129-1

TRANSCRIPT OF RECORD.

SUPREME COURT OF THE UNITED STATES.

OCTOBER TERM, 1885.

No. ~~379.~~ 108

CYRUS H. McCORMICK AND NETTIE FOWLER McCORMICK, EXECUTOR AND EXECUTRIX OF CYRUS H. McCORMICK, DECEASED, LEANDER J. McCORMICK, AND ROBERT H. McCORMICK, APPELLANTS,

vs.

PETER WHITMER, ADMINISTRATOR OF HUGH GRAHAM, DECEASED.

APPEAL FROM THE CIRCUIT COURT OF THE UNITED STATES FOR THE NORTHERN DISTRICT OF ILLINOIS.

FILED OCTOBER 12, 1885.

accession 23849

SUPREME COURT OF THE UNITED STATES.

OCTOBER TERM, 1887.

No. 379.

CYRUS H. McCORMICK AND NETTIE FOWLER McCORMICK, EXECUTOR AND EXECUTRIX OF CYRUS H. McCORMICK, DECEASED, LEANDER J. McCORMICK, AND ROBERT H. McCORMICK, APPELLANTS,

vs.

PETER WHITMER, ADMINISTRATOR OF HUGH GRAHAM, DECEASED.

APPEAL FROM THE CIRCUIT COURT OF THE UNITED STATES FOR THE NORTHERN DISTRICT OF ILLINOIS.

INDEX.

	Original.	Print.
Caption	1	1
Bond for costs	2	1
Bill of complaint	2	2
Subpœna	10	5
Marshal's return	12	6
Appearance for defendants	13	6
Answer to bill	14	7
Order granting leave to amend bill	20	10
Amended bill	21	10
Answer to amended bill	34	14
Replication	38	16
Order granting leave to amend answer	40	17
Order substituting solicitor for defendants	40	17
Order extending time to take proofs	41	17
Order granting leave to file amendment to answers, &c.	41	18
Amendment to answer	43	18
Order extending time to take proofs	48	20
Petition for rehearing	49	20
"Exhibit 1"—Affidavit of Frank Bramer	67	28

JUDD & DETWEILER, PRINTERS, WASHINGTON, FEBRUARY 7, 1888.

	Original.	Print.
Exhibit A—Diagram	69	29
Exhibit 1*a*—Affidavit of Albert Bramer	70	29
2— " Lewis Bramer	71	29
3— " Geo. W. Way	72	30
4— " Wm. Moore	73	30
4*a*— " O. Welshymer and L. Sturts	74	30
5—Assignment of Graham to Graham, Werden & Werden, Nov. 25, 1865	75	31
6—Affidavit of Harvey L. Hopkins	77	32
Affidavit of William Moore	80	33
Otto Welshymer	82	34
Levi Sturts	85	35
John Cooper	85	36
Charles H. Wood	87	37
Alvaro B. Graham	90	38
Hubert A. Banning	93	40
Ephraim Banning	96	41
Exhibit Bramer Letters—Letter of Frank Bramer to Banning & Banning, Oct. 20, 1879	101	44
Exhibit Bramer Affidavits—Affidavit of Frank M. Barber and Albert Bramer	103	44
Affidavit of Geo. W. Way	104	45
Affidavit of Lewis Bramer	104	45
Submission of motion for rehearing	106	46
Opinion of Judge Drummond delivered March 13, 1880	107	46
Interlocutory decree	122	53
Order granting leave to file bill of revivor	125	54
Bill of revivor	126	55
Subpœna	131	57
Marshal's return	132	58
Order making new parties defendants	134	59
Master's report	136	59
Complainant's exceptions to master's report	144	63
Defendants' " " "	146	64
Appearance of Parkinson & Parkinson as counsel for defendants	149	65
Hearing of defendants' exceptions	150	65
Submission of defendants' exceptions	151	66
Final decree	152	66
Allowance of appeals	154	67
Appeal bond (defendants')	155	67
Stipulation as to complainant's evidence	157	68
Evidence for complainant	157	68
Exhibits offered	158	69
Testimony of Wm. H. Lotz	158	69
Wm. H. Lotz (recalled)	169	72
Eli Wilder	238	96
Fenner W. Ward	244	99
J. Brown Porter	251	101
Alvaro B. Graham	261	105
Alvaro B. Graham (recalled)	345	134
Samuel I. Bradbury	366	141
James B. Welch	374	144

	Original.	Print.
Exhibit Bill—Bill of complaint in case of Graham *vs.* Werden *et al.*, filed in superior court of Cook county, Ills.	395	152
Exhibit A—Agreement between Graham and Werden *et al.*, Nov. 25, 1865	406	156
B—Assignment of Graham to Werden *et al.* Nov. 25, 1865	413	158
C—Agreement between Colahan and Werden *et al.*, April 27, 1878	416	159
D—Assignment of Colahan to McCormick, April 29, 1878	417	160
Exhibit Answer—Answer in case of Graham *vs.* Werden *et al.*, filed in superior court of Cook county, Ills.	418	160
Exhibit A—Agreement between Colahan and Werden *et al.*, April 27, 1878	427	164
B—Assignment of Colahan to McCormick, April 29, 1878	428	164
Evidence for complainant before the master	433	166
Statement of the profits growing out of the manufacture and sale of sundry mowing machines, both plain and combined, by C. H. & L. J. McCormick, said machines being involved in the Graham suit	434	167
Testimony of Wm. J. Hanna	436	168
Alvaro B. Graham	453	177
Edward G. Franks	521	211
Leander J. McCormick	525	214
Wm. J. Hanna (recalled)	527	214
Marcellus A. Morse	532	216
Extract from defendants' circular and pamphlets	542	221
Exhibit McCormick Patent—Letters patent No. 193,770 granted C. H. & L. J. McCormick, July 31, 1877	559	229
Exhibit Welsh Memoranda—Notes of conversations between James B. Welch and Wm. Werden, Sept. 11 to 16, 1869	576	234
Graham Exhibit B—Assignment of patent-right from A. B. Graham to Hugh Graham, Aug. 12, 1870	578	235
Graham Exhibit C—Agreement between A. B. Graham and Geo. Cleveland, Feb. 4, 1864	581	236
Exhhibit Waterman's License—Agreement between A. B. Graham and A. S. Waterman, Jan. 29, 1870	593	239
Exhibit Power of Attorney No. 1—Power of attorney from Hugh Graham to A. B. Graham, Jan. 9, 1873	597	242
Exhibit Power of Attorney No. 2—Power of attorney from Hugh Graham to A. B. Graham, Jan. 22, 1881	599	243
Exhibit Wayne Company's License—Agreement between A. B. Graham, Hugh Graham, and The Wayne Ag'l Co., Nov. 21, 1878	600	244
Exhibit Wayne Company Agreement—Agreement between A. B. Graham, Hugh Graham, and The Wayne Ag'l Co., Nov. 21, 1878	602	245
Exhibit Wayne Company's Letter—Letter of Wayne Ag'l Co. to M. A. Morse, Sept. 7, 1878	603	246

	Original.	Print.
Exhibit Ann Arbor Company License—Agreement between Hugh and A. B. Graham and The Ann Arbor Ag'l Co., Sept. 10, 1880	603	246
Exhibit Geneva Lake Company License—Agreement between Hugh and A. B. Graham and The Geneva Lake Crawford M'f'g Co., Jan 27, 1881	606	247
Exhibit Remington License—Agreement between Hugh and A. B. Graham and The Remington Ag'l Co., June 13, 1881	608	249
Exhibit Burrell Assignment—Assignment of Hugh and A. B. Graham to David H. Burrell, Aug. 4, 1881	612	251
Exhibit Glass Agreement—Agreement between Hugh and A. B. Graham and Albert J. Glass and The Janesville Machine Co., Jan. 13, 1882	614	253
Exhibit Johnston Release—Agreement between Hugh and A. B. Graham and The Johnston Harvester Co., Ap'l 11, 1882	616	254
Exhibit Wayne Company's Notice—Notice of Hugh and A. B. Graham to Wayne Ag'l Co., Dec. 6, 1880	618	255
Exhibit Wayne Company Settlement—Agreement between Hugh and A. B. Graham and Wayne Ag'l Co., Jan. 13, 1882	618	255
Exhibit Banning's Letter—Letter of Banning & Banning to C. H. and L. J. McCormick, M'ch 19, 1881	621	257
Exhibit Geneva Lake Suit—Transcript from C. C. U. S. for eastern district of Wis., in case of Graham *vs.* Geneva Lake Crawford Man'f'g Co.	621	257
Master's report	621	257
Exceptions of defendant to master's report	625	259
Decree	627	260
Opinion	629	261
Clerk's certificate	632	264
Exhibit Wayne Company Suit—Transcript from C. C. U. S. for district of Indiana in case of Graham *et al. vs.* Wayne Ag'l Co. *et al.*	633	264
Bill of complaint	633	264
Exhibit A—Agreement, Nov. 21, 1878	644	271
B— " " "	645	272
C—Notice, Dec. 6, 1880	646	272
Answer	647	273
Clerk's certificate	654	277
Exhibit Saxton License—Agreement between Jas. A. Saxton and C. H. and L. J. McCormick, Feb. 19, 1874	655	277
Exhibit Files of McCormick Patent—File wrapper and contents in matter of application for a patent of Leander J. McCormick *et al.*	658	279
Stipulation as to testimony	672½	289
Evidence for defendants	673	290
Exhibits offered	673	290
Testimony of David J. Powers	676	291
Wm. R. Baker	715	308
Wm. John Hanna	721	311
Wm. B. Werden	728	314
Cyrus A. Werden	736	319
Richard W. Dooly	738	320

	Original.	Print.
Testimony of Slauson Minskey	752	328
Geo. K. Stearns	761	333
Merritt Green, Jr.	767	337
Contract Exhibit W. B. Werden—Agreement between A. B. Graham and Wm. B. and Cyrus A. Werden, Nov. 25, 1865	772	340
Evidence for complainant in rebuttal	777	343
Testimony of Charles Dewey	777	343
Isaac N. Wood	780	344
Letters of B. F. Thurston to Bannings, Feb. 1, March 26, and April 23, 1878	782	345
Documentary evidence	787	347
Letters patent No. 13523 granted Jonathan Haines Sept. 4, 1855	787	347
Drawings of reissue letters patent No. 2986 granted Jonathan Haines June 16, 1868	792	350
Letters patent No. 18141 granted G. C. Dolph Sept. 8, 1857	796	350
Letters patent No. 20180 granted Lewis Miller, assignor, &c., May 4, 1858	798	352
"Def'ts' Exhibit Stetson & Maynard Patent No. 24063," granted May 17, 1859	800	355
Reissue letters patent No. 766 granted Lewis Miller, assignor, &c., July 19, 1859	804	358
Letters patent No. 25697 granted David Zug Oct. 4, 1859	806	361
"Def'ts' Exhibit Ball Patent No. 25797," granted E. Ball Oct. 18, 1859	814	364
Letters patent No. 34545 granted Stephen S. Bartlett, assignor, &c., Feb. 25, 1862	822	368
Letters patent No. 47807 granted J. A. Dodge May 23, 1865	825	371
Letters patent No. 50956 granted Ray & Grant Nov. 14, 1865	828	374
Letters patent No. 51546 granted F. Bramer Dec. 19, 1865	830	376
Letters patent No. 61228 granted McCormick & Erpelding, Jan. 15, 1867	832	378
Letters patent No. 61644 granted Andrew Wemple Jan. 29, 1867	834	382
Letters patent No. 67041 granted Graham & Werder July 23, 1867 (omitted in printing)	836	—
Letters patent No. 67041 granted Graham & Werden, July 23, 1867	840	385
Defendants' Exhibit file wrapper and contents to patent No. 74342 granted A. B. Graham Feb. 11, 1868	846	389
Defendants' Exhibit Graham & Werden file wrapper to patent No. 67041 granted July 23, 1867	890	406
Evidence for defendants before the master	916	413
Testimony of Levi L. Lawrence	916	413
W. J. Hanna	927	419
James B. Nethercut	932	422
Charles Dewey	943	427
Samuel Johnston	950	430
David H. Burrell	957	433
Albert M. Ross	968	439
M. E. Elliott	976	444
Geo. L. Cook	978	444

	Original.	Print.
Exhibit F. C. T.—License from Grahams to Wayne Ag'l Co., Jan. 13, 1882	987	449
F. C. T.—License from Linthicum to Wayne Ag'l Co., Jan. 13, 1882	989	450
3 (L. L. Lawrence)—Notes of Wayne Ag'l Co., Jan. 13, 1882	991	451
4 (L. L. Lawrence)—Receipt of Grahams to Wayne Ag'l Co., Jan. 13, 1882	994	452
A (J. A. Nethercut)—Release of Grahams to Geneva Lake Crawford M'f'g Co. *et al.*, Sept. 28, 1881	995	452
B (J. A. Nethercut)—Letter of Banning & Banning to Flanders & Bottarm, March 25, 1879	997	453
C (J. A. Nethercut)—Release from Grahams to Sprague Mowing Machine Co., May 6, 1878, &c.	998	454
Evidence for complainant before the master	1002	456
Testimony of A. B. Graham (recalled)	1002	456
Wm. Deering	1010	459
Clerk's certificate	1014	461
Stipulation to correct record	1015	462

1 Pleas in the circuit court of the United States for the northern district of Illinois, held at the United States court-rooms in the city of Chicago, in the district aforesaid, before the judges thereof, on Monday, the twenty-seventh day of April, in the adjourned March term of said court, in the year of our Lord one thousand eight hundred and eighty-five, and of our Independence the one hundred and ninth year.

WILLIAM H. BRADLEY, *Clerk.*

NORTHERN DISTRICT OF ILLINOIS, *ss:*

HUGH GRAHAM
vs.
CYRUS H. MCCORMICK, LEANDER J. MCCORMICK, and ROBERT H. MCCORMICK. } In Chancery.

Be it remembered that on the eighth day of June, 1877, came the complainant, by his solicitors, and filed in the office of the clerk of the circuit court of the United States for the northern district of Illinois, at Chicago, in said district, his bond for costs and bill of complaint in said entitled cause; which said bond and bill are, respectively, in the words and figures following, to wit:

2 *Bond.*

UNITED STATES OF AMERICA, *Northern District of Illinois,* } *ss:*

Circuit Court. May Term, A. D. 1877. In Equity.

HUGH GRAHAM

vs.

CYRUS H. MCCORMICK, LEANDER J. MCCORMICK, & ROBERT H. MCCORMICK.

I enter myself security for costs in this cause, and promise to pay all costs which may accrue to the opposite party in this action or to any of the officers of this court, and in default of payment by the plaintiff of any costs ordered or adjudged to be paid by him I hereby agree and stipulate that execution may issue against my property for any costs taxed against him.

Dated this eighth day of June, A. D. 1877.

EPHRAIM BANNING.

Endorsed: Filed June 8th, A. D. 1877. Wm. H. Bradley, clerk.

Bill.

Circuit Court of the United States for the Northern District of Illinois, in the Seventh Circuit.

To the honorable the judges of the circuit court of the United
3 States for the northern district of Illinois, in the seventh circuit:

Hugh Graham, of Bloomington, in the county of McLean and State of Illinois, brings this bill against Cyrus H. McCormick, Leander J. McCormick, and Robert H. McCormick, copartners, etc., of the city of Chicago, in the county of Cook and State of Illinois, and citizens of the State of Illinois; and thereupon your orator complains and says that heretofore, and before the 11th day of February, A. D. 1868, Alvaro B. Graham was the original, true, and first inventor of a new and useful improvement in harvesters which had not been known or used by others before the invention thereof by him, and being so as aforesaid the true, original, and first inventor of the said improvement, and being also a citizen of the United States, had made application, in due form of law in all respects, to the Commissioner of Patents for letters patent therefor; and having fully and in all respects complied with all the requirements of the law in that behalf, and especially having made oath that he was a citizen of the United States and that he verily believed himself to be the original, true, and first inventor of the said improvement, and that the same, to the best of his knowledge and belief, had not previously been
4 known or used, and having also paid into the Treasury of the United States the sum of $35.00, and presented a petition to the Commissioner of Patents signifying a desire of obtaining an exclusive property in the said invention and praying that letters patent might for that purpose be granted unto him, whereupon the Commissioner of Patents caused letters patent to be made out in the name of the United States of America, in due form of law, and bearing date the 11th day of February, A. D. 1868, signed by W. T. Otto, acting Secretary of the Interior of the United States, and countersigned and sealed with the seal of the Patent Office by A. M. Stout, acting Commissioner of Patents of the United States, whereby there was granted and secured unto the said Alvaro B. Graham, his heirs, administrators, and assigns, for the term of seventeen years from the date thereof, the full and exclusive right of making, constructing, using, and vending to others to be used the said invention, which is entitled in said letters patent "improvement in harvesters," and a description whereof is given, in the words of the said Alvaro B. Graham, in a schedule attached to said letters patent and making a part of the same, as by reference to said letters patent or a certified copy thereof, here in court to be produced if required, will more fully and at large appear.

5 And your orator further shows unto your honors that by an instrument in writing, under his hand and seal, duly executed and bearing date the 12th day of August, A. D. 1870, the

said Alvaro B. Graham assigned, sold, and set over unto your orator all his, the said Alvaro B. Graham's, right, title, and interest in and to said letters patent above mentioned and the invention thereby secured, which said deed of assignment was duly recorded in the United States Patent Office at Washington on the 12th day of September, A. D. 1870, in Liber H 13, page 329 of transfers of patents, as by reference to said deed here in court to be produced will more fully and at large appear.

And your orator further shows unto your honors that he is in the full enjoyment of the rights and interests acquired by him as aforesaid, and that said rights and interests are of great value, and that your orator is entitled to all the damages occasioned by the infringement of the said letters patent by the manufacture, sale, or use of the said improvement in harvesters made in violation of the said letters patent, and is by law entitled to sue for and receive the same to his own use.

And your orator further shows unto your honors that he believes and therefore charges the fact to be that the said Alvaro B.
6 Graham was the original and first inventor and discoverer of the improvement in harvesters patented by him and described and claimed in said letters patent as aforesaid, and that the same was not known or used by any other persons before the invention and discovery thereof by him, the said Alvaro B. Graham.

And your orator further shows unto your honors that Cyrus H. McCormick, Leander J. McCormick, and Robert H. McCormick, the defendants herein, are making and selling, to wit, at the district aforesaid, the said improvements in harvesters described and claimed in said letters patent No. 74342 and secured by the first claim thereof, in violation and infringement of said letters patent, and that no right or license or authority of any kind has ever been granted to them or any of them to make or sell said improvement in harvesters by the said Alvaro B. Graham or your orator, and that your orator has reason to believe that said defendants will continue to make and sell the said improvement in harvesters and refuse to pay to your orator any of the profits which they have made by such unlawful manufacture and sale of said improvement or to desist from the making and selling the same in violation and infringement of your orator's rights secured to him as aforesaid and against his consent and allowance.

In consideration whereof and forasmuch as your orator
7 can only have adequate relief in the premises in this honorable court, where matters of this nature are properly cognizable and relievable:

To the end, therefore, that the said Cyrus H. McCormick, Leander J. McCormick, and Robert H. McCormick, defendants, may, if they can, show why your orator should not have the relief hereby prayed and may, upon their corporal oaths or upon the corporal oath of one of them, according to the best and utmost of their knowledge, remembrance, information, and belief, full, true, direct, and perfect answer make to such of the several interrogatories hereinafter num-

bered and set forth as by the note hereunder written they are required to answer—that is to say:

1. Whether the said defendants or any of them are or have been manufacturing or selling the improvement in harvesters or machines embracing the improvement in harvesters described and patented in said letters patent No. 74342 and particularly mentioned in the first claim thereof.

2. How long have said defendants been manufacturing or selling machines embracing the improvement in harvesters above described, and where and how many of such machines the said defendants have manufactured or sold.

8 And that said defendants may answer the premises and may be decreed to account with and pay over to your orator the profits which they have made by such unlawful manufacture or sale of said improvement in harvesters.

And may it please your honors, the premises considered, to grant unto your orator the writ of injunction, issuing out of and under the seal of this honorable court or issued by one of your honors according to the form of the statute in such cases made and provided, perpetually enjoining and restraining the said Cyrus H. McCormick, Leander J. McCormick, and Robert H. McCormick, defendants, their clerks, attorneys, agents, servants, and workmen, from directly or indirectly making or selling the said improvement in harvesters described and claimed in said letters patent No. 74342 or machines embracing the same.

And may it please your honors to grant unto your orator a provisional or preliminary injunction enjoining and restraining the said Cyrus H. McCormick, Leander J. McCormick, and Robert H. McCormick, defendants, their clerks, attorneys, agents, servants, and workmen, to the same purport, tenor, and effect hereinbefore prayed for in regard to said perpetual injunction.

9 And may it please your honors to grant unto your orator a writ of subpœna of the United States of America, issuing out of and under the seal of this honorable court, directed to the said Cyrus H. McCormick, Leander J. McCormick, and Robert H. McCormick, defendants, commanding them and each of them, on a day certain therein to be named and under a certain penalty, to be and appear in this honorable court, then and there to answer all and singular the premises and to stand to, perform, and abide such further order, direction, and decree as may be made against them, and that your orator may have such other and further relief in the premises as the nature of the circumstances of his case may require and as to your honors may seem meet; and your orator, as in duty bound, will ever pray, etc.

HUGH GRAHAM.

BANNING & BANNING,
Sol'rs for Complainant.

UNITED STATES OF AMERICA, } ss:
Northern District of Illinois, }

Hugh Graham, being first duly sworn, upon oath says that he is the complainant in the foregoing bill named; that he has read said bill and knows the contents thereof, and that the same is true of his own knowledge, except as to the matters therein stated on information and belief, and as to such matters he believes it to be
10 true, and that he verily believes the said Alvaro B. Graham to have been the first and original inventor of the improvement in harvesters claimed in said letters patent No. 74342, and that the same had not been in use or described before the invention and discovery thereof by him, the said Alvaro B. Graham.

HUGH GRAHAM.

Sworn to before me this 2d day of June, A. D. 1877.
[SEAL.] JOHN A. FULWILER,
Notary Public.

The defendants are required to answer the interrogatories in the foregoing bill of complaint, numbered, respectively, one and two.

Endorsed: Filed June 8, 1877. Wm. H. Bradley, cl'k.

On the same day, to wit, on the eighth day of June, 1877, there issued out of said clerk's office a writ of subpœna in said entitled cause; which said writ, together with the return of the marshal endorsed thereon, is in the words and figures following, to wit:

Subpœna.

UNITED STATES OF AMERICA, } ss:
Northern District of Illinois, }

11 The United States of America to Cyrus H. McCormick, Leander J. McCormick, and Robert H. McCormick, Greeting:

We command you and every of you that you appear before our judges of our circuit court of the United States of America for the northern district of Illinois, at Chicago, in said district, on the first Monday in the month of July next, to answer the bill of complaint of Hugh Graham, this day filed in the clerk's office of said court, in said city of Chicago, then and there to receive and abide by such judgment and decree as shall then or thereafter be made, upon pain of judgment being pronounced against you by default.

To the marshal of the northern district of Illinois to execute.

Witness the Hon. Morrison R. Waite, Chief Justice of the Supreme Court of the United States of America, at Chicago aforesaid, this eighth day of June, in the year of our Lord one thousand eight hundred and seventy-seven, and of our Independence the 101st.

[SEAL.] WM. H. BRADLEY, *Clerk.*

Memorandum.

The above-named defendants are notified that unless they and each of them shall enter their appearance in the clerk's office
12 of said court, at Chicago aforesaid, on or before the day to which the above writ is returnable the complainant's bill will be taken against them as confessed and a decree entered accordingly.

WM. H. BRADLEY, *Clerk.*

Marshal's Return.

I have served the within writ within my district in the following manner, to wit: Upon Cyrus H. McCormick, therein named, on the 9th day of June, A. D. 1877, by personally delivering to him a true copy of the same on the aforesaid day. I also served the same upon the following-named defendants, not having been able to find them to serve personally, by leaving a true copy for each of them at their usual place of abode with an adult person and a member of their respective families, to wit: Upon Leander J. McCormick, on the 9th day of June, A. D. 1877, with Tena Erickson; also upon Robert H. McCormick, on the 9th day of June, A. D. 1877, with Thomas Boyd.

JESSE S. HILDRUP,
U. S. Marshal,
By A. C. CAMPBELL, *Deputy.*

Endorsed: Filed June 15th, A. D. 1877. Wm. H. Bradley, clerk.

13 Afterwards, to wit, on the second day of July, 1877, came the defendants, by their solicitors, and filed in said clerk's office their appearance in said entitled cause; which said appearance is in the words and figures following, to wit:

Appearance.

United States Circuit Court, Northern District of Illinois. In Chancery.

— GRAHAM

vs.

CYRUS H. MCCORMICK, LEANDER J. MCCORMICK, & ROBERT H. MCCORMICK.

We hereby appear as solicitors for the defendants in this cause and request the clerk to enter our appearance accordingly.
Dated June 30, 1877.

GOODWIN, OFFIELD & TOWLE,
Defendants' Solicitors.

To Wm. H. Bradley, Esq., clerk.

Endorsed: Filed Jul. 2, 1877. Wm. H. Bradley, clerk.

14 Afterwards, to wit, on the twenty-sixth day of July, 1877, came the defendants, by their solicitors, and filed in said clerk's office their answer in said entitled cause; which said answer is in the words and figures following, to wit:

Answer.

United States Circuit Court, Northern District of Illinois. In Chancery.

The joint and several answer of Cyrus H. McCormick, Leander J. McCormick, and Robert H. McCormick, defendants, to the bill of complaint of Hugh Graham, complainant.

These defendants, now and at all times, saving and reserving to themselves all and all manner of benefit and advantage of exception to the many errors and insufficiencies in the complainant's said bill contained, for answer thereunto or to so much and such parts thereof as these defendants are advised is material and necessary for them to make answer unto, answering, say:

That these defendants are informed by the records of the Patent Office, and therefore admit, that letters patent of the United States were granted to Alvaro B. Graham for improvement in harvesters, dated February 11th, 1868, as in that behalf in said bill alleged.

15 And these defendants, further answering, say that they have no knowledge save that derived from said bill as to the alleged assignment of said letters patent to the complainant, and they therefore do not admit the same, but leave him to such proof thereof as he may be advised.

And these defendants, further answering, say that they have no knowledge save that derived from said bill as to whether the complainant has been in the enjoyment of the rights and interests supposed to be secured by said letters patent, nor whether the same are of value, nor whether the complainant is entitled to damages occasioned by the alleged infringement of said letters patent, nor whether he is entitled to sue for and receive the same to his own use, and they therefore do not admit the allegations of the bill as to these matters, but leave the complainant to such proof thereof as he may be advised.

And these defendants, further answering, say that they deny, on information and belief, that the said Alvaro B. Graham was the original and first inventor or discoverer of the inventions and devices in harvesters in the said letters patent contained, issued to him as alleged in said bill of complaint.

And these defendants, pursuant to the statute in such case made and provided, now set forth and state, on information and belief, that, previous to any pretended invention thereof by the said

16 Alvaro B. Graham, the said inventions and things patented or some substantial and material part thereof were set forth

and described in the following-mentioned letters patent of the United States, viz:

Letters patent granted to G. C. Dolph, dated September 8, 1857, No. 18141.

Letters patent granted to David Zug, dated October 4, 1859, No. 25697.

Letters patent granted to John A. Dodge, dated May 23, 1865, No. 47807.

Letters patent granted to Stephen S. Bartlett, assignor to himself and Thomas H. Dodge, dated February 25, 1862, No. 34545.

Letters patent granted to W. De Witt, dated January 7, 1862, No. 34090.

Letters patent granted to E. Ball, dated October 18, 1859, No. 25797.

Letters patent granted to C. Aultman & Co., assignees of Lewis Miller, dated May 4, 1858.

Letters patent, reissue No. 766, granted to C. Aultman & Co., assignees of Lewis Miller, dated July 19, 1859.

Letters patent granted to Jonathan Haines, dated September 4, 1855, No. 13523.

Letters patent granted to Leander J. McCormick and Lambert Erpelding, assignors to Leander J. McCormick, dated January 15, 1867, No. 61228.

Letters patent granted Cyrenius Wheeler, Jr., dated March 12, 1861, No. 31686.

Letters patent granted to Cyrenus Wheeler, Jr., dated February 9, 1864, No. 41556.

Letters patent granted to David R. Paiste, dated June 5, 1866, No. 55427.

17 Letters patent granted to Edwin Jones, assignor of Charles Tinker and J. A. Sprague, dated August 4, 1857, No. 17945; reissued May 23, 1865, as No. 1964.

Letters patent granted to D. B. Lucky, dated September 13, 1864, No. 44259.

Letters patent granted to John P. Manny, dated March 25, 1862, No. 34760.

Letters patent granted to Samuel Buser and John H. Buser, dated February 14, 1860, No. 27105.

Letters patent granted to George Esterly, dated January 22, 1861, No. 31158.

Letters patent granted to E. P. Russell, dated February 14, 1865, No. 46394.

Letters patent granted to Frank T. Lomont and John Grojean, dated March 27, 1860, No. 27641.

Letters patent granted to Lindley M. Balty, dated September 19, 1865, No. 49963.

Letters patent granted to Frank Bramer, dated December 19, 1865, No. 51546.

Letters patent granted to Andrew Wemple, dated January 29, 1867, No. 61644.

Amended by leave granted April 15, 1878.

Letters patent granted A. B. Graham, assignor to himself and William B. and Cyrus A. Warden, dated July 23, 1867, No. 67041, for harvesters.

And these defendants, further answering, say, on information and belief, that they deny that they have made or sold any machines containing the said improvements set forth and claimed in said letters patent or the first claim thereof or substantially the
18 same in construction and operation, and if the machines of these defendants which they have made and offered for sale contain any feature in common with the inventions set forth in said letters patent No. 74342 that the said features are also found in common in the aforesaid patents and inventions hereinbefore alleged as prior in time to the said inventions and devices in said complainant's bill set forth.

And these defendants, further answering, say that they have already answered the interrogatories propounded in said bill of complaint.

And these defendants deny all and all manner of combination and confederation in said bill alleged, without this, that any other matter or thing in said bill contained and not herein and hereby fully admitted, traversed, or denied is true to the knowledge, information, remembrance, or belief of these defendants, and this they are ready to verify; wherefore they pray to be hence dismissed with their costs and charges most wrongfully sustained.

C. H. McCORMICK.
L. J. McCORMICK.
R. H. McCORMICK.

GOODWIN, OFFIELD & TOWLE,
Sol'rs for Def'ts.

UNITED STATES OF AMERICA, }
Northern District of Illinois, } *ss:*

19 Leander J. McCormick, being duly sworn, says that he is one of the defendants in the bill of complaint in this cause mentioned; that he has read the foregoing answer signed by him and knows the contents thereof, and that the same is true of his own knowledge, except such matters as are therein stated on information and belief, and as to such matters he believes the same to be true.

LEANDER J. McCORMICK.

Subscribed and sworn to this 25th day of July, A. D. 1877, before me—

JOHN H. WHIPPLE,
Notary Public.

Endorsed: Filed July 26, '77. Wm. H. Bradley, clerk.

20 Afterwards, to wit, on the fourth day of August, in the July term of said court, 1877, in the record of the proceedings thereof in said entitled cause, before Hon. Thomas Drummond, circuit judge, is the following entry, to wit:

Order.

HUGH GRAHAM
vs.
CYRUS H. MCCORMICK *et al.* } In Chancery.

On motion, leave is given complainant by the court to amend his bill of complaint herein and the defendants are ruled to answer herein within fifteen days.

On the same day, to wit, on the fourth day of August, 1877, came the complainant, by his solicitors, and filed in said clerk's office his amended bill in said entitled cause, which said amended bill is in the words and figures following, to wit:

21 *Amended Bill.*

Circuit Court of the United States for the Northern District of Illinois, in the Seventh Circuit.

To the honorable the judges of the circuit court of the United States for the northern district of Illinois, in the seventh circuit:

Hugh Graham, of Bloomington, in the county of McLean and State of Illinois, by leave of the court first had and obtained, brings this his amended bill of complaint against Cyrus H. McCormick, Leander J. McCormick, and Robert H. McCormick, copartners, etc., of the city of Chicago, in the county of Cook and State of Illinois, and citizens of the State of Illinois.

And thereupon your orator, complaining, says:

That heretofore and before the 11th day of February, A. D. 1868, Alvaro B. Graham was the original, true, and first inventor of a new and useful improvement in harvesters which had not been
22 known or used by others before the invention thereof by him, and, being so as aforesaid the true, original, and first inventor of said improvement and being also a citizen of the United States, had made application, in due form of law in all respects, to the Commissioner of Patents for letters patent therefor, and having fully and in all respects complied with all the *ac*quirements of the law in that behalf, and especially having made oath that he was a citizen of the United States and that he verily believed himself to be the original, true, and first inventor of the said improvement, and that the same, to the best of his knowledge and belief, had not previously been known or used, and having also paid into the Treasury of the United States the sum of $35.00 and presented a petition to the Commissioner of Patents signifying a desire of obtaining an exclusive prop-

erty in the said inventions, and praying that letters patent might for that purpose be granted unto him, whereupon the Commissioner of Patents caused letters patent to be made out in the name of the United States of America in due form of law and bearing date the 11th day of February, A. D. 1868, signed by W. T. Otto,
23 acting Secretary of the Interior, and countersigned and sealed with the seal of the Patent Office by A. M. Stout, acting Commissioner of Patents of the United States, whereby there was granted and secured unto the said Alvaro B. Graham, his heirs, administrators, and assigns, for the term of seventeen years from the date thereof, the full and exclusive right of making, constructing, using, and vending to others to be used the said invention, which is entitled in said letters patent "improvements in harvesters," and a discription whereof is given, in the words of the said Alvaro B. Graham, in a schedule attached to said letters patent and making a part of the same, as by reference to said letters patent or a certified copy thereof, here in court to be produced if required, will more fully and at large appear.

And your orator further shows unto your honors that by an instrument in writing under his hand and seal, duly executed and bearing date the 12th day of August, A. D. 1870, the said Alvaro B. Graham assigned, sold, and set over unto your orator all his,
24 the said Alvaro B. Graham's, right, title, and interest in and to said letters patent above mentioned and the invention thereby secured, which said deed of assignment was duly recorded in the United States Patent Office at Washington on the 12th day of September, A. D. 1870, in Liber H 13, page 329, of transfers of patents, as by reference to said deed, here in court to be produced, will more fully and at large appear.

And your orator further shows unto your honors that he is in the full enjoyment of the rights and interests acquired by him as aforesaid, and that said rights and interests are of *of* great value, and that your orator is entitled to all the damages occasioned by the infringement of the said letters patent by the manufacture, sale, or use of the said improvement in harvesters made in violation of the said letters patent, and is by law entitled to sue for and receive the same to his own use.

And your orator further shows unto your honors that he believes and therefore charges the fact to be that the said Alvaro B. Graham was the original and first inventor and discoverer of the im-
25 provement in harvesters patented by him and described and claimed in said letters patent as aforesaid, and that the same was not used or known by any other persons before the invention and discovery thereof by him, the said Alvaro B. Graham.

And your orator further shows unto your honors that on or about the 11th day of December, A. D. 1874, he filed his bill of complaint against Elijah H. Gammon and William Deering in the circuit court of the United States for the northern district of Illinois, setting forth, among other things, the said letters patent No. 74342, of the 11th day of February, A. D. 1868, and the infringement of the said letters patent by the defendants in said suit.

And the said defendants afterwards filed their answer and amended answer to the said bill of complaint denying, among other things, the validity of the said letters patent, and set up that the invention or improvement in harvesters secured by the first and second claims thereof had been previously invented or discovered by other persons than the said Alvaro B. Graham, and described in numerous
26 letters patent of the United States issued before the date of said letters patent No. 74342 therein particularly mentioned, and issue being joined therein the parties proceeded to take proofs, which were taken at great length and for a long time.

And your orator further shows unto your honors that the proofs in said cause being taken and certified copies of all of said letters patent mentioned in said answer and amended answer, together with certified copies of the letters patent granted to Andrew Wemple, No. 61644, dated January 29, A. D. 1867, and the file wrapper and contents of said letters patent No. 74342 being offered in evidence, the cause was brought to a hearing on its merits in the month of May, A. D. 1877, before Justice Henry W. Blodgett, and was *agreed* before him by the counsel of the respective parties and was held under advisement by the said justice until the month of July, A. D. 1877, when the judgment of said court was pronounced.

And the said court decided, among other things, that the said letters patent No. 74342 were valid in law so far as regards
27 the first and second claims thereof and were not anticipated or rendered void for want of novelty by anything appearing in the evidence in said cause, and that the said Alvaro B. Graham was the original and first inventor of the improvement in harvesters secured by the first and second claims of said letters patent No. 74342, and by a decree entered in said cause ordered an account to be taken of the profits received by the defendants and the damages sustained by the complainant by reason of the infringements already committed by the said defendants, as by reference to the record of the proceedings in said suit will more fully and at large appear.

And your orator further shows unto your honors, that Cyrus H. McCormick, Leander J. McCormick, and Robert H. McCormick, the defendants herein, are and have been making and selling, to wit, at the district aforesaid, the said improvement in harvesters described and claimed in said letters patent No. 74342 and secured by the first and second claims thereof, and are and have been making and selling machines embodying said improvement in
28 *in* harvesters and having the same on them as a part thereof, in violation and infringement of said letters patent and the exclusive rights of your orator under the same, and that no right or license or authority of any kind has ever been granted to them or any of them to make or sell said improvement in harvesters by the said Alvaro B. Graham or your orator, and that your orator has reason to believe that said defendants will continue to make and sell machines embodying the said improvement in harvesters and refuse to pay to your orator any of the profits which they have made by such unlawful manufacture and sale of said improvement or to desist from the making and selling the same in violation and

infringement of your orator's rights secured to him as aforesaid and against his consent and allowance.

And your orator further represents and charges that the said Cyrus H. McCormick, Leander J. McCormick, and Robert H. McCormick have made and received and are making and receiving large profits and gains and advantages by the manufacture and
29 sale of machines embodying said improvements in harvesters and having the same on them as a part thereof, and by the infringement of said letters patent and the exclusive rights of your orator under the same by the manufacture and sale of said machines, and that by reason of the infringement of said letters patent as aforesaid your orator has sustained great damages in the premises.

In consideration whereof, and forasmuch as your orator can only have adequate relief in the premises in this honorable court, where matters of this nature are properly cognizable and relievable—

To the end, therefore, that the said Cyrus H. McCormick, Leander J. McCormick, and Robert H. McCormick, defendants, may, if they can, show why your orator should not have the relief hereby prayed, and may, upon their corporal oaths or upon the corporal oath of one of them, according to the best and utmost of their knowledge, remembrance, information, and belief, full, true, direct, and perfect answer make to such of the several interrogatories hereinafter numbered and set forth as by the note hereinunder
30 written they are required to answer—that is to say:

1. Whether the said defendants or any of them *are to* have been manufacturing or selling the improvement in harvesters described and patented in said letters patent No. 74342 and particularly mentioned in the first and second claims thereof or in either of said claims.

2. How long have said defendants been manufacturing or selling machines embodying the improvement in harvesters above described, and how many of such machines they have manufactured and sold.

And that said defendants may answer the premises and may be decreed to account with and pay over to your orator the profits which they have made by such manufacture or sale of said improvement in harvesters, and also all the damages which your orator has sustained by reason of said infringement of said letters patent and his exclusive rights under the same.

And may it please your honors, the premises considered, to grant unto your orator the writ of injunction, issuing out of and
31 under the seal of this honorable court or issued by one of your honors, according to the statute in such cases made and provided, perpetually enjoining and restraining the said Cyrus H. McCormick, Leander J. McCormick, and Robert H. McCormick, defendants, their clerks, attorneys, agents, servants, and workmen, from directly or indirectly making or selling the said improvement in harvesters described and claimed in said letters patent No. 74342 or machines embracing the same.

And may it please your honors to grant unto your orator a provisional or preliminary injunction enjoining and restraining the said Cyrus H. McCormick, Leander J. McCormick, and Robert H. McCormick, defendants, and workmen to the same purport, tenor, and effect hereinbefore prayed for in regard to said perpetual injunction, and that your orator may have such other and further relief in the premises as the nature of the circumstances of his case may require and as to your honors may seem meet.

And your orator, as in duty bound, will every pray, etc.

HUGH GRAHAM.

BANNING & BANNING,
Sol's for Complainant.

32 UNITED STATES OF AMERICA, }
Northern District of Illinois, } *ss:*

Hugh Graham, being first duly sworn, upon oath says that he is the complainant in the foregoing bill named; that he has read said bill and knows the contents thereof, and that the same is true, of his own knowledge, except as to the matters therein stated on information and belief, and as to such matters he believes it to be true, and that he verily believes the said Alvaro B. Graham to have been the first and original inventor of the improvement in harvesters claimed in said letters patent No. 74342, and that the same had not been in use or described before the invention and discovery thereof by him, the said Alvaro B. Graham. HUGH GRAHAM.

Sworn to before me this 2nd day of August, A. D. 1877.
[SEAL.] JOHN A. FULWILER,
Notary Public.

Endorsed: Filed Aug. 4, 1877. Wm. H. Bradley, clerk.

33 Afterwards, to wit, on the twentieth day of August, 1877, came Cyrus H., Leander J., and Robert H. McCormick, by their solicitors, and filed in said clerk's office their answer to the amended bill of complaint in said entitled cause; which said answer is in the words and figures following, to wit:

34 *Answer to Amended Bill of Complaint.*

United States Circuit Court, Northern District of Illinois. In Chancery.

HUGH GRAHAM
vs.
CYRUS H. MCCORMICK, LEANDER J. MCCORMICK, and ROBERT H. MCCORMICK.

The answer of the above-named defendants, Cyrus H., Leander J., and Robert H. McCormick, to the amended bill of complaint of the said complainant, Hugh Graham.

These defendants, for answer to said amended bill, crave leave to refer to their answer in this cause filed to the said complainant's

original bill, and ask that the said answer may be taken and considered as the answer of these defendants to the said amended bill of complaint, so far as applicable to the same.

And, further answering, they say that they are not advised, as in and by the said amended bill, whether or not the said com-
35 plainant filed his bill of complaint in this court against Elijah H. Gammon and William Deering, or whether the said Gammon and Deering answered the same, or whether any proofs were taken thereon, or whether the court decided, among other things, that the said letters patent No. 74342 were valid in law so far as regards the first and second claims thereof, as in and by said amended bill alleged and claimed.

But these defendants say that they were neither party nor privy to any such suit or proceeding in which the validity of the said letters patent was in controversy, and they insist that they are not bound by any such suit or proceeding to which they were not party or privy.

And these defendants, answering the interrogatories in said amended bill contained, say, on information and belief, to the first and second interrogatories that they deny that these defendants or any of them are or ever have been manufacturing or selling the improvement in harvesters described and patented in said letters patent No. 74342 and particularly mentioned in the first and
36 second claims thereof or in either of said claims.

And, further answering, these defendants deny that the said complainant has sustained any damages by reason of any infringement of said letters patent and his exclusive rights under the same by these defendants.

That they deny any and all infringement thereof by them, and without this, that any other matter or thing in said amended bill contained and not herein and hereby well and sufficiently answered, confessed and avoided, traversed or denied, is true to the knowledge, information, or belief of these defendants, and this they are ready to maintain and prove as this honorable court shall direct.

Wherefore they pray to be hence dismissed with their reasonable cost and charges in this behalf most wrongfully sustained.

C. H. McCORMICK.
L. J. McCORMICK.
R. H. McCORMICK.

GOODWIN, OFFIELD & TOWLE,
Defendants' Solicitors.

UNITED STATES OF AMERICA, *Northern District of Illinois:*

37 Leander J. McCormick, one of the said defendants, being duly sworn, says that he has heard the foregoing answer read and knows the contents thereof, and that the same is true of his own knowledge, except as to the matters which are therein stated on information and belief, and as to *to* those matters he verily believes it to be true.

L. J. McCORMICK.

Subscribed and sworn to this 20th day of August, 1877, before me—
[SEAL.] JOHN H. WHIPPLE,
Notary Public.

Endorsed: Filed Aug. 20, '77. Wm. H. Bradley, clerk.

Afterwards, to wit, on the fifteenth day of October, 1877, came the complainant, by his solicitors, and filed in said clerk's office his replication to the answer and amended answer of Cyrus H. McCormick *et al.* in said entitled cause; which said replication is in the words and figures following, to wit:

38 *Replication.*

UNITED STATES OF AMERICA, *Northern District of Illinois,* } *ss:*

In the Circuit Court of the United States for the Northern District of Illinois. In Chancery.

HUGH GRAHAM *vs.* CYRUS H. MCCORMICK *et al.*

The replication of Hugh Graham, complainant, to the answer and amended answer of Cyrus H. McCormick, Leander J. McCormick, and Robert H. McCormick, defendants.

This repliant, saving and reserving to himself, now and at all times hereafter, all and all manner of benefit and advantage of exception which may be had or taken to the manifold insufficiencies of the said answer and amended answer of the said defendants, for replication thereunto says that he will aver, maintain, and prove his bill of complaint and amended bill of complaint to be
39 true, certain, and sufficient in the law to be answered unto, and that the said answer and amended answer of the said defendants are uncertain, untrue, and insufficient to be replied unto by this repliant, without this—

That any other matter or thing whatsoever in the said answer contained material or effectual in the law to be replied unto and not herein and hereby well and sufficiently replied unto, confessed and avoided, traversed or denied, is true.

All which matters and things this repliant is ready to aver, maintain, and prove as this honorable court shall direct, and humbly prays as in and by his said bill and amended bill — has already prayed.

BANNING & BANNING,
Solicitors for Complainant.

Endorsed: Filed this fifteenth day of October, A. D. 1877. Wm. H. Bradley, clerk.

40 Afterwards, to wit, on the fifteenth day of April, in the adjourned March term of said court, 1878, in the record of the proceedings thereof in said entitled cause, before Hon. Henry W. Blodgett, district judge, is the following entry, to wit:

Order.

HUGH GRAHAM
vs } In Chancery.
CYRUS H. MCCORMICK *et al.*

On motion of S. A. Goodwin, Esq., solicitor, leave is given defendants to amend their answer herein.

Afterwards, to wit, on the twenty-first day of May, in the adjourned May term of said court, 1879, in the record of the proceedings thereof in said entitled cause, before Hon. Henry W. Blodgett, district judge, is the following entry, to wit:

Order.

HUGH GRAHAM
vs. } In Chancery.
CYRUS H. MCCORMICK *et al.*

Now comes John N. Jewett, Esq., and, by leave of court, is substituted as solicitor for defendants herein in place of S. A. Goodwin, Esq., deceased.

41 Afterwards, to wit, on the second day of June, in the adjourned May term of said court, 1879, in the record of the proceedings thereof in said entitled cause, before the Hon. Henry W. Blodgett, district judge, is the following entry, to wit:

Order.

HUGH GRAHAM
vs. } In Chancery.
CYRUS H. MCCORMICK *et al.*

Now come the parties, by their solicitors, and thereupon, on motion, time for defendants to take proofs herein is extended sixty days and for the complainants thirty days' additional time thereafter is extended to take proofs herein.

Afterwards, to wit, on the twenty-seventh day of September, in the July term of said court, 1879, in the record of the proceedings

thereof in said entitled cause, before the Hon. Henry W. Blodgett, district judge, is the following entry, to wit:

Order.

HUGH GRAHAM
vs.
CYRUS H. MCCORMICK *et al.* } In Chancery.

Now come the parties, by their solicitors, and, on motion
42 of defendants' solicitors, leave is given said defendants to file amendment to their answers herein, conditioned that defendants take additional proof by the tenth day of October next; and it is ordered that the proofs on file be applicable in case under said amendment.

On the same day, to wit, on the twenty-seventh day of September, 1879, came the defendants, by their solicitors, and filed in said clerk's office their amended answer in said entitled cause; which said amended answer is in the words and figures following, to wit:

43 *Amended Answer.*

United States Circuit Court, Northern District of Illinois. In Equity.

HUGH GRAHAM

vs.

CYRUS MCCORMICK, LEANDER MCCORMICK, & ROBERT H. MCCORMICK.

And now comes the defendants, and by leave of court amend their answer to complainant's original and amended bill of complaint as follows:

1st. By inserting, immediately before the paragraph which introduces the patent referred to as anticipating the complainant's device in the original answer, the following clauses, viz:

"And these defendants, further answering, deny that said Hugh Graham, the complainant, is the sole owner of said patent No. 74342, or that he has any such right or title in said patent as to enable him to bring this suit, but these defendants aver the fact to be that prior to the alleged assignment of the said Alvaro B. Graham
44 of his interest in said patent to said complainant he, the said Alvaro B. Graham, has assigned his entire interest in said invention and patent to himself and William B. and Cyrus A. Werden by assignment in writing of date Nov. 25th, 1865, and duly recorded in the United States Patent Office, and that the interests of said William B. & Cyrus A. Werden has never, by direct or mesne assignment, or otherwise, been conveyed to said complainant.

"And these defendants, further answering, say that the entire alleged invention shown and claimed in the first and second claim- in said patent No. 74342 was fully shown and described in patent No. 67041, of date July 23rd, 1867, and issued jointly to said Alvaro B. Graham, William B. Werden, and Cyrus A. Werden.

"And these defendants are informed and believe & therefore aver the facts to be that said Alvaro B. Graham's application for the first and second claims in patent No. 74342 and his assignments of said patent to said Hugh Graham were fraudulent efforts to deprive said Werdens of their legal rights to said alleged invention.

45 "And these defendants, further answering, say that said patent No. 74342 is invalid especially as to the first and second claims, as said claims could be legally secured only by a reissue of patent No. 67041."

2nd. By inserting immediately after the citation of anticipating devices the following clause:

"And these defendants, further answering, say that said alleged invention was placed on public sale and in public use, more than two years prior to the application of said Alvaro B. Graham for patent No. 74342, by said Alvaro B. Graham's full knowledge and consent, and that said offering for sale and said sale and public use were known to the following persons at the places named:

"Eli Wilder, of Waukegan, Ill., at Waukegan, Ill.

"Fenner W. Ward, of Waukegan, Ill., at Waukegan, Ill.

"J. Brown Porter, of Waukegan, Ill., at Waukegan, Ill.

"Alvaro B. Graham, of Chicago, Ill., at Waukegan, Ill., and elsewhere.

"Richard W. Dooley, of Benton, Ill., at Benton, Ill.; to

46 Hanson Minskey, of Waukegan, Ill., at *at* Waukegan, Ill.

"To George W. Stearns, of Warren, Ill., at Warren, Ill.; to William R. Baker and William J. Hanna, of Chicago, Illinois, at Chicago, Ill.

"And several other persons whose names and address- are now unknown to defendants, but which these defendants ask permission to insert when the same can be ascertained.

"And these defendants, further answering, say that they have a right to make & sell and use said alleged invention by virtue of license from one of the owners thereof."

C. H. McCORMICK.
L. J. McCORMICK.
R. H. McCORMICK.

UNITED STATES OF AMERICA, } ss:
Northern District of Illinois, }

L. J. McCormick, one of defendants, being duly sworn, says that he has heard the foregoing answer read and knows the contents thereof, and that the same is true of his own knowledge, ex-

47 cept the matters which are therein stated on information & belief, and as to these matters he ver-y believes them to be true.

—— ——.

Subscribed and sworn to before me this 27th day of Sept., 1879.
E. A. DRUMMOND,
U. S. Com'r.

Endorsed: Filed Sept. 27, 1879. Wm. H. Bradley, clerk.

48 Afterwards, to wit, on the third day of November, in the adjourned October term of said court, 1879, in the record of the proceedings thereof in said entitled cause, before Hon. Henry W. Blodgett, district judge, is the following entry, to wit:

Order.

HUGH GRAHAM
vs.
CYRUS H. MCCORMICK *et al.* } In Chancery.

Now come the parties, by their solicitors, and on motion of Mr. Banning, solicitor, time to take additional proofs herein is extended ten days.

49 Afterwards, to wit, on the nineteenth day of April, 1880, came the defendants, by their solicitors, and filed in said clerk's office their petition for a rehearing in said entitled cause; which said petition is in the words and figures following, to wit:

United States Circuit Court for the Northern District of Illinois.
In Equity.

HUGH GRAHAM
vs.
CYRUS H. MCCORMICK, LEANDER J. MCCORMICK, & R. HALL MCCORMICK.

To the honorable the judges of the circuit court of the United States for the northern district of Illinois:

The defendants in the above-entitled cause petition your honors for a rehearing in the same, and to that end ask that the cause may be reopened for taking further testimony, and for reargument and for cause respectfully represent—

I. That since the hearing in this cause was had before your honors the defendants have learned of the following new testimony, which if it had been before your honors must have caused a different decree, & yet which, after the exercise of due diligence, they failed to find before the hearing.

(*a.*) The defendants introduced in their testimony patent No. 51546, of December 19th, 1865, granted to one Frank Bramer.

50 This patent showed clearly all the elements of the first claim sued upon and substantially all the elements of the second certainly more clearly than the same are found in the defendants'

machine. When the complainants introduced their rebuttal testimony they carried Graham's invention back to 1863, which thereby anticipated Bramer & made his patent of no avail to the defendants. The defendants made diligent enquiry and were then unable to fix Bramer's invention before 1863, but since said hearing they have learned and are now able to prove that said Bramer reduced said invention to practice by building a full-sized machine and working the same successfully in the latter part of the summer of 1862. He worked the same machine in 1863, and in 1864 he commenced making them for the market, and has made and sold over 10,000 of them. See the affidavits of Frank Bramer and Albert Bramer, hereto attached & marked "Exhibit 1" and made part of this petition. The use of this same machine in the summer of 1863 and its general construction is shown also by the affidavits of Lewis Bramer and Geo. W. Way, hereto attached and marked "Exhibit 2" & "Exhibit 3." The facts herein shown can be clearly proven by said Frank Bramer, Albert Bramer, Lewis Bramer, George W. Way, and others.

(*b.*) The defendants show, for further cause for reopening this case for taking further testimony and for a rehearing, that since the hearing had the defendants have discovered that in the spring & summer of 1859 one William Moore, then of Mt. Vernon, Ohio, built and sold several harvester machines at Mt. Vernon, O., which
51 were successfully used, that embraced all the elements of the first two claims of the Graham 1868 patent. It had the vibratable link, the swivel joint M, the swivel joint M″ in the same relation to each other as in the Graham patent & performing exactly the same functions, and the lever L the same as Graham's, except that it had a device for limiting the downward thrust of the cutting edge. It has all that Graham has and one improvement in addition, viz., an adjustable stop to limit at will the downward thrust of the cutting teeth, all which the defendants expect to prove by said William Moore, also by Frank Moore, S. Stultz, & O. Welshymer, all of whose affidavits are hereto attached and marked "Exhibit 4."

We beg leave here to offer as a part hereof a model of the machines made by said Moore & referred to in said Moore's affidavit & marked "Model of Moore 1859 Harvester Machine," As this Moore machine was never patented the defendants had no means of knowing of its existence until after the decision made by your honors in this case. The talking about said decision led to its discovery.

II. Your petitioners, the defendants, further petitioning, respectfully represent that it is an error in fact to say that the legal title to the invention claimed in the first two claims of the Graham 1868 patent upon which this suit was brought is solely in the complainant.

The rights secured by a patent is not the ownership of the mere parchment issued by the Patent Office.
52 And an assignment of an interest in an invention is not limited merely to such parchment, but the thing secured by the patent and by an assignment in the ownership of the invention & the exclusive right to make, use, and sell such invention. Alvaro

B. Graham, the inventor, on the 25th of November, 1865, assigned the entire ownership of the invention in question to himself and to W. B. Worden and C. A. Worden, & this assignment was filed & recorded in the Patent Office on the same day the application for the 1867 patent was filed, viz., Dec. 5th, 1865. (See copy of said assignment, hereto attached and marked "Exhibit 5.")

This 1865 application had the full description of this invention and is identified in said assignment. The removal of this invention to the 1868 patent certainly cannot change its ownership. It could only become the sole property of said Graham again by the execution of another assignment in writing and no such assignment was ever made by the Wordens. The fact that the 1868 patent issued to A. B. Graham solely did not in any way affect the title of the Wordens to a two-thirds interest in the invention and the patent therefor. This question is fully discussed and this doctrine clearly established by the Supreme Court in Gaylor *vs.* Wilder, 10 Howard, 493. The Court there hold that the assignment of the invention prior to application for a patent carries the legal title to the patent that may subsequently issue for the invention, notwithstanding the patent may issue solely to the inventor.

53 Such has been the uniform holding in the circuit courts before and after the decision of the Supreme Court. To save the invention from the fatal effects of more than two years' public use your honors were obliged to find that, so far as pertained to the first two claims of the 1868 patent, *that* the application for the 1868 patent was only a continuation of the Dec. 5, 1865, application, and therefore said first two claims must be included in the assignment recorded in the U. S. Patent Office Dec. 5th, 1865.

III. The defendants think they should be awarded a new hearing for the reason that they were misled in believing that your honors would follow the construction of the Graham patent which was given to it in this court in the case of Hugh Graham *v.* Elijah H. Gammon *et al.* (Chicago Legal News, vol. IX, No. 45, p. 370), and therefore did not argue at the hearing the limitations of said patent in the light of said decision. The counsel for the defense are confident that the construction of the complainant's patent given in that case was the only correct one that can be given, & that if applied here must show that the defendants' machine does not infringe said patent; that the defendants' mechanism is incapable of performing the functions of complainant's patented device & therefore cannot infringe it.

We submit as understood by the defendants' counsel that the decision of your honors in this cause gives the Graham patent a much broader construction than given by Judge Blodgett in the

54 case referred to, & thereby caused the defendants' testimony to fall short of what they believed to be a perfect defense.

They supposed that if they proved that they did not infringe the Graham patent as construed and limited by his honor Judge Blodgett their defense would be complete, and were thereby thrown off their search for anticipating devices; yet they did use due diligence, but failed before hearing to find the new matters herein disclosed.

(c.) Your petitioners, the defendants, further show, as cause for reopening this case, for taking further testimony, and for a rehearing, that since the arguing had your petitioners have discovered that one Harvey L. Hopkins, now of Chicago, Illinois, made a full-sized machine involving the elements claimed in the first two claims of the complainant's patent, combined and operated in substantially the same way, and used the same in the summer of 1862 in the State of New York, and also used the same in the summer of 1863 in the said State of New York, and that he has made and sold from that time to the present machines substantially the same.

This your petitioners are prepared to prove by said Harvey L. Hopkins and many other witnesses. (See Exhibit 6, hereto attached.)

The information that this device was made and used by said Hopkins prior to the alleged invention of Alvord B. Graham was not known to your petitioners until since the hearing in said cause.

IV. Your petitioners, the defendants, further represent that
55 at the hearing of this cause the attorneys for the complainant cited as authority for an extremely liberal construction of the statutes relating to two years' public use prior to application for patent and as to what amounted to filing an application for a patent the decision of Judge Shepley in the case of Henry *vs.* The Francistown Soapstone Co., reported in 9 O. G., 408 (or as cited on page 40 of complainant's brief, 3rd Dec., case 312).

This decision, as your honors no doubt discovered, relaxes to a very great degree the stringency of the law upon these decisions as the same had previously been held by the courts. Judge Shepley had no precedent whatever for his loose holding as to what amounted to a filing of the application or as to what amounted to two years' public sale or use prior to filing of application.

In reaching the opinion promulgated by your honors the defendants cannot rid themselves of the impression that this decision of Judge Shepley had a great influence in determining the questions in this suit to which said decision referred.

In the case cited a motion was afterward filed to reopen said case to take further testimony and reargue the same.

That motion was granted, and after the death of Judge Shepley the case was argued before his successor, Judge Lowell, and a decision was rendered January 30th, 1880, and reported in the Official Gazette for March 9th, 1880, page 569.

56 In this decision your honors will discover that Judge Lowell has revised Judge Shepley on both of the points referred to, and holds, just as all courts had held before, that a single sale more than two years prior to the filing of the application for a patent was sufficient to render the patent invalid, and also that the filing of an application for a patent means filing the same in the Patent Office.

And on the matter of public use Judge Lowell further corrects the loose language of Judge Shepley. He says "that sales in the usual *cause* of business, whether absolute or conditional, if they are sales

of the patented things, work a forfeiture. A single sale has this effect as well as a hundred sales."

He also discusses the matter of selling upon warranty, and says in substance that if the transaction showed that the seller regarded the thing sold as practical, or if he held the same for sale as practical machines, that the fact that he warranted them or agreed to take them back if they were not satisfactory does not save them from the effect of the statute.

Your petitioners believe that by a rehearing under this revised decision that your honors would change their holding in the matter in dispute, and therefore pray that the cause may be reopened and reheard.

57 V. The petition of the defendants in the above-entitled cause respectfully represents further that your petitioners find themselves aggrieved by the decision made by your honors in this cause, whereby it was decided that " the defendants' machine has the swivel joint attached to the frame, the vibratable link with the same form as the plaintiff's, and the draft rod attached forward in substantially the same way as the plaintiff's, but instead of having a swivel joint at *m'*, as stated in plaintiff's machine forward of the shoe the draft rod has a swivel joint at the rear end of the shoe, and there is an arm attached to a part of the vibratable link substantially like that of the plaintiffs, and the substantial difference, as it seems, between the plaintiff's device as described in the first and second claims and that of defendants' is that the draft rod is attached to the rear part of the shoe, and not to the forward part, as in the plaintiff's patent. There are also other devices in the defendants' machine which may make it different from the plaintiff's; but as to the swivel joint, the vibratable link, and the mode in which the motion is produced in the finger bar there does not seem to be much difference in substance, and in both machines and by substantially the same means there is produced a rocking motion.

" In this connection it is noticeable that the defendants in the claims set forth in their specifications make a rocking motion
58 of the shoe and cutter a feature of their combination.

" In their second claim they say that they claim the combination of the shoe and drag bar extending over and in rear of the shoe and its swivel joint connecting it with the rear end of the shoe, whereby the drag bar sustains the thrust of the shoe while leaving it free to rock on its hinges.

" Again, in their fifth claim, they say that they claim the combination of the shoe, the forked coupling arm, the drag bar extending over and in rear of the shoe, the swivel pin connecting the two, the rocking lever and detent mounted on the drag bar, and the adjustable link connection between the lever and the coupling arm, whereby the shoe readily may be rocked or adjusted.

"And, again, the motion which seems to be produced in the operation of plaintiff's machine is more distinctly described in the 7th claim made by the defendants in their patent as follows: 'The combination of the shoe, the drag bar, the forked coupling arm, and the other elements of mechanism before mentioned, whereby the shoe

is first rocked and then lifted by one continuous movement of the lever.'"

And your petitioners further represent that the letters patent of your petitioners referred to in the said decision were not introduced in evidence during the taking of testimony in this cause, and were not made the subject of any testimony by any witness, to the
59 effect that the description therein given and the terms therein used described or applied to the same things that are described in the patent of the complainants herein; that these letters patent were offered to the court on the hearing at the commencement of the argument, and that your petitioners' counsel, supposing that the question before the court was whether the machine constructed by the defendants was within the description and claims of the complainant's patent, did not examine the said letters patent with a view to considering either whether it described any different machine from the one actually built by the defendants or whether the terms used in it were capable of being so construed as to describe operations which the machine itself did not perform, and therefore no argument was made to the court upon that patent by your petitioners' counsel.

Your petitioners further show that the words quoted in the decision of the court from the said patent as descriptive of the operation of their said machine do not describe the operation of the complainant's patented machine, but do describe an operation that is exactly the same as that shown in both the Ball and Zug machines and that which was in public use many years before the alleged invention of the complainant. The words "rocking motion" used in the two patents and in the decision became known and, so far as your petitioners know, were first used in the reissues of Cyrenus Wheeler's patent of 1860, but were not used in the original patent of
60 1854, in which the operation described in the reissue as rocking was described by the words, "By the lever attached to the arch the driver can raise or depress the points of the cutters, the arch turning on its bolts as now arranged for the purpose of cutting higher or lower or for the purpose of passing any obstruction met with without leaving his seat."

In this machine, as in the complainant's patented machine, the rocking motion of the finger bar was controlled by a lever in the hands of the driver, so that the cutter bar could be set and held fast at any angle, and the cutter bar was also hinged, so that it could rise or fall at its outer end, as in the complainant's machine. The patents of Ball and Zug do not use the word "rock" to express this movement of the cutter bar, but they do describe the movement substantially in the terms used in the patent of Cyrenus Wheeler, which has been adjudged by the circuit court of the United States for the second circuit to cover all reaping and mowing machines in which the cutter bar has two motions, one of which is now called "rocking" and the other of which is the elevation of the bar from its outer end.

And your petitioners beg leave to refer the court to the Cyrenus Wheeler patent and its reissue for further information.

And your petitioners represent to your honors that the description in their patent quoted in the decision of the court is the
61 description exactly of the operation performed in both the Ball and Zug patents, in which other words are used to express the same fact.

In the Ball patent the following statement is made: "The driver, too, by means of the lever I can, with but little effort, turn up the front of the finger at pleasure without raising either end of the finger beam off the ground, as shown in red, Fig. 6."

The operation thus described is precisely the operation done in your petitioners' machine by the hand lever in that machine—that is, the lever "turns up the front of the finger at pleasure" as far as the organization permits it to rise, which is controlled by the arc of vibration of the vibratable link exactly the same in both cases. When the front of the finger is turned by this lever until it reaches the limit of its capacity to rock or vibrate or turn up, then the continual movement of the lever elevates the entire finger bar off the ground; and this is the operation described in defendants' patent in the words quoted in the decision of the court as follows: "Whereby the shoe is first rocked and then lifted by one continuous movement of the lever."

At the time of the granting of the Ball and Zug patents, in 1859, this operation called "turning up" had not been designated as "rocking" of the finger bar, which term, as your petitioners believe, came into use in consequence of the reissue of the Wheeler patents in 1860; and hence the difference of terms in the different patents to express the same function.

62 And your petitioners show that the rocking of the finger bar in their machine is not controlled by their lever in the same sense in which it is controlled by the lever in the Graham patent.

In the Graham patent the lever is positively connected to the finger bar through the vibratable link so that the finger bar and the lever must always act together, and the angle of one controls and determines the angle of the other in all circumstances. This operation is precisely the same as that in the Cyrenus Wheeler patent, in which the driver's lever was in positive connection with the finger bar and controls its angle of inclination to the horizon, and this operation was called rocking in the reissues of that patent, which were after the date of the Zug and Ball patents.

In your petitioners' machine, however, there is no control over the rocking motion when the machine is in operation in the field. The finger bar is free to adapt itself to the undulations of the ground without control by any part of the machine within the limits allowed to it, and which are necessarily controlled by safety in depressing the finger bar so that the finger bar shall not dig into the ground, and by efficiency in elevating it, because above a certain angle of elevation it would be inoperative as a cutter; but between these limits, whose extent is not exactly certain but varies with the judgment of the constructers, the finger bar is entirely free to rise and fall as it is affected by the surface of the ground. This

63 is precisely the case with the Ball and Zug, but when it is desired to raise the finger bar by a chain and so hold it up independently of the surface of the ground the hand lever is used for that purpose, and so it is in the Ball machine.

In your petitioners' machine this lever performs also the function of raising the bar off the ground when it is urged further than sufficient to elevate the fingers.

This latter function is performed in complainant's machine by another lever, which is not the subject of the complainant's patent or any part of it, and which performs the same office that was performed years before in the other machines by a similar contrivance.

And therefore it is an error, in fact, to say that "there is an arm attached to a part of the vibratable link substantially like that of the plaintiff's," and there is no testimony in the case sufficient to support that finding of fact.

And your petitioners further show that, as matter of fact, there is no rocking motion "produced" in the finger bar in their machine other than that same motion produced in the finger bar of Ball's machine, and which is an essential part of a floating finger bar whereby it can be raised in extraordinary emergency by the lever, while at the same time it is left free in ordinary use to follow the undulations of the ground.

It is true that in complainant's machine the rocking mo-
64 tion is "produced" by the lever, and it has no other rocking motion; but this rocking motion is not the sort of rocking motion which is in the Ball and Zug machines or in your petitioners' machine, in all of which it is controlled by the surface of the ground, but it is exactly the rocking motion of the Cyrenus Wheeler finger bar, as shown in his patent of 1854.

Your petitioners therefore represent to your honors that they are entirely surprised by the decision of the court, inasmuch as no testimony to the effect that your petitioners' patent contained these statements, with the effect now attributed to them, was before the court; and, as your petitioners understood the argument of the complainants, it was not claimed that your petitioners' machine infringed the second claim of their patent, but it was contended that the first claim was independent entirely of the control of the rocking motion by the operator, and that the finger bar was intended to be left free to be controlled by the surface of the ground, and that therefore your petitioners' machine was an infringement; and it was explained to the court by the counsel for the complainant that their machine was perfectly operative without the control of the driver, because the so-called swivel-joint m' was in front of the finger bar instead of behind it, whereby it tended to lift up the finger bar and prevent it from sticking fast in obstacles and upsetting.

65 Your petitioners therefore pray that they may be reheard on these questions of fact thus found by the court, and that, if need be, witnesses may be examined upon the question whether, either in the patent of your petitioners or in their machine, there is any apparatus for controlling the rocking of the finger bar similar

to that in the complainant's patent or differing from that which is in the machine of Ball.

C. H. McCORMICK.

I do hereby certify that, in my opinion, the above petition is well founded in fact, and that the decision of the court is under a misapprehension of the facts, caused by the circumstance that the point decided by the court was not the subject of any testimony, and, as I understood it, was not the subject of any argument on the part of the complainant.

EDW'D N. DICKENSON,
Counsel for Def'ts.

Mr. Dickenson's certificate is only to paragraph IV, as the balance has not been submitted to his inspection.

M. D. LEGGETT,
Of Counsel for Def't-.

66 I do hereby certify that, in my opinion, the above petition sets forth new matter that can be proven as stated; that said new matter after diligent search could not sooner be found, and that, as set forth in the II, III, and IV paragraphs, the court is under a misapprehension of the facts, and that the same should be reargued in order that justice may be done between the parties.

M. D. LEGGETT,
Of Counsel for Defendants.

STATE OF ILLINOIS, } *ss:*
Cook County, }

Cyrus H. McCormick, one of the defendants herein, being duly sworn, deposes and says that, as he is informed and believes, the matters and things stated and set forth in the foregoing petition are true.

C. H. McCORMICK.

Subscribed and sworn to before me this 5th day of April, A. D. 1880.

[SEAL.] JOHN J. A. HASBROOK,
Notary Public.

67 "EXHIBIT 1."

STATE OF NEW YORK, } *ss:*
Herkimer County, }

Frank Bramer, of Little Falls, N. Y., being duly sworn, says that the father of deponent, David Bramer, resided at Fabius, Onondaga county, N. Y., and about the year 1840 built at said Fabius a manufactory of agricultural implements; that about 1860 deponent hired or leased said manufactory of said Bramer and commenced the manufacture of agricultural implements in his own name, continuing the business of his father, with whom he had been engaged; that in the autumn of 1862—August or September, 1862—he con-

Exhibit A

No. 379.
McCormick et al. } p. 69
v.
Whitmer, Adm'r &c.

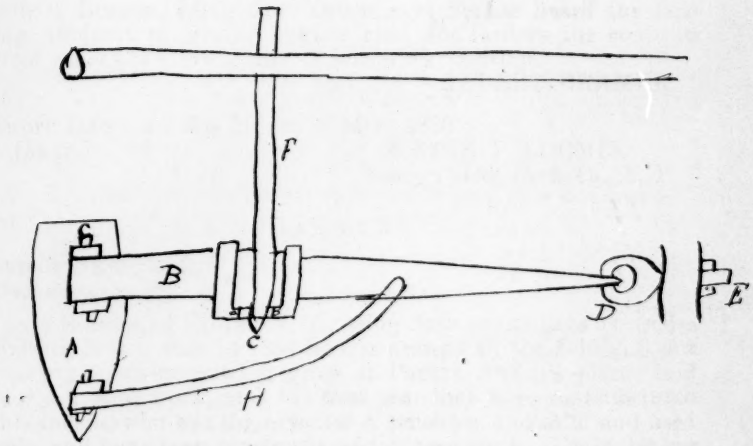

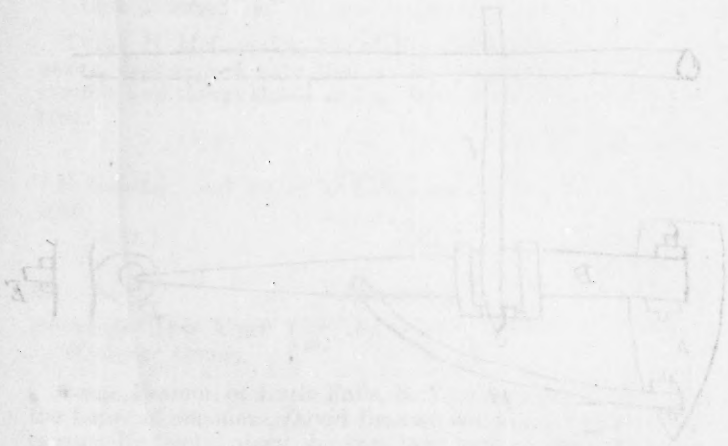

ceived & built a mowing machine with the connection of the finger bar to the main frame by means of a vibratable link and other devices, as shown in Exhibit A, hereto annexed.

This attachment allowed the rocking or rolling of the cutter bar, which was also free to rise or fall at either end.

This machine was put in the field and successfully operated the same fall & the next season. In the year 1864 deponent built forty or fifty of said machines substantially in the same manner, put them in market and sold them, and have continued to do so each year since that time.

The accompany- model represents the present machine & is marked Exhibit B.

68 There have been not less than ten thousand machines built having substantially the same devices and to accomplish in the same way the purposes as in the first machine constructed by me in 1862.

FRANK BRAMER.

Sworn before me this 29th day of Mar., 1880.
[SEAL.] WATTS T. LOOMIS,
Notary Public, Herk. Co., N. Y.

(Here follows diagram marked page 69.)

70 EXHIBIT 1 (*a*).

STATE OF NEW YORK, *Herkimer County:*

Albert Bramer, being duly sworn, says he has heard the foregoing affidavit of Frank Bramer read and knows the contents thereof; that the same is true, of his own knowledge.

ALBERT BRAMER.

Sworn before me this 29 day of Mar., 1880.
[SEAL.] WATTS T. LOOMIS,
Notary Public, Herk. Co., N. Y.

71 "EXHIBIT 2."

STATE OF NEW YORK, } *ss:*
Onondaga County, }

Lewis Bramer, of Fabius, N. Y., being duly sworn, says he resides at Fabius, N. Y.; that in 1863 he was present in the field and saw a mowing machine cutting grass at Parker Anden's place; said mower did good work, and the next year they were manufactured by his cousin, who was the inventor & patentee, and sold and used largely and have been constantly sold & used since. The cutter bar of the said 1863 mower was secured to a link free to vibrate by its attachment to main gearing carriage, and the draft or push rod was secured by a joint to admit of rocking and rolling the cutter bar.

Said invention was patented in the U. S. in 1865.

LEWIS BRAMER.

Sworn to before me the 20th day of March, 1880.
ELMORE WHEATON.

72 "EXHIBIT 3."

STATE OF NEW YORK, } ss:
Onondaga County, }

George Way, of Fabius, N. Y., being duly sworn, says he resides at Fabius, N. Y., and is a mechanic, and assisted in the construction of a mowing machine, in the year 1863, at Bramer's machine shop in Fabius. The cutter bar of the said mower was secured to a shoe which run on the ground, and the shoe was secured by joints to a vibratable link, said vibratable link being attached to the gearing carriage by a free and flexible joint, while the draft or push rod was secured by a joint to admit of the rocking and rolling of the cutter bar. Said cutter bar was free to rise and fall at either end and was under the control of the driver by means of a lever.

This invention was substantially such as was patented by Frank Bramer in 1865, and has been manufactured and used constantly since 1863. During the month of July, 1863, said machine cut successfully in my presence.

GEO. W. WAY.

Sworn to before me the 20th day of March, 1880.
ELMORE WHEEDON,
Justice of the Peace.

73 "EXHIBIT 4."

STATE OF OHIO, } ss:
Richland County, }

William Moore, of Mansfield, Richland county, Ohio, being first duly sworn according to law, deposes and says that during the year 1859, in the spring, he invented and built a mowing machine and operated it successfully in the field cutting grass, and immediately after, during the same year, he built a number of said machines, of which the accompanying model is a true representation. Said machines were sold and used during the harvest of said year by the farmers in Knox county, in said State of Ohio.

Said model above referred to was constructed by me.

WILLIAM MOORE.

Sworn to before me and subscribed in my presence this 1st day of April, A. D. 1880.
[SEAL.]
W. S. BRADFORD,
Notary Public, Richland County, Ohio.

74 EXHIBIT 4 (*a*).

STATE OF OHIO, } ss:
Knox County, }

O. Welshymer and L. Sturts, both of Mount Vernon, Knox county, Ohio, being first duly sworn according to law, depose and say that

they are acquainted with the matters and things and circumstances set forth in the foregoing affidavit of William Moore and know them to be true in substance and in fact.

O. WELSHYMER.
L. STURTS.

Sworn to before me and subscribed in my presence this 1st day of April, A. D. 1880, respectively, by O. Welshymer and L. Sturts.

[SEAL.] FRANK MOORE,
Notary Public for Knox County, Ohio.

75 EXHIBIT 5.

Assignment.

Liber Z 7, page 403.
(Stamp) A. B. G., Nov. 25.

Whereas Alvaro B. Graham, of Waukegan, in the county of Lake and State of Illinois, has invented a new and improved grain and grass harvester for which he is about to make application for letters patent of the United States; and

Whereas Alvaro B. Graham and William D. Werden, of Waukegan, in the county of Lake and State of Illinois, and Cyrus A. Werden, of Pittsfield, in the county of Berkshire, in the State of Massachusetts, have agreed to purchase from Alvaro B. Graham aforesaid all the right, title, and interest which he has or may have in and to the said inventions in consequence of the grant of letters patent therefor, and have paid to him, the said Alvaro B. Graham, of Waukegan, in the county of Lake and State of Illinois, the sum of one dollar, the receipt of which is hereby acknowledged:

Now, this indenture witnesseth: That, for and in consideration of the said sum to him paid, he has assigned and transferred, and does hereby assign and transfer to the said Alvaro B. Graham and William B. Werden, of Waukegan, in the county of Lake and State of Illinois, and Cyrus A. Werden, of Pittsfield, in the county of Berkshire, in the State of Massachusetts, the full and exclusive right to said invention of all the improvements made by him as fully set
76 forth and described in the specification which he has prepared and executed preparatory to the obtaining letters patent therefor:

The same to be held and enjoyed by the said Alvaro B. Graham and William B. Werden, of Waukegan, in the county of Lake and State of Illinois, and Cyrus A. Werden, of Pittsfield, in the county of Berkshire, in the State of Massachusetts, for their own use and behalf and for the use and behalf of their legal representatives to the full end of the term for which letters patent may be granted, as fully and entirely as the same would have been held and enjoyed by him if this assignment and sale had not been made.

In testimony whereof he has hereunto set his hand and affixed his seal this 25th day of November, A. D. 1865.

ALVARO B. GRAHAM.

Sealed and delivered in the presence of—
JOHN E. CLARKSON.
D. N. BARKER.

Received and recorded Dec. 5, 1865.

77 EXHIBIT 6.

STATE OF ILLINOIS, } ss:
County of Cook, }

Harvey L. Hopkins, of the city of Chicago, in said county, being duly sworn, says that he is the Harvey L. Hopkins to whom letters patent of the United States for an improvement in harvesters, No. 33943, dated December 17th, 1861, were granted, which letters patent were reissued July 2d, 1867, & that he also is the person named as the assignee of one R. M. Davisin — letters patent of the United States for an improvement in harvesters, No. 35970, dated July 22d, 1862.

Deponent further says that during the winter and spring of 1862 he manufactured a mowing machine with a finger bar free to rock, turn, or tilt upwards from a plain or level, and the inner shoe which supported the finger bar was so connected with the draw or drag bar as to admit of its turning, rocking, or tilting on an incline or decline; that during the summer of 1862 this deponent and others successfully operated said mower in the field at various times and places and in public competition with other mowing machines, and deponent exhibited said mower at the New York State fair, held at the city of Rochester in the autumn of 1862, & was awarded & received a diploma thereon; that during the summer of 1862 this
78 deponent invented certain improvements in said mower, among which were the following, viz: A swivel joint at the connection of said inner shoe to the main frame of the machine to admit of the rocking, turning, or tilting of said inner shoe & finger bar, & a lever & other mechanical devices for the purpose of enabling the operator in the seat to rock, turn, or tilt the inner shoe on an incline or decline at pleasure & to make it fixed in any desired position or to leave it free to rock, turn, or tilt in passing over the inequalities of the ground; that afterwards and in the fall of 1862 this deponent manufactured one mower with said improvements, & which was operated as last aforesaid in a practical manner, & that in the winter & spring of 1863 deponent manufactured several mowers like the one last above mentioned, which several mowers were operated and used in the field in and during the summer of 1863 by different farmers and persons at public trial.

Deponent further says that since said time, to wit, 1863, he has been almost continuously engaged in inventing, changing, improving, and manufacturing mowers & he now is so engaged, & that he now uses & employs in his mower devices for rocking, turning, or tilting the inner shoe & finger bar in substantially the same manner as made by him in the fall of 1862, hereinbefore described.

79 Deponent further says that in all of his said mowers either end of the finger bar was free to rise & fall independently of the other end.

HARVEY L. HOPKINS.

Subscribed and sworn to before me upon this the 7th day of April, A. D. 1880.

[SEAL.] JOHN J. A. HASBROOK,
Notary Public.

(Endorsed:) Filed Apr. 19, 1880. W. H. Bradley, cl'k.

80 Afterwards, to wit, on the third day of May, 1880, came William Moore, Otho Welshymer, *et al.* and filed in said clerk's office their affidavits in said entitled cause; which said affidavits are in the words and figures following, to wit:

Circuit Court of the United States, Northern District of Illinois. In Equity.

HUGH GRAHAM

vs.

CYRUS H. MCCORMICK, LEANDER J. MCCORMICK, *et al.*

STATE OF OHIO, } *ss:*
Richland County, }

William Moore, of Mansfield, Richland county, Ohio, being first duly sworn according to law, deposes and says that he is the William Moore who, on the 1st day of April, A. D. 1880, before W. S. Bradford, notary public of said Richland county, made and subscribed an affidavit at the instance of defendants in the above-entitled cause.

That the "model" mentioned in said affidavit as having been constructed by himself was placed in the hands of one C. Colahan, of Cleveland, Ohio, in or about the month of September, A.
81 D. 1878; that said C. Colahan was the same Colahan who was also present at the time of the making and subscribing of the said affidavit on April 1, 1880.

That said machines mentioned in said affidavit as having been built and operated by him in the year 1859, of which said model placed in the hands of said C. Colahan in or about the month of September, A. D. 1878, was a true and correct representation, were all the machines and the only machines of that kind that were ever built; that since the said year A. D. 1859 none of said machines have been constructed to the knowledge of this affiant, and affiant thinks if any had been constructed he would have known the fact.

This affiant further says that before and at the time of making the said model above mentioned and delivering the same to the said C. Colahan he informed the said C. Colahan fully in regard to the

time when said machines were made and of the extent and manner of their operation, so far as affiant recollected.

WILLIAM MOORE.

Sworn to before me and subscribed in my presence this 26th day of April, A. D. 1880.

[SEAL.] GEORGE W. STATLER,
Notary Public, Richland County, Ohio.

82 United States Circuit Court, Northern District of Illinois. In Equity.

HUGH GRAHAM

vs.

CYRUS H. MCCORMICK, LEANDER J. MCCORMICK, *et al.*

Otho Welshymer, of the county of Knox and State of Ohio, being first duly sworn according to law, deposes and says that he is in his sixty-ninth year of age, and that he is now and has been for forty years last past a resident of said Knox county and State of Ohio, and that he is the same Welshymer who, on the 1st day of April, A. D. 1880, before Frank Moore, a notary public in and for said Knox county, made and subscribed an affidavit at the instance of the defendants in the above-entitled cause.

That about the year 1859 and at the time referred to by William Moore, of Richland county, Ohio, in his affidavit filed in the above cause by the defendants, he, this affiant, was in the employ of the firm of C. & J. Cooper, then engaged in the manufact*ory* of engines and machinery of various kinds, and in the city of Mt. Vernon, in said Knox county.

That while in said employ of the said C. & J. Cooper and about the said year of 1859 the said C. & J. Cooper manufactured the first mowing machine invented by the said William Moore and referred to by him in his said affidavit.

83 That when said machine was built by said C. & J. Cooper as aforesaid this affiant took said mowing machine a short distance out of said city of Mt. Vernon and into a meadow for the purpose of making a trial of said machine, and did then and there make a trial of the same and ran said machine for about thirty minutes, when the same broke; that said machine was then repaired by said C. & J. Cooper, and affiant again made a trial of it, said machine, and did not run the same more than thirty minutes, when said machine again broke.

That it was again repaired and sold to some person whom affiant does not now remember.

That during said year of 1859 said C. & J. Cooper manufactured, as affiant remembers, nine of said machines, which were all sold to different parties, who took said machines away, but that in a short time all of said machines were brought back to said firm because of their imperfections and breakage, and that said firm never realized

anything for said machines, and that they were taken apart and partly worked up into other machinery and partly sold for old iron.

That the imperfections above mentioned consisted in the breakage of the connection at the rear left-hand corner of the main frame, where the intermediate link between the main frame and the shoe was connected to the main frame, or, in other words, the com-
84 pound joint at the aforesaid rear left-hand corner of the main frame, and also in the knife bar, that the said nine were all that were ever manufactured of the kind invented by the said William Moore.

Affiant says that he continued in the said employ of said C. & J. Cooper in and about their shops from the said year of 1859 until the year of 1867, and that in fact the building of said machines was wholly abandoned by all the parties interested in them.

Affiant further says that some time since, at least one year and a half ago, he had a conversation with the said William Moore in regard to said machines, and that in said conversation the said Moore asked affiant if he remembered anything about those machines, and said that we, meaning himself and affiant, might be called upon to testify concerning said machine, and that afterwards and about one year ago the said William Moore said to affiant that he, said Moore, had made a model of said machine, and, as affiant now remembers, said he had sent said model to some parties.

O. WELSHYMER.

Sworn to before me and subscribed in my presence this 22nd day of April, A. D. 1880.

[SEAL.] C. A. MERRIMAN,
Notary Public, Knox County, Ohio.

85 United States Circuit Court, Northern District of Illinois.

HUGH GRAHAM
vs.
CYRUS H. MCCORMICK, LEANDER J. MCCORMICK, *et al.*

STATE OF OHIO, }
Knox County, } *ss:*

Levi Sturts, of the county of Knox and State of Ohio, being first duly sworn according to law, deposes and says that he is fifty years of age, and that he is now and has been for thirty-five years last past a resident of the city of Mt. Vernon, in said county of Knox and State of Ohio; that during the year of 1859 he was in the employ of the firm of C. & J. Cooper, manufacturers of engines and machinery of various kinds, and in the capacity of foreman of the wood department of said business; that he, said affiant, has continued ever since the said year of 1859 in said employ of said C. & J. Cooper and their successors.

That during said year affiant had charge of the building of the mowing machines mentioned by Otho Welshymer in his affidavit taken in the above cause by the plaintiff.

time when said machines were made and of the extent and manner of their operation, so far as affiant recollected.

WILLIAM MOORE.

Sworn to before me and subscribed in my presence this 26th day of April, A. D. 1880.

[SEAL.] GEORGE W. STATLER,
Notary Public, Richland County, Ohio.

82 United States Circuit Court, Northern District of Illinois. In Equity.

HUGH GRAHAM

vs.

CYRUS H. MCCORMICK, LEANDER J. MCCORMICK, *et al.*

Otho Welshymer, of the county of Knox and State of Ohio, being first duly sworn according to law, deposes and says that he is in his sixty-ninth year of age, and that he is now and has been for forty years last past a resident of said Knox county and State of Ohio, and that he is the same Welshymer who, on the 1st day of April, A. D. 1880, before Frank Moore, a notary public in and for said Knox county, made and subscribed an affidavit at the instance of the defendants in the above-entitled cause.

That about the year 1859 and at the time referred to by William Moore, of Richland county, Ohio, in his affidavit filed in the above cause by the defendants, he, this affiant, was in the employ of the firm of C. & J. Cooper, then engaged in the manufact*ory* of engines and machinery of various kinds, and in the city of Mt. Vernon, in said Knox county.

That while in said employ of the said C. & J. Cooper and about the said year of 1859 the said C. & J. Cooper manufactured the first mowing machine invented by the said William Moore and referred to by him in his said affidavit.

83 That when said machine was built by said C. & J. Cooper as aforesaid this affiant took said mowing machine a short distance out of said city of Mt. Vernon and into a meadow for the purpose of making a trial of said machine, and did then and there make a trial of the same and ran said machine for about thirty minutes, when the same broke; that said machine was then repaired by said C. & J. Cooper, and affiant again made a trial of it, said machine, and did not run the same more than thirty minutes, when said machine again broke.

That it was again repaired and sold to some person whom affiant does not now remember.

That during said year of 1859 said C. & J. Cooper manufactured, as affiant remembers, nine of said machines, which were all sold to different parties, who took said machines away, but that in a short time all of said machines were brought back to said firm because of their imperfections and breakage, and that said firm never realized

anything for said machines, and that they were taken apart and partly worked up into other machinery and partly sold for old iron.

That the imperfections above mentioned consisted in the breakage of the connection at the rear left-hand corner of the main frame, where the intermediate link between the main frame and the shoe was connected to the main frame, or, in other words, the com-
84 pound joint at the aforesaid rear left-hand corner of the main frame, and also in the knife bar, that the said nine were all that were ever manufactured of the kind invented by the said William Moore.

Affiant says that he continued in the said employ of said C. & J. Cooper in and about their shops from the said year of 1859 until the year of 1867, and that in fact the building of said machines was wholly abandoned by all the parties interested in them.

Affiant further says that some time since, at least one year and a half ago, he had a conversation with the said William Moore in regard to said machines, and that in said conversation the said Moore asked affiant if he remembered anything about those machines, and said that we, meaning himself and affiant, might be called upon to testify concerning said machine, and that afterwards and about one year ago the said William Moore said to affiant that he, said Moore, had made a model of said machine, and, as affiant now remembers, said he had sent said model to some parties.

O. WELSHYMER.

Sworn to before me and subscribed in my presence this 22nd day of April, A. D. 1880.

[SEAL.] C. A. MERRIMAN,
Notary Public, Knox County, Ohio.

85 United States Circuit Court, Northern District of Illinois.

HUGH GRAHAM
vs.
CYRUS H. MCCORMICK, LEANDER J. MCCORMICK, *et al.*

STATE OF OHIO, }
Knox County, } *ss:*

Levi Sturts, of the county of Knox and State of Ohio, being first duly sworn according to law, deposes and says that he is fifty years of age, and that he is now and has been for thirty-five years last past a resident of the city of Mt. Vernon, in said county of Knox and State of Ohio; that during the year of 1859 he was in the employ of the firm of C. & J. Cooper, manufacturers of engines and machinery of various kinds, and in the capacity of foreman of the wood department of said business; that he, said affiant, has continued ever since the said year of 1859 in said employ of said C. & J. Cooper and their successors.

That during said year affiant had charge of the building of the mowing machines mentioned by Otho Welshymer in his affidavit taken in the above cause by the plaintiff.

That affiant has personal knowledge of the facts stated by said Welshymer in his said affidavit in regard to the character and failure of said machines, and says they are true; that the
85½ main reasons why said machines were a failure — that they were too complicated, not properly proportioned, and geared too high; they could not stand the motion; the speed was too great; that the enterprise of the building of the said machines was abandoned by all the parties interested in them.

And further affiant saith not.

LEVI STURTS.

Sworn to before me and subscribed in my presence this 22d day of April, A. D. 1880.

[L. S.]

C. A. MERRIMAN,
Notary Public, Knox County, Ohio.

United State Circuit Court, Northern District of Illinois.

HUGH GRAHAM, Pl'ff,

vs.

CYRUS H. MCCORMICK, LEANDER J. MCCORMICK, *et al.*, Def'ts.

STATE OF OHIO, } *ss:*
Knox County, }

John Cooper, of lawful age, being duly sworn, says that during the year 1859 and for a long time subsequent thereto he was a member of the firm of Charles & John Cooper, of the city of Mt.
86 Vernon, Knox county, Ohio; that said firm was engaged in the business of manufacturing steam-engines and other machinery, and that during a part of the year about 1859 said firm manufactured some mowing machines; affiant does not remember the number so manufactured; that said mowing machines were invented by one William Moore.

Affiant does not now remember fully and in detail the history of said machines, but does remember that on account of imperfections of said mowing machines they were only manufactured during one season by the firm of Charles & John Cooper, and were never manufactured by any other party or parties, to affiant's knowledge.

Affiant further says that the machine proved a failure, and that the experiment of manufacturing the same was wholly abandoned by said firm as aforesaid.

JOHN COOPER.

Sworn to before me and subscribed in my presence this 23rd day of April, A. D. 1880.

JOHN D. EWING,
J. P. of Knox Co., Ohio.

THE STATE OF OHIO, } ss:
Knox County, }

I, Samuel J. Brent, clerk of the court of common pleas, being a court of law and of record, within and for the county and State aforesaid, do hereby certify that John D. Ewing, Esq., was at
87 the date of the taking the annexed affidavit a justice of the peace within and for said county, duly authorized to take the same; that I know his handwriting and verily believe that his signature to said certificate is genuine, and that the annexed instrument is executed and acknowledged according to the laws of the State of Ohio.

In testimony whereof witness my hand and seal of said court, at Mt. Vernon, Ohio, this 23d day of April, A. D. 1880.

[L. S.] SAM'L J. BRENT, *Clerk.*

STATE OF ILLINOIS, } ss:
Cook County, }

Circuit Court of the United States, Northern District of Illinois.
In Equity.

HUGH GRAHAM *vs.* CYRUS H. MCCORMICK *et al.*

Charles H. Wood, being duly sworn, on oath says that in the fall of 1877, at the Exposition building in Chicago, he had a conversation with Harvey L. Hopkins, a manufacturer of mowing machines or a dealer therein at Chicago, in which he told said Hopkins that his machine, known as "Hopkin's Choice," was an infringement of the Graham patent.

88 The said Hopkins claimed that his machine was invented before Graham's, and that he could defeat the Graham patent. The suit against McCormicks was spoken about in that conversation.

Afterward and on the 15th day of October, 1877, this affiant met the said Hopkins at the Briggs House by appointment, the object being to talk matters over concerning the Graham patent and the suit against the McCormicks.

Hopkins then claimed that he could give the McCormicks information that would enable them to defeat the Graham patent, and that he would do so unless Graham would give him an interest in whatever might be obtained from the McCormicks in the above-entitled cause, and it was arranged that affiant should write to Mr. Graham, who was then in Kansas, laying the matter before him for the purpose of bringing about such an arrangement as was then talked over.

Affiant states that immediately after such interview at the Briggs House and on the same day he accordingly wrote the said Graham that the contents of such letter written on the said 15th day of October, 1877, truly represented such interview (the party therein referred to being the said Harvey L. Hopkins), and that the portions of said letter which purport to give the statements and propositions

made by the said Hopkins at such interview truly represent and state what the said Hopkins actually suggested and proposed. Affiant afterwards received a postal card in answer, in which Mr. Graham positively and indignantly declined to entertain any such proposition.

89 Affiant further says that after the decision in the above-entitled cause he again saw the said Hopkins on the West Side, in Chicago, and that Hopkins again referred to said cause and spoke of the decision, and, in the course of this conversation, asked affiant if he still considered that his said machine, the "Hopkins Choice," infringed the Graham patent, provided Graham's invention was prior to his own.

Affiant told him that, as he now understood the Graham patent, he did not regard his machine as an infringement, and acknowledged that he was mistaken in his former opinion as expressed in his conversation with the said Hopkins above set out.

Affiant then asked him the same question, and he replied that he did not think it would infringe.

Affiant further states that the said conversation in reference to the Graham patent above last detailed was introduced by the said Hopkins, and that in calling at his place of business affiant had no thought of the Graham case, and did not call at the instance of Mr. Graham or any one representing him.

CHARLES H. WOOD.

Subscribed and sworn to before me this 28th day of April, 1880.
[L. S.] W. F. DUMMER,
Notary Public.

90 STATE OF ILLINOIS, } ss:
Cook County, }

Circuit Court of the United States, Northern District of Illinois.
In Equity.

HUGH GRAHAM *vs.* CYRUS H. MCCORMICK *et al.*

Alvan B. Graham, being duly sworn, upon oath says that in October, 1877, at which time he was living at Girard, Kansas, he received a letter from Charles H. Wood, dated at Chicago, October 15, 1877, in reference to a conversation which he said he had had that morning at the Briggs House with a party whom he afterwards informed affiant was Harvey L. Hopkins.

The burden of said letter, which was sixteen pages long, was that, unless some arrangement were made to prevent it, the said party would furnish evidence to parties interested that would enable them to defeat the patent sued on in the above-entitled cause, and urgent entreaties that this affiant would permit and authorize the said Wood to make an arrangement with the said party by which the latter would be interested in recoveries under said patent, as stated below.

After stating that he had had two conversations with the said party, the one at the Briggs House being by appointment, the said

Wood proceeded to state in said letter in reference to the last conversation as follows:

91 "I met him and we talked matters right straight from the shoulder without any mincing, and were able to understand each other thoroughly at once and got right down to grade, as you say. I think he is square and reliable and believes that he can do just as he says he can. He examined the model, copy of patent, etc., and declares that he can bust our case higher than a kite. The conclusion reached by our talk was this: One of you is morally entitled to compensation for this invention, but perhaps the law would deprive both of you of any reward, and if he can beat you and make a stake by doing so we can't blame him for doing it; either of us would do the same if we stood where he says he does.

"The two intended victims have had the benefit of the invention and ought to pay something for it and can afford to do so."

(The parties here referred to were the defendants in this suit and the parties interested in the Sprague machine.)

"If you and he work against each other who will make anything by it? If we all work together we can make a good thing all around. He proposed that you and I go ahead and push the case, and when the time came he would put in his work and give me half of what he could make by busting the case; and then, said he, If we make a good thing out of it we will give Graham something, if we are a mind to do so. Said he, I ain't no hog, as you will find.

92 This latter proposal was in answer to a remark by me that I wanted you to make something as well as myself.

"Perhaps you will ask why he should propose to divide with me at all. Here is the reason:

"I asked him at the start if he was going to work against us, and said in that case if he could do as he said he could we might as well quit right here, and in that case none of us could make anything out of it; on the other hand, if we all worked together there was a good thing all around. He reckoned that he could take care of himself at first; then we had some side talk and I told him something of your experience and told him that I wanted to see you get something out of it, if I didn't make anything myself. (I'll not ask you to believe all that—*i. e.*, you needn't take it straight.) He replied with the proposition which I have written."

Following this was a long and earnest entreaty that this affiant would authorize the said Wood to make an arrangement with said party to the effect stated above.

This affiant further says that he immediately answered the said Wood, positively and emphatically declining to entertain his proposition or to have any dealings with the party to whom he referred in said letter.

And further affiant saith not.

ALVARO B. GRAHAM.

Subscribed and sworn to before me this 29th day of April, 1880.

J. H. RAYMOND,

Notary Public in and for the County and State Aforesaid.

93 Circuit Court of the United States, Northern District of Illinois. In Equity.

HUGH GRAHAM *vs.* CYRUS H. MCCORMICK *et al.*

SOUTHERN DISTRICT OF NEW YORK, } ss:
State of New York, County of New York, }

Hubert A. Banning, being first duly sworn, on oath says that he is an attorney-at-law, located in the city of New York; that on the tenth (10th) day of April, A. D. 1880, he was in Little Falls, New York, and while there he called upon Frank Bramer, Esq., at his residence, in said Little Falls, and had some conversation with him in relation to the suit of Hugh Graham *vs.* Cyrus H. McCormick *et al.*, recently decided by the judge of the United States circuit court for the northern district of Illinois; that during the course of said conversation the said Bramer stated, in substance, to this affiant that when he, the said Bramer, was in Chicago some little time ago, and previous to the final hearing of said cause, he saw and had some conversation with Charles Colahan, Esq., in regard to the testimony taken in behalf of the defendants in said cause; that said conversation with said Colahan took place after he, the said Bramer, had talked with Messrs. Banning & Banning or one of them in relation to said suit and after he, the said Bramer, had read a part of
94 the testimony taken to be used on the final hearing of said cause.

That the said Bramer informed this affiant, in his conversation with him at the time and place aforesaid, that in his, the said Bramer's, conversation with the said Colahan the said Colahan expressed himself very confident of defeating the patent sued upon in the action above referred to, and that he, the said Colahan, considered it unnecessary to interpose any further defenses in said cause.

Affiant further says that during the course of his conversation with the said Bramer at the time and place aforesaid he, affiant, asked the said Bramer whether at any time previous to the hearing of said cause he made known to the said Colahan or either of the said defendants the matters relating to his supposed prior use of the invention described in said complainant's patent, and that the said Bramer tried to avoid giving an answer to said questions, but stated that he did not just remember what was said; that it might have been referred to in his conversation with the said Colahan, but that he did not remember exactly what was said.

Affiant further says that the said Bramer did, however, state at another time in said conversation that the said Colahan knew, or using said Bramer's own language, "had an inkling," of his supposed prior use of said invention, but that the said Colahan was very confident of being able to defeat said patent upon the defenses already interposed in said cause.

95 And the said Bramer also stated that one Gammon or one Deering, he was not sure which, but thought it was Deering, had some conversation with said Colahan in relation to his, the said

Bramer's, supposed prior use of said invention, and that he was afterwards informed by the said Gammon or Deering that the said Colahan thought it unnecessary to set up said supposed prior use of said invention as a defense to said action.

Affiant further says that during his conversation with the said Bramer he, affiant, remarked to the said Bramer that he supposed the said defendants would, of course, have affidavits relating to his said supposed prior use to use on the application for a rehearing in said cause, and that the said Bramer answered by saying, "Yes; your folks having refused it, they will, of course, have it."

Further affiant saith not.

HUBERT A. BANNING.

Sworn to before me this 12th day of April, 1880.

[L. S.] JOHN A. SHIELDS,
U. S. Com., S. D. of N. Y.

UNITED STATES OF AMERICA, }
Southern District of New York, } *ss:*

I, John I. Davenport, clerk of the circuit court of the United States of America for the southern district of New York, second circuit, do hereby certify that I am well acquainted with the handwriting of John A. Shields, whose name is subscribed to the annexed
96 affidavit, and that the signature to the same is in his proper handwriting; and I do further certify that he was at the time of signing the same a United States commissioner duly appointed by the circuit court of the United States of America for the southern district of New York, second circuit.

In testimony whereof I have hereunto subscribed my name and affixed the seal of the said circuit court this 12th day of April, in the year of our Lord one thousand eight hundred and eighty, and of the Independence of these United States the one hundred and fourth.

[L. S.] JOHN I. DAVENPORT, *Clerk.*

STATE OF ILLINOIS, }
Cook County, } *ss:*

Circuit Court of the United States, Northern District of Illinois. In Equity.

HUGH GRAHAM *vs.* CYRUS H. MCCORMICK *et al.*

Ephraim Banning, one of the solicitors for said complainant, being duly sworn, upon oath says that he is informed and believes that before the hearing in the above-entitled cause the said
97 defendants and their counsel or some of them had direct and personal information of all material matters connected with the invention claimed to have been made by Frank Bramer in 1862, and which they now set up and rely upon in their petition for a rehearing in said cause.

As showing the grounds of his information and belief, this affiant states the facts following:

On or about the 1st day of October, 1879, this affiant's firm, in behalf of said complainant, notified Messrs. Gammon & Deering, of Chicago, that the machine they were manufacturing and selling known as the Warrior mower was an infringement of the first and second claims of patent No. 74342 (which is the patent sued on in the above-entitled cause), and in their letter giving such notice stated that unless the matter could be settled suit would be commenced for the infringement or such other action taken as might be deemed most advisable.

Shortly afterwards both the members of said firm of Gammon & Deering called at the office of this affiant's firm and told them that they were manufacturing said mower under a license from Frank Bramer, of Little Falls, N. Y., and that said Bramer had agreed to protect them against all claims made by others for infringement of patents by reason of their manufacture and sale of said mower. In view of this agreement they desired and requested that the said complainant would look to Bramer for a settlement of said infringement claim. In the course of the conversation then had this
98 affiant told the said Gammon & Deering many facts connected with the proceedings in the above-entitled cause, and informed them generally of its condition and of the expectation of this affiant's firm that it would be *be* heard some time in the coming (now past) fall or winter.

About the time of this interview this affiant's firm received a letter through the mail purporting to come from the said Frank Bramer, a copy of which is hereto attached and made a part of this affidavit, marked "Exhibit Bramer Letter." Afterwards—on the 9th day of January, 1880—the said Frank Bramer (or at least a party introducing himself as Frank Bramer, and stating that he was from Little Falls, N. Y.) called personally upon this affiant, at his office in Chicago, and had a long conversation with him in reference to the claim against Gammon & Deering above mentioned and the further claim which the complainants had and still has against the Warrior Mower Company, of Little Falls, N. Y., with which the said Bramer was connected as manager, for infringements committed by said company by the manufacture and sale of mowers of the same general construction as those manufactured by Gammon & Deering.

In the course of this conversation the said Bramer told this affiant that he had received a letter from Mr. Baldwin, of Washington, attorney for said defendants at that city, stating that Graham had carried the date of his invention back to the winter of 1862–'3,
99 and desiring to know if he could not antedate or anticipate the Graham invention, and asking him to do whatever he could do "quickly."

The said Bramer further stated that unless the complainant abandoned his claims against Gammon & Deering and the Warrior Mowing Company he would furnish evidence to the defendants showing that his own invention was made in 1862 sufficient to in-

validate the complainant's 1868 patent so far as regards the two claims in question, and requested this affiant to give him an immediate answer whether or not the complainant would abandon said claims.

As this affiant's partner was then absent from the city, and as it was not convenient to see Mr. Graham immediately, he not being or calling at the office that day, this affiant declined to give an immediate answer as requested, but promised to write him after consulting with Mr. Graham. This affiant, however, gave him no encouragement to suppose or hope that the complainant would abandon any of his claims above mentioned, and told him that if he desired an immediate answer he might consider that matters would have to take their course, and so might give the defendants information of all matters connected with the making and use of his invention if he desired.

Three days later, after consulting with Mr. Graham, this affiant wrote the said Bramer, stating, among other things, as follows: "Referring to our talk of last Friday concerning the Graham
100 patent, we are instructed to say that our client has concluded to let matters take their course, for if it can be shown fairly and honestly that his patent is invalid he does not want anything from manufacturers on account of it. In view of this decision you will, of course, feel at liberty to take any action that may seem advisable for your own interests or protection."

In the course of the conversation mentioned above as had on the 9th of January this affiant told the said Bramer that said cause was set for hearing for the following Wednesday, and informed him very fully as to the condition of the record, giving him a copy of the same and of complainant's brief.

In the same conversation the said Bramer told this affiant that he had brought affidavits with him relating to the making and use of his invention, which he showed to this affiant, and of which this affiant then made copies, which copies are hereto attached and made a part of this affidavit, marked "Exhibit Bramer Affidavits."

About three days after said conversation, this affiant having previously given several copies of complainant's brief to defendants' resident counsel, Mr. Towle, one of said counsel, asked this affiant if he could give one of said briefs to Mr. Colahan, giving as his reason for the request that Mr. Colahan had seen a copy of such brief in the possession of Mr. Bramer, and was desirous of obtaining one for himself.

101 This affiant further says that he is informed and believes that the said Bramer saw some of the defendants or Mr. Colahan, their representative, when he was in Chicago the week previous to the hearing of said cause, and then showed to them the affidavits in his possession, copies of which are hereto attached, and gave them to the defendants or their representatives, or permitted them to make copies thereof, and that such affidavits or copies were retained by the defendants and shown to Mr. Dickerson at the time he was in Chicago to attend the hearing of said cause.

And further affiant saith not.

EPHRAIM BANNING.

Subscribed and sworn to before me this 20th day of April, A. D. 1880.

[SEAL.] W. F. DUMMER,
Notary Public.

EXHIBIT BRAMER LETTER.

Office of the Warrior Mower Co., Arphaxel Loomis, president; Frank Bramer, managing agent; W. G. Milligan, treasurer; Gerret Drake, financial ag't.

LITTLE FALLS, N. Y., *Oct.* 20, 1879.

Banning & Banning.

GENTS: Gammon & Deering, of Chicago, my licensees, in-
102 form me that you threaten them with suit for infringing the first and second claims of Graham's 1868 patent in building the Warrior mower. Had you threatened this Co. we would have paid no attention to it, but to save G. & D. annoyance I will say to you that the devices covered by the claims above mentioned are shown in my patent of 1865, and further that a machine made by me years before I made application for my patent had precisely the same devices.

Said machine was a full-sized working machine, and was used more or less for six or seven years. At the time of building this machine I was too poor to perfect it or to obtain a patent, consequently was obliged to work on it as I could spare time and money.

If these facts were known to McCormick no doubt they would be an advantage to him in the suit with your client.

It will of course depend upon him, Graham, or his attorneys whether they are made public or not. Having stated the above, you can of course take your pleasure in the matter.

I have advised G. & D. to let you proceed if you so desire.

Yours, etc., FRANK BRAMER.

103 EXHIBIT BRAMER AFFIDAVITS.

STATE OF NEW YORK, } *ss:*
Herkimer County, }

Frank M. Barber and Albert Bramer, being severally duly sworn, says, each for himself, that he resides in Little Falls, N. Y.; that he resided in Fabius, Onondaga C., N. Y., in 1862; that in August or September of that year he saw a mowing machine tried cutting grass; he understood that the machine was invented by Frank Bramer; that the said mowing machine worked well; that the main frame of said mower was rigidly attached to the tongue; that the connection of the finger bar to the main frame was as shown in the drawing hereto annexed. A, the main brace, connected to the main frame at D by a swivel, at the other end to the inner shoe of the finger bar. Push bar B was pivoted to the main brace at E. This arrangement allowed a free motion of the finger bar up and down

and a rolling motion of both; that deponent knows that mowing machines of substantially the same device were made and sold in the year 1864 and afterwards, and that they worked satisfactorily.

A. BRAMER.
FRANK M. BARBER.

Sworn before me this 7th day of Jan'y, 1880.

WATTS T. LOOMIS,
Notary Public, Herk. Co., N. Y.

104 STATE OF NEW YORK, }
Onondaga Co., } *ss:*

George Way, being duly sworn, deposes and says that he is a blacksmith by occupation, and that he resides in Fabius, N. Y.; that in Aug. or Sept., 1862, he worked for Frank Bramer; that in one of these months he done the forging on a mowing machine; that the connecting of the finger bar to main frame was as shown on the other side of this paper and as described by Albert Bramer & F. Barber; that he saw the said mower work and that it worked well, and that in the year 1864 a number of said machines were sold and gave universal satisfaction.

GEO. W. WAY.

Sworn to before me this seventh day of Jan., 1880.
Subscribed and sworn to before me this 7th day of Jan., 1880.

ELMORE WHEATON,
Justice of the Peace.

Lewis Bramer, being sworn, deposes and says that he resides in Fabius, N. Y.; that in the fall of 1862, he saw a mower made by Frank Bramer, then of this town, work in the field; that said mower worked well, and that the finger bar was attached to the main
105 frame as shown and described on the other side of this paper; that in the year 1864 a number of mowers were made and sold *have* the same devices; that said machines were successful, some being now in use to the knowledge of deponent.

LEWIS BRAMER.

Sworn to before me this 7th day of Jan., 1880.

ELMORE WHEATON,
Justice of the Peace.

(Endorsed:) Filed May 3rd, 1880. Wm. H. Bradley, clerk.

106 Afterwards, to wit, on the seventh day of May, in the adjourned May term of said court, 1880, in the record of the proceedings thereof in said entitled cause, before Hon. Thomas Drummond, circuit judge, and Hon. Charles E. Dyer, district judge, is the following entry, to wit:

Order.

HUGH GRAHAM
vs.
CYRUS H. MCCORMICK *et al.* } In Chancery.

Now come the parties, by their solicitors, and now comes on to be heard the motion for a rehearing herein, and, after hearing arguments of counsel, the court, not being now sufficiently advised in the premises, takes the same under advisement.

Afterwards, to wit, on the twenty-second day of April, 1882, there was filed in said clerk's office an opinion of Judge Drummond in said entitled cause; which said opinion is in the words and figures following, to wit:

107 *Opinion. Delivered March* 13, 1880.

Circuit Court of the United States, Northern District of Illinois.
In Equity.

HUGH GRAHAM *vs.* CYRUS H. MCCORMICK *et al.*

This case was argued before the circuit judge and Judge Dyer, of the eastern district of Wisconsin, the parties having requested the latter to sit with the circuit judge in this case, inasmuch as a case involving the same questions under the patent had been heard by him at Milwaukee and was yet undecided. Judge Dyer did not officially sit in this case, but he heard the arguments and participated in the consultation, after which the following opinion was delivered, which, although given by the circuit judge, may be regarded as the joint opinion of both.

Messrs. Banning & Banning, solicitors for complainant; Messrs. E. N. Dickerson, M. D. Legget, and Offield & Towle, solicitors for defendants.

DRUMMOND, *J.:*

This is a bill filed by the plaintiff as assignee of A. B. Graham, to whom a patent was issued on the 11th of February, 1868. The controversy arises only upon the first and second claims of that patent, various objections having been made to the patent
108 and to the right of the plaintiff to maintain suit thereon.

It is objected by the defendants that the Graham patent is invalid because the invention was in public use and on sale for more than two years prior to the application for a patent. The first conception in the mind of the patentee seems to have been in the winter of 1862–'3, and during the year 1863 he made an arrangement with certain parties under which some machines were constructed containing his invention, which, however, proved unsuccessful. Under an arrangement made with another person in

the following year several other machines were constructed, parts of the old machines of 1863 being used in the construction of some of the new ones. Conditional sales were made of some of these machines, and, with a few of them, some grass or grain was cut. They were continually getting out of repair and could not be regarded as a success, and in some instances where money had been paid for the machines it was refunded in whole or in part.

It is insisted on the part of the defendants that these facts constituted a sale and use of the invention for more than two years prior to the application for the patent, while on the part of the plaintiff it is claimed that it was nothing more than testing, by experiment in various ways, whether the invention was successful.

In order to a proper understanding of this part of the case it is necessary to consider the history of the application for the patent.

That was first made on the 25th of February, 1864, by
109 being placed in the hands of solicitors in New York to be by them presented to the Patent Office. The application, however, for some unexplained reason, was not in fact filed there until the 2d of December, 1865. The patentee claims that instructions were given to the solicitors to file the application at once, and he supposed that it was so filed. It contained five claims, the first of which embraced the inventions now in controversy. On the 30th of December, 1865, the first three claims were rejected, an offer being made at the time to allow the other two claims. This offer was not accepted, and on the 24th of March, 1866, an amended claim was filed in place of the rejected claim. It is understood that this referred to the invention now in controversy. On the 4th of April, 1866, this claim was rejected. On the 11th of February, 1867, the first application being still pending, with the action of the Patent Office as stated, a second application was filed, containing, among others, the two claims now in suit. In June, 1867, the claims which embraced the invention now in controversy were withdrawn from the first application, and on the 23rd of July, 1867, a patent was issued on the first application. As issued, that patent did not include the invention now in suit. A patent for the invention in controversy now was issued on the second application on the 11th of February, 1868. A description of the invention now under consideration was contained in the original specifications and drawings which accompanied the first application.

It is claimed by the plaintiff that under this state of facts
110 the application for the patent embracing this invention for the purpose of fixing the time when the two years should begin to run should be considered as having been made on the 25th of February, 1864, when the patentee's first application was put in charge of his solicitors; or, if that be not so, that it should be considered as made when that application was filed in the Patent Office, on the 2nd of December, 1865, so that the two years would embrace the years 1864 and 1865. On the other hand, it is contended by the defendants that the two years began to run on the 11th of February, 1865, because the second application, upon which the present patent was issued, was filed on the 11th of February, 1867, and that the

connection between the first and second application was effectually broken, under the circumstances, so that the two applications could not be considered one continuous proceeding.

The rule is well understood that if an invention has been in public use or on sale with the knowledge and consent of the inventor more than two years before his application for a patent it will render the patent invalid; but it is clear that in order to determine whether the case is within the rule we must consider whether the particular devices which the inventor claims to have invented were perfect, so that they embodied a complete invention. We have some doubts, even upon the theory that the two applications should be considered as parts of one and the same proceeding, whether the patentee's first application can be regarded as made, within the meaning of the law, at the time it was placed in the hands of his solicitors, in
111 February, 1864; but we think, under the circumstances which attended the efforts of the patentee to obtain a patent, together with the connection which the second application seems to have with the first, that for the purpose of fixing the time when the two years began to run the second application should be treated as a continuation of the first, and that both are part of one proceeding.

In this respect this case is not wholly unlike that of Smith *vs.* Goodyear Dental Vulcanite Company, 93 U. S., 500, where the court held that the effort to obtain a new patent in 1864 ought not to be regarded as disconnected from the original application, made in 1855, and that it was but one stage in a continuous effort. It is true in this case, unlike that, a patent was granted on the first application covering the claims which were not rejected, and the patent in suit was granted on the second application; but the subject-matter of the second application was embraced in the first, and the invention now in controversy was described in the specifications and the drawings which constitute part of the first application, and we think it may be said that the continuity of the proceeding which originated in the first application was not broken up to the time when the patent for the invention in suit was granted, in 1868. See, also, Blandy *v.* Griffiths, 3 Fisher, 616.

In view, therefore, of the circumstances under which Graham made his second application and withdrew from the first the claims covering the invention now in suit, we cannot say that the proceeding should be severed so as to make the two years date back
112 from the 11th of February, 1867, and we think that the two years within which the invention could be sold and publicly used without invalidating the patent began to run on the second of December, 1863, which was two years prior to the filing of the first application. It is manifest that the only machine made in 1863, which is distinctly proved to have been sold, was delivered on trial and warranted, and should be regarded rather in the light of a use of the invention for such practical tests as the law permits an inventor to make than as such a public sale or use as is contemplated by the statute. At that stage of the inventor's work his invention was largely in experiment and trial. It could only be tested by practical use in the field, and it was essential that it should be so

tested by farmers on their farms. The inventor was then struggling, as inventors often do, to establish the success of his invention. It was necessary that thorough experimental tests should be made and that he should have the assistance of others in making them, and it is manifest, we think, that the machines of 1863 were not yet so perfected as to be practical machines capable of successful work.

In the light of all the testimony we conclude that what was done by the patentee with reference to the use of the machines in 1863 was intended by him and was in fact for the purpose of experiment and as a test of the machines with a view to their perfection. This part of the defense rests upon a claim of forfeiture of rights secured by the patent. To justify the court in sustaining it the proof
113 should be clear and satisfactory; the right of the infringer to invalidate the patent for this cause should be undoubted, and in view of these considerations we think the patent should be held valid against this objection.

It is insisted further by the defendants that the plaintiff's patent is invalid because the first application for a patent included the invention which is the subject of the two claims in controversy, covered by the patent of 1868, and because that invention was not allowed in a previous patent, but the previous patent was issued for other claims; that the second patent of 1868 is inoperative; and it is said that instead of there being a new patent issued in the case there might have been a reissue of the original patent; and it is also insisted that the second patent was issued for something in addition to what was claimed in the previous patent, which claim was rejected, and the second patent is invalid on that account.

Admitting the facts to be as stated by the defendants, is the conclusion drawn from them correct? We think it is not. It was not a proper case for reissue. There was no defective or insufficient specification. The inventor had not claimed more than he had a right to claim as new. The case as it is put is one where there was the description of an invention which was not claimed, the claims in controversy here having been withdrawn, and where we must assume that the person was entitled to a patent, inasmuch as the office subsequently granted him a patent for the invention described.

On general principals we think that where a person has,
114 within the meaning of the patent law, made an invention which he has described in specifications, including other matters of invention for which last a patent has been issued, that he should not be precluded for that reason alone from applying for and obtaining a patent for that which was not claimed in the first patent.

The object of the patent law was to protect a party who made an invention which was useful, provided he complied with the terms of the law and a patent issued for the invention, and unless there is something in the law which declares a patent issued under such circumstances to be invalid it is the duty of the courts to sustain a patent for an invention thus made. It is to be borne in mind that the application for the second patent, that of 1868, the one in controversy here, was made while that for the previous patent was pending and before the prior patent had been issued.

There were thus pending before the Patent Office two applications at the same time where the claims were different, and we understand it to be in accordance with the practice of the Patent Office to allow applications to be made at the same time, by the same party, for different parts of the same machine.

It is also insisted by the defendants that the plaintiff cannot maintain the suit, because the inventor had not the right to assign to him the whole interest in the invention under the patent of 1868.

On the 25th of November, 1865, A. B. Graham, the inventor, made a contract with W. B. & C. A. Werden that they should have the exclusive right to manufacture and sell the improvement
115 in the machine, and that that right should continue until the patent about to be applied for expired; and Graham agreed that before the letters patent should issue for the invention he would make such necessary assignment that the patent might issue to all the parties jointly, each to have an undivided one-third interest therein. It will be observed that this was not of itself an assignment, but only an agreement to assign.

On the same day that this contract was made what purported to be an assignment was executed by Graham. It stated that whereas Graham himself and the Werdens had agreed to purchase from Graham all the right, title, and interest which he had in the invention, through the grant of the letters patent therefor, therefore he, Graham, assigned to himself and the Werdens the full and exclusive right to said invention of all the improvements made by him, as fully set forth and described in the specification which he had prepared for the purpose of obtaining a patent. The circumstances connected with the application and obtaining the respective patents have been already stated. On the 23d of July, 1867, in pursuance of the contract and assignment already referred to, letters patent were issued to Graham and the Werdens. That patent is not the subject of controversy here. On the 11th of February, 1868, a patent was issued which included the two claims in controversy here to A. B. Graham alone.

It is claimed by the defendants that these facts show that A. B. Graham could not assign to the plaintiff a right to enable him to maintain this suit in his own name on the patent of 1868.
116 The evidence tends to show that a controversy arose between A. B. Graham and the Werdens as to the contracts of November 25, 1865. The former insisted that the Werdens had not complied with their contract, and from that or some other cause there seems to have been no additional assignment made to the Werdens of any interest in the patent of 1868, and, as already stated, that patent was issued to Graham alone. We think that upon this state of facts, there being no controversy about the validity of the assignment by A. B. Graham to the plaintiff of the patent of 1868, that the plaintiff must be considered as having the legal title to that patent, and consequently has the right to maintain this suit in his own name. Whatever equities there may be between the parties to the contract of November, 1865, can be adjusted in a controversy between themselves or their legal representatives. We do not think

that the defendant can claim that the facts stated constitute a defense to this action.

The two claims of the Graham patent, which are alone in controversy here, are the first and second. The first claim is for a combination of the finger beam with the gearing carriage by means of the vibratable link, the draf trod, and the two swivel joints, M and M′, so that the finger beam may both rise and fall at either end and rock backward and forward; and the second claim is the same as the first, with this only added, that an arm is attached to the vibratable link by which the rocking of the finger beam is controlled by the driver. The object of this invention, as set forth in these two claims, seems to be mainly to produce the rocking motion
117 of the finger beam as described and by the method described.

In the Ball patent, while there may be said to be something equivalent to the swivel joint M of the plaintiff's machine where it is attached to the frame, and also something similar to the draft rod and the arm, there is nothing to produce the rocking motion, which is the essential object in the first two claims of the plaintiff's machine, and consequently there is no swivel joint M′, as in the plaintiff's machine, so that there is nothing in the Ball machine to prevent the validity of the combination in the first two claims of the plaintiff's patent.

The Zug machine has, if not a swivel joint like that of the plaintiff's at M where connected with the frame, something which seems substantially similar. It has a vibratable link and it has something which is equivalent to the draft rod, the main difference being that it is attached beneath the shoe instead of above, but there is no joint M′. There is an arm, which is attached to the draft rod and shoe, by which it can be raised and lowered, but Zug claims in his patent that when the machine is in progress over the field and when the finger bar strikes any obstacle there is a device in a box in which the forward part of the draft rod is fastened by which the finger bar yields to the obstacle, and that there is also a mode by which the vibratable rod is attached to the frame called "joint 16" in his patent, and what has been termed an open clevis, where the vibratable link is connected with the draft rod, by which a motion is given to the finger bar, and thus the finger bar is relieved from the obstacle.
118 Zug does not claim that the finger-bar in his machine has a rocking motion, but only that the mode by which the draft rod is fastened and the motion given to the finger bar prevents the obstacle which the machine may meet from doing damage to it.

These seem to be the main differences between the two machines, and the question is, whether there is anything in the Zug machine to prevent the combination named in the first two claims of the plaintiff's patent from being valid.

The defendants' machine has the swivel joint attached to the frame, the vibrating link in the same form as the plaintiff's, and the draft rod attached forward in substantially the same way as the plaintiff's, but, instead of having a swivel joint at M′, as stated in plaintiff's machine, forward of the shoe, the draft rod has a swivel joint at the rear end of the shoe, and there is an arm attached to a

part of the vibratable link substantially like that of the plaintiff's, and the substantial difference, as it seems, between the plaintiff's device as described in the first and second claims and that of defendants' is that the draft rod is attached to the rear part of the shoe and not to the forward part, as in plaintiff's patent. There are also other devices in the defendants' machine which may make it different from the plaintiff's, but as to the swivel joint, the vibratable link, and the mode in which the motion is produced in the finger bar there does not seem to be much difference in substance, and in both machines and by substantially the same means there is produced a rocking motion.

In this connection it is noticeable that the defendants in
119 the claims set forth in their specifications make a rocking motion of the shoe and cutter a feature of their combination. In their second claim they say that they claim the combination of the "shoe and the drag bar extending over in rear of the shoe and its swivel pin connecting it with the rear end of the shoe, whereby the drag bar sustains the thrust of the shoe, whilel eaving it free to rock on its hinges." Again, in their fifth claim they say that they claim the combination "of the shoe, the forked coupling arm, the drag bar extending over and in rear of the shoe, the swivel pin connecting the two, the rocking lever and detent mounted on the drag bar, and the adjustable link connection between the lever and the coupling arm, whereby the shoe readily may be rocked or adjusted;" and, again, the motion which seems to be produced in the operation of plaintiff's machine is more distinctly described in the seventh claim made by the defendants in their patent as follows: The combination "of the shoe, the drag bar, the forked coupling arm," and the other elements of mechanism before mentioned, "whereby the shoe is first rocked and then lifted by one continuous movement of the lever."

It must be confessed that the difference between the Zug machine and the first two claims of plaintiff's patent is not very marked, but in view of the description contained in the specifications of Zug's patent and in those of the plaintiff's patent we are inclined to think that the plaintiff's patent may be sustained on the ground that there is a difference in the manner in which the draft rod is at-
120 tached to the shoe and the finger bar to the shoe and to the vibrating link, and that there is also a difference in the manner in which the combination of the various parts are adjusted, and that there is an effect produced in the plaintiff's machine which does not exist in the Zug machine. In the plaintiff's machine there is a rocking motion and not a mere vibratory motion such as exists in the Zug machine in consequence of the open clevis; neither is there in the plaintiff's machine the yielding of the draft rod, as described in the Zug patent, and it is obvious, too, that from the manner in which the parts are constructed in the Zug machine that there is only a small vibratory action of the finger bar, so that, on the whole, we think that the combination as described in the plaintiff's patent may be sustained.

Then, from what we have said, we do not see that there can be any substantial difference between the combination, as described in the plaintiff's machine, of the swivel joints, draft rod, and vibratable link with the frame and shoe and finger bar, and that of the defendants' machine. The differences which have been stated between the two machines in this respect do not constitute any difference in principle. The one is substantially the same as the other. The additions which have been made to the defendants' machine, such as the device by which the pressure of the cutting apparatus upon the ground is regulated and the other devices which have been made do not affect the combination as claimed in the plaintiff's
121 machine. The attachment of the draft rod to the rear part of the shoe instead of to the front part, which is substantially the only difference that there seems to be in the mode of construction, cannot constitute a difference in principle and cannot prevent the defendants' machine from being an infringement of the plaintiff's patent.

It may be said that there are differences also between the defendants' machine and that of the plaintiff in the manner in which the arm is attached to the vibratable link, and also as to the mode in which the force applied to the arm may operate upon the finger bar, but these are differences of form and not of substance.

Filed April 22, 1882.

WILLIAM H. BRADLEY, *Clerk.*

122 Afterwards, to wit, on the twenty-fourth day of April, in the adjourned March term of said court, 1882, in the record of the proceedings thereof in said entitled cause, before Hon. Thomas Drummond, circuit judge, is the following entry, to wit:

Order.

HUGH GRAHAM
vs.
CYRUS H. MCCORMICK, LEANDER J. MCCORMICK, and ROBERT H. MCCORMICK. } In Chancery.

This cause having been heretofore argued by the counsel of the respective parties, and an opinion having been delivered by the court finding the equities in favor of the plaintiff, and a petition for a rehearing having been heretofore filed by the defendants and argued by the counsel of the respective parties, the court, being sufficiently advised thereon and having overruled the said petition for rehearing, doth now order, adjudge, and decree as follows: That letters patent No. 74,342 issued on the 11th day of February, A. D. 1868, to Alvaro B. Graham for an improvement in harvesters, being the letters patent referred to in the bill of complaint herein, are, in all respects, good and valid in law so far as regards the first
123 and second claims thereof, and that the complainant is the exclusive owner thereof and entitled to sue for and receive

all damages and profits arising out of or accruing from infringements thereof since the 12th day of August, 1870, as alleged in said bill.

That Cyrus H. McCormick, Leander J. McCormick, and Robert H. McCormick, the defendants herein, have infringed upon the said letters patent and upon the exclusive rights of the complainant under the same by manufacturing and selling harvesters embracing and containing the inventions and improvements therein described and mentioned and claimed in the first and second claims thereof, since the said 12th day of August, 1870, as alleged in said bill.

That the complainant recover of said defendants the profits, gains, and advantages which the defendants have received or made or which have arisen or accrued to them from their infringement of the first and second claims of said letters patent committed since the 12th day of August, 1870, as aforesaid, and also the damages which the complainant has sustained thereby.

That this cause be referred to Henry W. Bishop, Esq., one of the masters of this court, to take proofs and to ascertain and take and state and report to the court an account of the number of
124 harvesters the defendants have manufactured and sold embracing and containing said patented inventions and improvements, and of the gains, profits, and advantages which the defendants have received or made or which have arisen or accrued to them from their infringement of the first and second claims of said letters patent committed since the 12th day of August, 1870, as aforesaid, and also of the damages which the complainant has sustained thereby.

That on such accounting the complainant have the right to cause an examination of the defendants *ore tenus* or otherwise, and also the production of the books, vouchers, and documents of the defendants, and that the defendants attend for such purpose before said master from time to time as said master shall direct.

And it is further ordered that the application for an injunction asked for in this case be continued until after the report of the master and until the final decree herein.

125 Afterwards, to wit, on the seventeenth day of June, in the adjourned May term of said court, 1884, in the record of the proceedings thereof in said entitled cause, before Hon. Henry W. Blodgett, district judge, is the following entry, to wit:

Order.

HUGH GRAHAM
vs.
CYRUS H. MCCORMICK *et al.* } In Chancery.

On motion, leave is given said complainant to file a bill of revivor herein against Cyrus H. McCormick, Jr., and Nettie Fowler McCor-

mick, executor and executrix of the last will and testament of the said Cyrus H. McCormick, deceased, and that a subpœna issue herein accordingly.

On the same day, to wit, on the seventeenth day of June, 1884, came the complainant, by his solicitors, and filed in said clerk's office his bill of revivor in said entitled cause; which said bill of revivor is in the words and figures following, to wit:

126 Circuit Court of the United States, Northern District of Illinois. In Equity.

HUGH GRAHAM

vs.

CYRUS H. McCORMICK, LEANDER J. McCORMICK, ROBERT H. McCORMICK.

To the honorable the judges of the circuit court of the United States for the northern district of Illinois:

Hugh Graham, the complainant in the above-entitled cause, brings this his bill of revivor against Cyrus H. McCormick, Jr., and Nettie Fowler McCormick, executor and executrix, respectively, of the last will and testament of Cyrus H. McCormick, deceased, and thereupon your orator complains and says:

1. That on, to wit, the 8th day of June, A. D. 1877, your orator exhibited in this honorable court his bill of complaint against Cyrus H. McCormick, Leander J. McCormick, and Robert H. McCormick, charging them with an infringement of letters patent of the United States No. 74,342, issued to Alvaro B. Graham February 11, 1868, for an improvement in harvesters, and praying an injunction and account of profits and damages against them pursuant to the usual practice in such cases; that process of subpœna being duly issued and served, said defendants on, to wit, the second day of July, A. D. 1877, entered their appearance in cause, and

127 on, to wit, the 26th day of July, A. D. 1877, filed their answer to said bill of complaint; that after the taking of a large amount of evidence on both sides, to wit, on the 14th, 15th, and 16th days of January, A. D. 1880, said cause was brought on to a final hearing before their honors, Judges Drummond and Dyer, and was argued by the counsel for your orator and the said defendants, respectively; that after holding said cause under advisement for some time, to wit, on the 13th day of March, A. D. 1880, said judges in a long and full opinion announced their decision in said cause, finding the equities thereof in your orator's favor; that afterwards, to wit, on the 19th day of April, A. D. 1880, the said defendants filed their petition for a rehearing in said cause, and afterwards, to wit, on the 7th day of May, A. D. 1880, said petition was argued before said two judges by the counsel for your orator and the said defendants, respectively; that afterwards, and after holding said cause under advisement a long time, to wit, on the 25th day of April, A. D.

1882, said court announced a second decision therein, again finding the equities thereof in your orator's favor, and then entered a decree in said cause declaring the first and second claims of said patent No. 74342 to be in all respects good and valid in law and that said defendants had infringed thereon, and ordering a reference to Henry W. Bishop, Esq., one of the masters of said court, to take and report an account of the profits and damages which your orator was entitled to recover therefor; that, a large amount of evidence being taken, said cause was afterwards, to wit, on the 27th and 28th days of February, A. D. 1884, heard before said master on such accounting and argued by counsel for your orator and the said de-
127½ fendants, respectively, and that said master still holds said cause under advisement, not having yet filed his report therein.

2. That after all the proceedings aforesaid, to wit, on the 13th day of May, A. D. 1884, the said defendant, Cyrus H. McCormick, departed this life, testate; that on, to wit, the 19th day of May, A. D. 1884, the said Cyrus H. McCormick, Jr., and Nettie Fowler McCormick were duly appointed executor and executrix, respectively, of the last will and testament of the said Cyrus H. McCormick, deceased, by the probate court of Cook county, Illinois, and that they have accepted such appointment, and, having duly qualified, are now acting as such executor and executrix, respectively.

3. That your orator is entitled to sue for and receive all claims for the infringement of said patent No. 74342, involved in said cause, and to have said cause revived and proceed to a final decree against the estate of the said Cyrus H. McCormick, deceased, as well as against the other of said defendants, and that said cause ought to be revived against said estate and stand in the same position with respect to the said Cyrus H. McCormick, Jr., and Nettie Fowler McCormick, executor and executrix as aforesaid, as it was with respect to the said defendant, Cyrus H. McCormick, at the time of his death as aforesaid.

4. Wherefore, and to the end that justice may be done, your orator prays that said cause may be revived against the said
128 Cyrus H. McCormick, Jr., and Nettie Fowler McCormick, executor and executrix of the last will and testament of the said Cyrus H. McCormick, deceased; that said cause being so revived may proceed to a final decree against the said Cyrus H. McCormick, Jr., and Nettie Fowler McCormick, as such executor and executrix, the same as it would proceed against the said defendant, Cyrus H. McCormick, if he were still living, and that your orator may have such other and further relief in the premises as the nature of the circumstances of his case may require and as to your honors shall seem proper.

And your orator will ever pray, etc.

HUGH GRAHAM,
By A. B. GRAHAM, *Att'y.*

BANNING & BANNING,
Solicitors for Complainant and of Counsel.

STATE OF ILLINOIS, } ss:
Cook County, }

Alvaro B. Graham, agent and attorney-in-fact of Hugh Graham, the above-named complainant, being duly sworn, upon oath says that he has read the foregoing bill of revivor and knows the contents thereof, and that the same is true in substance and in matter of fact.

ALVARO B. GRAHAM.

129 & 130 Subscribed and sworn to before me this 14th day of June, A. D. 1884.

[NOTARY'S SEAL.] DOUGLAS DYRENFORTH,
Notary Public.

Endorsed: Filed June 17, 1884. William H. Bradley, clerk.

131 On the same day, to wit, on the seventeenth day of June, 1884, there issued out of said clerk's office a writ of subpœna in said entitled cause; which said writ, together with the return of the marshal thereto attached, is in the words and figures following, to wit:

UNITED STATES OF AMERICA, } ss:
Northern District of Illinois, }

The United States of America to Cyrus H. McCormick, Jr., and Nettie Fowler McCormick, executor and executrix of the last will and testament of Cyrus H. McCormick, deceased, Greeting:

We command you and every of you that you appear before our judges of our circuit court of the United States of America for the Northern District of Illinois, at Chicago, in said district, on the first Monday in the month of July next, to show cause, if any you have, why the suit of Hugh Graham *vs.* Cyrus H. McCormick, Leander J. McCormick, and Robert H. McCormick should not be revived against the estate of Cyrus H. McCormick, deceased, then and there to receive and abide by such judgment and decree as shall then or thereafter be made, upon pain of judgment being pronounced against you by default.

132 To the marshal*l* of the northern district of Illinois to execute.

Witness the Hon. Morrison R. Waite, Chief Justice of the Supreme Court of the United States of America, at Chicago aforesaid, this 17th day of June, in the year of our Lord one thousand eight hundred and eighty-four, and of our Independence the 108th.

[SEAL.] WM. H. BRADLEY, *Clk.*

Special Deputy's Return.

UNITED STATES OF AMERICA,
Northern District of Illinois, } ss:

Know all men by these presents that I have appointed, and by these presents do appoint, Frank B. Waring my true and lawful deputy to execute the annexed writ—Hugh Graham *vs.* Cyrus H. McCormick *et al.*—and to make return of the execution thereof according to law.

A. M. JONES, [SEAL.]
U. S. Marshal for the Northern District of Illinois.

I have served the annexed writ in the following manner, to wit, upon Cyrus H. McCormick, Jr., executor, &c., June 17th, 1884, by personally delivering to him a true copy thereof on the aforesaid day.

133 I also served the same upon the following-named defendant, not having been able to find her to serve personally, by leaving a true copy for her at her usual place of abode, with an adult person and a member of her family, to wit, upon Nettie Fowler McCormick, ex'trix, &c., on the 17th day of June, A. D. 1884, with C. D. Richmond.

A. M. JONES,
United States Marshal,
By FRANK B. WARING,
Special Deputy.

UNITED STATES OF AMERICA,
Northern District of Illinois, } ss:

Frank B. Waring, being duly sworn, deposes and says that he served the annexed writ as stated in the foregoing return, and that the expense returned by him in addition to the fees was actually incurred, and that the same is according to law.

FRANK B. WARING.

Subscribed and sworn to before me this 18 day of June, A. D. 1884.

[SEAL.] SAMUEL C. HAYES,
Notary Public.

Endorsed: Filed June 27, A. D. 1884. Wm. H. Bradley, cl'k.

134 Afterwards, to wit, on the twenty-first day of July, in the July term of said court, 1884, in the record of the proceedings thereof in said entitled cause, before Hon. Henry W. Blodgett, district judge, is the following entry, to wit:

Order.

HUGH GRAHAM
vs.
CYRUS H. MCCORMICK, LEANDER J. MCCORMICK, and ROBERT H. MCCORMICK. } In Chancery.

The death of the defendant, Cyrus H. McCormick, having been heretofore suggested, and a bill of revivor having been heretofore filed praying that this cause be revived against his estate, and process of subpœna having been issued against Nettie Fowler McCormick, executrix, and *and* Cyrus H. McCormick, Jr., executor, of the last will of the said defendant, Cyrus H. McCormick, deceased, requiring them to appear and show cause, if any they have, why this suit should not be revived against said estate according to the prayer of said bill, and the said Nettie Fowler McCormick and Cyrus H. McCormick, Jr., as executrix and executor, respectively, having failed to show cause why this suit should not be so revived, although duly served with such process of subpœna more
135 than fourteen days before the last rule day of this court—

It is thereupon ordered, and the court doth hereby order, that this cause be revived against the estate of the said defendant, Cyrus H. McCormick, deceased, and that it stand against the said Nettie Fowler McCormick and Cyrus H. McCormick, Jr., as such executrix and executor, respectively, the same as it was against the said defendant, Cyrus H. McCormick, at the time of his death.

On the same day, to wit, on the twenty-first day of July, 1884, came Henry W. Bishop, one of the master's in chancery of said court, and filed in said clerk's office his report in said entitled cause; which said report is in the words and figures following, to wit:

136 *Master's Report.*

In the Circuit Court of the United States for the Northern District of Illinois. In Chancery.

HUGH GRAHAM
vs.
CYRUS H. MCCORMICK, LEANDER J. MCCORMICK, ROBERT H. MCCORMICK.

To the honorable the judges of said court:

I, Henry W. Bishop, master in chancery, to whom the above-entitled cause was referred by an order of the court entered upon the 24th day of April, A. D. 1882, for the purpose of "taking proofs and ascertaining and taking and stating and reporting to the court an account of the number — harvesters the defendants have manufactured and sold embracing and containing said patented inventions and improvements, and of the gains, profits, and advantages which

the defendants have received or made or which have arisen or accrued to them from their infringement of the first and second claims of said letters patent (No. 74342) committed since the 12th day of August, A. D. 1870, and also of the damages which the complainant has sustained thereby," respectively report that upon this hearing I have been attended from time to time, as hereinafter appears, by Banning & Banning, of counsel for complainant, and by Mr.
137 George Harding and Mr. John R. Bennett, counsel for the defendants, when the testimony of William J. Hanna and of other witnesses, whose names appear in connection therewith, was taken, and when other evidence herewith reported was also submitted to me for my examination, together with the record of the cause and the documentary testimony, which has been also referred to upon this examination.

I have also heard the arguments of counsel at length in connection with the testimony submitted to me.

Upon consideration of all of which I find and report—

First. That the defendants have, between the years 1874 and 1879, inclusive, manufactured and sold and should be held to account for twenty-seven thousand and two hundred (27,200) infringing machines combining the two claims of the complainant's patent. For the purpose of showing the number of machines manufactured and sold the defendants were called upon to produce a statement of account from their books, and such statement was produced and exhibited upon this hearing and is shown in the record of this proceeding, from which it appears that the number of machines herewith reported were manufactured and sold by them during said period.

In connection with the production of this account the testimony of William J. Hanna, the general superintendent of the business of the defendants, was taken, and is herewith reported and referred to by defendants' counsel in support of said statement.

Upon the part of the complainant the services of Edward G. Franks were employed as an expert accountant for the purpose of testing, by examination of defendants' books, the accuracy of
138 their statement, and his testimony has been taken and is herewith reported, showing the result of his examination, which makes the number of machines manufactured and sold during the six years mentioned thirty-two thousand three hundred and eighty-two (32,382), a difference of five thousand one hundred and eighty-two (5,182) machines.

There is testimony also in the record, derived from other sources and mainly upon the part of defendants, tending to show that in addition to the twenty-seven thousand and two hundred machines reported sixteen hundred and forty (1,641) other machines were manufactured and sold during this period, but as there is some conflict in all of this testimony, and as the defendants should not be charged with more machines than are definitely shown to have been manufactured and sold by them, and with a view of relieving this question of every possible doubt, I have relied entirely upon the informa-

tion furnished by the defendants themselves and have charged them only to the extent of their admissions.

Second. I find that the testimony established a royalty or license fee of three dollars for each machine manufactured and sold by the defendants containing the peculiar invention of the complainant mentioned and described in the first and second claims of the complainant's patent, though it appears from the evidence that, except in one instance, the sum of five dollars per machine has been charged in the settlements that have been made, but I have adopted the smaller sum as being upon the whole more equitable under all the circumstances.

Independent of these sales, however, there is much testi-
139 mony in the record to show that the value of the Graham inventions was fully equal to the sums realized by the settlement sales of them, and that upon this basis alone the complainant would be entitled to a recovery equal to the sum paid upon such sales.

This seems especially true when it is considered that these sales were made when other patents of similar character were free and open to the use of the public, and the transactions in regard to these were, to a certain extent, voluntary and not influenced by special considerations.

It is insisted that the compromise settlements shown to have been made in several instances furnish a basis upon which damages can be ascertained in this case. In every one of these instances the testimony shows very conclusively that they were made under peculiar circumstances, and do not in my estimation furnish any data that can properly be used upon this enquiry. On the contrary, there is enough developed in each case exhibiting the circumstances and necessities under which compromises were agreed upon to show that the same terms could not be fairly and equitably applied to the case of other parties who have continued in the unauthorized use of the complainant's patents. I do not find that any settlements made before the rights of the complainant were judicially established or before the infringements of the defendants ceased were at a rate less than three dollars a machine.

140 In coming to these conclusions I have not taken into consideration the record of the case of Graham *vs.* The Geneva Lake Crawford Manufacturing Company which was offered upon this hearing. In view of the fact that the courts have repeatedly held that "an established license fee is competent and satisfactory evidence of the value of a patent right because the price which it commands between those who sell and purchase it is the best criterion of its value," and no sales having been shown to have been made in this case for less than three dollars per machine, except as such sales have in a few instances been included in compromise lump settlements, which are fully explained in the testimony, I find no reason for adopting any other conclusion except that furnished by the largest number of sales, and employing as a basis the lowest sum at which they are shown to have been made I have reached the conclusion herein stated.

It is proper to say that upon this hearing no evidence whatever has been introduced upon the part of the defendants tending to show the actual value of this invention, although it has all along been contended that the damages in this case are purely nominal.

In the statement made by the defendants for the purpose of showing the number of machines manufactured and sold by them an item of $57,777.50 is found which was paid to James A. Saxton for royalties upon said machines, and which is claimed should be a credit in favor of the defendants in stating this account.

I do not understand that these payments are of a character entitling them to consideration in this accounting under the decision of the court in this case, and I have for this reason re-
141 jected it.

I have also disregarded entirely the question of compromise settlements, and have adopted the lowest sum fixed upon and paid for licenses under the two claims in controversy, and, although at least in some cases these licenses were at the rate of five dollars for each machine, I have fixed upon the other sum as the more equitable under all the circumstances of the case.

It is contended upon the part of the defendants that the damages sustained in this case are merely nominal, but I cannot find anything in the record which justifies the suggestion.

In all instances but this the rights of the complainants have been at all times recognized in some form whenever they have been asserted or established, and in no case, either before the validity of the patent was declared by the court or since, have settlements been granted at a less sum than is here reported, and no testimony has been taken upon this hearing tending to show that a different rate should be now applied, and upon a very careful review of all the testimony I am unable to find any information tending to a different conclusion.

It is insisted upon the part of the complainant that interest should be allowed from the time of the infringement, or rather from the end of each year in which sales were made, respectively, and cases are cited in support of this position. I do not, however, recognize this case as falling within the reason of the rule, and have therefore disallowed the claim in stating this account. It can hardly be said, I think, that the royalty was fixed when the defendants began to infringe, and the infringement was not wanton in the sense of justifying the allowance; but I find that interest should
142 be allowed at the rate of six (6) per cent. per annum upon the sum herewith reported from the date of the announcement of the decision of the court establishing the rights of the complainant, to wit, the thirteenth (13) day of March, A. D. 1880, from which time compensation for the alleged unauthorized use is shown to have been deliberately withheld from the complainant.

I therefore find and report that there is due the complainant on account of the infringement by the defendants of his rights upon the basis and for the term hereinbefore stated:

For principal the sum of	$81,600
And for interest upon said sum from March 13, 1880, to the date of this report, July 21, 1884, at six (6) per cent.	21,324 80
Making a total sum due said complainant of	$102,924 80

I return herewith all of the testimony, records, and exhibits submitted to me and used by me in the preparation of this report.

All of which is respectfully submitted.

Dated Chicago, July 21, A. D. 1884.

HENRY W. BISHOP,

Master in Chancery of the Circuit Court of the United States for the Northern District of Illinois.

Endorsed: Filed July 21, 1884. William H. Bradley, clerk.

143 Afterwards, to wit, on the nineteenth day of August, 1884, came the complainant, by his solicitors, and filed in said clerk's office his exceptions to the master's report in said entitled cause; which said exceptions are in the words and figures following, to wit:

144 *Exceptions to Master's Report. Filed by Complainant.*

Circuit Court of the United States, Northern District of Illinois. In Equity.

HUGH GRAHAM

vs.

NETTIE FOWLER MCCORMICK and CYRUS H. MCCORMICK, Jr., Executors, &c., of Cyrus H. McCormick, Deceased; Leander J. McCormick, and Robert H. McCormick.

Now comes the complainant, by Messrs. Banning & Banning, his solicitors, and excepts to the master's report filed July 21, 1884, and for ground for such exception says—

First. That the master erred in finding that the defendants should only account for 27,200 machines which infringed the complainant's patent instead of finding, as he should have done, that the defendants should account for 32,382 machines which infringed complainant's patent.

Second. That the master erred in *in* finding that the defendants should account for only 27,200 machines which infringed the
145 complainant's patent, instead of finding, as he should have done, that the defendants should be held to account for 28,841 machines which infringed the complainant's patent, thus including the 1,641 machines mentioned in the master's report, but for which the defendants were not charged by the master.

Third. That the master erred in computing interest only from March 13, 1880, instead of computing it, as he should have done, from the end of each year's infringement upon the sum which the number of machines sold during such year multiplied by three would have produced.

All of which is respectfully submitted.

BANNING & BANNING,
Solicitors for Complainant.

Endorsed: Filed Aug. 19, 1884. Wm. H. Bradley, clerk.

On the same day, to wit, on the nineteenth day of August, 1884, came the defendants, by their solicitors, and filed in said clerk's office their exceptions to the master's report in said entitled cause;
146 which said exceptions are in the words and figures following, to wit:

Exceptions to Master's Report.

United States Circ't Court, Northern District of Ill. In Equity.

HUGH GRAHAM
vs.
CYRUS H. MCCORMICK, LEANDER J. MCCORMICK, and ROBERT H. MCCORMICK.

On exceptions to the master's report.

To the honorable the judges of the circuit court of the United States in and for the northern district of Illinois:

And now comes the defendants in the above-entitled cause, by George Harding and John R. Bennett, their solicitors, and take exceptions to the report of the master filed herein on the 21st day of July, A. D. 1884, viz:

I. For that the said master has found "that the testimony establishes a royalty or license fee of three dollars for each machine manufactured and sold by the defendants containing the peculiar invention of the complainant mentioned and described in the
147 first and second claims of the complainant's patent.

II. For that the said master has refused to allow the defendants a credit of $57,777.50, amount paid James A. Saxton for royalties upon the machines included in this accounting.

3. For that the said master has refused to take into consideration and disregarded entirely the compromise settlements shown to have been made by the complainant in several instances as furnishing a proper basis upon which damages, if any, could be ascertained.

4. For that the said master has refused to find "that the damages sustained in this case are merely nominal."

5. For that the said master has found "that interest should be allowed at the rate of six per cent. per annum upon the sum herewith reported from the date of the announcement of the decision of the court establishing the rights of the complainant," to wit, the thirteenth day of March, A. D. 1880.

6. For that the said master has found and reported that there is due the complainant from the defendants herein the sum of
148 eighty-one thousand six hundred dollars as principal and the sum of twenty-one thousand three hundred and twenty-four dollars and eighty cents as interest thereon, making a total of one hundred and two thousand nine hundred and twenty-four dollars and eighty cents.

Whereas the said master should have found and reported—

1. That the complainant had no established royalty or license fee.

2. That the complainant is entitled to and can recover from the defendants herein nominal damages only.

Wherefore the defendants except to the said master's report and pray the judgment of this honorable court thereon.

Aug. 14, '84.

GEORGE HARDING,
JOHN R. BENNETT,
Sol'rs for Defendants.

(Endorsed:) Filed Aug. 19, 1884. Wm. H. Bradley, clerk.

149 Afterwards, to wit, on the 20th day of January, 1885, came Parkinson and Parkinson and filed in said clerk's office their appearance as counsel for said defendants in said entitled cause:

Appearance.

Circuit Court of the United States, Northern District of Illinois. In Equity.

HUGH GRAHAM
vs.
CYRUS H. MCCORMICK *et al.* } No. 14750.

We hereby enter our appearance as counsel for defendants.
Cincinnati, Ohio, Jan. 19, 1885.

PARKINSON & PARKINSON.

(Endorsed:) Filed Jan'y 20, 1885. Wm. H. Bradley, cl'k.

150 Afterwards, to wit, on the fourteenth day of April, in the adjourned March term of said court, 1885, in the record of the proceedings thereof in said entitled cause, before Hon. Walter Q. Gresham, circuit judge, is the following entry, to wit:

Order.

HUGH GRAHAM
vs.
NETTIE FOWLER MCCORMICK and CYRUS H. MCCORMICK, Jr., as Executrix and Executor of the Estate of Cyrus H. McCormick, Deceased; Leander J. McCormick, and Robert H. McCormick. } In Chancery.

Now come the parties, by their solicitors, and this cause is this day set for hearing upon the exceptions of the defendants to the mas-

ter's report, and the same now comes on to be heard; and, after hearing the arguments of counsel in part, it is ordered that further hearing herein be postponed until to-morrow morning.

Afterwards, to wit, on the fifteenth day of April, in the adjourned March term of said court, 1885, in the record of the proceedings thereof in said entitled cause, before Hon. Walter Q. Gresham, circuit judge, is the following entry, to wit:

151

HUGH GRAHAM *vs.* NETTIE FOWLER MCCORMICK and CYRUS H. MCCORMICK, JR., EX'RS, *et al.*	In Chancery.

Now again come the parties, by their solicitors, and this cause again comes on to be heard in pursuance of the order of postponement entered herein yesterday; and, after hearing the concluding arguments of counsel, the court takes the same under advisement.

152 Afterwards, to wit, on the twenty-seventh day of April, in the adjourned March term of said court, 1885, in the record of the proceedings thereof in said entitled cause, before Hon. Walter Q. Gresham, circuit judge, is the following entry, to wit:

Decree.

HUGH GRAHAM *vs.* CYRUS H. MCCORMICK, Executor, and NETTIE FOWLER McCormick, Executrix, of the Last Will of Cyrus H. McCormick, Deceased; Leander J. McCormick, and Robert H. McCormick.	In Chancery.

This cause came on to be heard and was argued by counsel for said parties, respectively, upon exceptions to the report of Henry W. Bishop, Esq., the master to whom this cause was referred, which report is dated the twenty-first day of July, A. D. 1884, and by which there was found and reported to be due from the defendants to the complainant the sum of eighty-one thousand six hundred dollars ($81,600) principal, and twenty-one thousand three hundred and twenty-four dollars and eighty cents ($21,324.80) interest, for infringement of the first and second claims of letters patent of the
153 United States number 74342 issued to Alvaro B. Graham February eleventh, 1868, for an improvement in harvesters.

It is, thereupon, upon consideration thereof, ordered, adjudged, and decreed, and the court doth hereby order, adjudge, and decree, that all said exceptions filed by either of said parties be, and the same are hereby, overruled, except those filed by the defendants relating to the question of interest, being the fifth and part of the sixth, which are sustained to the extent next hereinafter mentioned, and that said master's report do stand in all respects ratified and confirmed as to the allowance of eighty-one thousand six hundred

dollars ($81.600.00) as principal, the same being three dollars ($3.00) per machine for twenty-seven thousand two hundred (27,200) infringing machines, but that said report be set aside as to the allowance of twenty-one thousand three hundred twenty-four dollars and eighty cents ($21,324.80) as interest on said principal sum from the thirteenth day of March, A. D. 1880.

It is further ordered, adjudged, and decreed, and the court doth hereby order, adjudge, and decree, that the said defendants pay to the said complainant the sum of eighty-five thousand and three hundred and fifty-three dollars and sixty cents ($85,553.60), the same being eighty-one thousand six
154 hundred dollars ($81,600.00) as principal, and three thousand seven hundred fifty-three dollars and sixty cents ($3,753.60) as interest thereon at the rate of six per cent. per annum from the twenty-first day of July, A. D. 1884, the date of said master's report, and also the costs of suit, to be taxed herein at —— dollars and —— cents, and that the complainant have execution for said damages and costs against the said Leander J. McCormick and Robert H. McCormick, and that the said Cyrus H. McCormick and Nettie Fowler McCormick, as executor and executrix, respectively, pay the same out of the assets of the estate of Cyrus H. McCormick, deceased, in their hands and in due course of administration; and thereupon the defendants pray an appeal to the Supreme Court of the United States, which is allowed upon their filing a good and sufficient bond, to be approved by the clerk, in the penal sum of one hundred thousand dollars ($100,000.00) within sixty days from this date.

And thereupon the complainant also prays an appeal to the Supreme Court of the United States, which is allowed upon his filing a good and sufficient bond, to be approved by the clerk, in the penal sum of one thousand dollars ($1,000) within sixty days from this date.

By agreement of the parties the court reserves the question of the master's compensation, the same to be considered and determined upon or after the taxation of costs.

155 Afterwards, to wit, on the twelfth day of June, 1885, there was filed in said clerk's office an appeal bond in said entitled cause; which said appeal bond is in the words and figures following, to wit:

Appeal Bond.

Circuit Court of the United States, Northern District of Illinois.
Equity.

HUGH GRAHAM

vs.

CYRUS H. MCCORMICK, Executor; NETTIE F. MCCORMICK, Executrix; LEANDER J. MCCORMICK, and ROBERT H. MCCORMICK.

Know all men by these presents that we, Cyrus H. McCormick, Jr., L. J. McCormick, and C. A. Spring, Jr., all of Chicago, Cook

county, Illinois, are held and firmly bound unto Hugh Graham, the above-named complainant, in the sum of one hundred thousand dollars, to be paid to the said complainant, his executors, administrators, and assigns; to which payment, well and truly to be made, we bind ourselves and each of us, jointly and severally, and our and each of our heirs, executors, and administrators, firmly by these presents.

Sealed with our seals. Dated this 8th day of June, 1885.

156 Whereas the above-named defendants have prayed and been allowed an appeal to the Supreme Court of the United States to reverse the decree rendered in the above-entitled action by the circuit court of the United States for the northern district of Illinois:

Now, therefore, the condition of this obligation is such that if the above-named defendants shall prosecute said appeal to effect and answer all judgment damages and costs if they shall fail to make good their plea, then this obligation to be void; otherwise to remain in full force and virtue.

CYRUS H. McCORMICK, JR. [SEAL.]
L. J. McCORMICK. [SEAL.]
CHAS. A. SPRING, JR. [SEAL.]

The above security is approved.

W. Q. GRESHAM,
Circuit Judge of the United States, Northern District of Illinois.

Endorsed: Filed June 12th, 1885. Wm. H. Bradley, clerk.

157 UNITED STATES OF AMERICA, *Northern District of Illinois,* } *ss:*

In the Circuit Court thereof. In Equity.

HUGH GRAHAM *vs.* CYRUS H. McCORMICK *et al.* } 14750.

We hereby stipulate that the evidence on the part of the complainant in the above-entitled cause may be taken before L. T. Banning and read at the hearing the same as if taken before a special examiner duly appointed by the court.

Chicago, Dec. 18, 1878.

GOODWIN, OFFEILD & TOWLE,
Sol's for Def't.

UNITED STATES OF AMERICA, *Northern District of Illinois,* } *ss:*

In the Circuit Court thereof. In Equity.

HUGH GRAHAM *vs.* CYRUS H. McCORMICK *et al.*

At Chicago, in said district, on the eighteenth day of December, A. D. 1878, before L. T. Banning, in pursuance of the stipu-

158 lation hereto attached.—present, Messrs. Banning and Banning, counsel for the complainant, and Mr. S. A. Goodwin, of counsel for the defendants—at ten o'clock in the forenoon of said day, the said parties, by their counsel as above, met at the office of Messrs. Banning and Banning, No. 147 Randolph street, Chicago, when the following proceedings were had:

Counsel for the complainant offers in evidence a certified copy of letters patent of the United States No. 74342, dated February 11, 1868, to Alvaro B. Graham for an improvement in harvesters, and the same is marked "Graham Exhibit A."

Counsel for complainant offers in evidence assignment of said patent No. 74342 from Alvaro B. Graham to Hugh Graham, dated August 12, 1870, and recorded in the United States Patent Office September 12, 1870, in Liber H[13], page 329, of transfers of patents, and the same is marked "Graham Exhibit B."

WILLIAM H. LOTZ, a witness produced, sworn, and examined on the part of the complainant, deposes and testifies as follows:

159 Direct examination by E. BANNING, Esq.:

Question. State your name, age, occupation, and place of residence.

Answer. William H. Lotz; forty years; mechanical engineer and solicitor *for* patents; Chicago, Illinois.

Q. What opportunity have you had for becoming familiar with patents and patented inventions?

A. I am educated as a mechanical engineer and have followed that profession since I served my apprenticeship, and have been established as solicitor of patents in the city of Chicago since 1865. I believe myself to understand machinery generally; also patents.

Q. Have you examined the specification and drawings of patents No. 74342, referred to above, and do you understand the same?

A. I have examined said patent and believe I understand it.

Q. State what the invention consists of mentioned and claimed in the first and second claims of said patent and what the object of said invention is.

A. The first and second claims in said patent refer to cer-
160 tain ways of connecting the finger bar to the gearing frame. The object of the invention is to give a greater capacity of movement to the finger bar independent of the gearing carriage. The finger bar is connected to a vibratable link, which link is connected at its end opposite the finger bar to the gearing frame by a universal joint, and the end adjoining the finger bar is by means of a drag bar and a universal joint also connected to the gearing frame so as to allow a tilting or vibrating movement to said finger bar independently of the up-and-down movement of said finger bar; also in certain means to apply or regulate said tilting movement by the driver from the driver's seat while said machine is in motion.

Q. Look at this model now shown you and state whether or not it contains a correct representation of the invention mentioned and claimed in the first and second claims of said patent.

A. I have examined said model and compared it with the
161 drawings and specification of said patent, and I find it contains all the parts mentioned in the first and second claims of said patent in the manner described and shown therein. It is a correct representation of said invention.

Counsel for the complainant offers said model in evidence, and the same is marked "Graham model No. 1."

Counsel for the complainant here requests counsel for the defendants to produce a model of the harvesting machine made and sold by them if he is willing so to do.

Counsel for the defendants responds and here produces model marked "McCormick's mower" as a correct representation of the machine made and sold by them before the commencement of this suit.

Counsel for the complainant offers said model in evidence and the same is marked "Graham model No. 2."

Q. Look at this model marked "Graham model No. 2" and state whether or not you find in it the combination or invention
162 mentioned and claimed in the first and second claims of said patent No. 74342, giving your reasons for any opinion you may express.

A. After examining said model carefully I find the same to contain every part described in the first claim, while, as to the second claim, an equivalent is used for one of the parts, namely, the arm *l*. I find said model to contain the connecting vibratable link between the gearing carriage and the finger bar. I find the swivel joints, marked in the specification M and M′, and the draught rod all substantially the same as described in the specification; also a connection between said vibratable link and a lever in reach from the driver's seat, so as to enable the driver to raise or lower the cutting side of the finger beam while the machine is in motion and without leaving his seat.

Q. Do you consider that the connection of the draught bar to the shoe at its rear end is the same in principle, as shown in this model marked "Graham model No. 2," as the connection of
163 the draught rod to the front end of said shoe, as shown in the drawings of the patent referred to and in the model marked "Graham model No. 1?"

A. I think it the same in principle in both models. Said draught rod is to hold the finger bar in a rectangular position with the line of the draught. In both models said rod is so jointed between the gearing frame and the shoe as not to impede the free up-and-down movements of the finger bar and neither the tilting movement of the same. All the difference there is between the two is that in complainant's model said rod connects with the fore part of the shoe, while in the defendants' model the connection is made at the rear end of said shoe.

Q. Then *as* I to understand you that the connection of the draught bar to the shoe in this model, "Graham model No. 2," is by a swivel joint corresponding to the swivel joint M′ in the Graham patent?

A. It is.

164 Q. Does this arm or lever reaching forward from its connection to the draught bar near or above the rear end of the shoe, as shown, perform the office of the arm *l* and its connections of the Graham patent or not?

A. It does in both machines. Said lever or arm is to enable the driver to change or control the cutting sickle so as to bring its cutting edge above or below the cutting line of the machine.

Q. Do you find or not any rocking or tilting motion of the finger bar in this model, "Graham model No 2," corresponding to such rocking or tilting motion in the Graham machine as shown by this model, "Graham model No. 1," or as provided for in the Graham patent?

A. There is a tilting motion in said model No. 2 almost the same as in model No. 1. The only difference I find is that the center of movement is thrown farther back from the face of the finger bar.

Q. Then, in short, do you consider or not that the principle of the two machines as represented by these models is the same

165 so far as regards the combination mentioned in the first and second claims of said patent?

A. I do.

Q. Are the specifications and drawings of this patent, No. 74342, sufficiently clear and intelligible to enable any person skilled in the art to which the invention belongs to understand them and to make and practice the patented invention?

A. They are.

Cross-examination by S. A. GOODWIN, Esq.:

Question. How long have you lived in Chicago?

Answer. Since 1865.

X Q. Did you come here from Germany?

A. I returned from a visit to Germany here. I have been in this country since 1858.

X Q. Are you a naturalized citizen of the United States, and when were you naturalized?

A. I do not remember the exact year; I think it was about twelve years ago since I was naturalized.

X Q. How long have you been in practice as a mechanical

166 engineer and been familiar with machinery and patents as a professional study?

A. I went into mechanical engineering in my sixteenth year and have practiced as such ever since. I have been acquainted with patents and have practiced as a patent solicitor since 1865. I have procured several patents on my own inventions since 1867.

X Q. Does not the rocking or tilting motion in the Graham rocking lever positively control and move the finger or cutter bar up and down?

A. If a stiff connecting rod without play in the joints would be employed to control the finger bar said bar would then be entirely dependent for its tilting movement upon the control of the driver, but if said connection is made flexible or permitted a certain amount

of loose motion, then the driver could throw up the points of the finger of the finger bar; without said finger bar its down tipping movement would depend on the driver's control.

Counsel for the defendants objects to the foregoing answer
167 as not responsive to the question.

X Q. Now, if I ask you whether the Graham machine as constructed and shown in the patent and in the model "Graham No. 1," with its lever and locking device and connection with the arm *l* and that with the vibrating link connecting with the frame and the cutter bar by the swivel joints M and M', does not in its action in the machine when in operation positively control and move the cutter bar up and down?

A. It does not.

WM. H. LOTZ.

UNITED STATES OF AMERICA, } ss:
Northern District of Illinois, }

I, L. T. Banning, special examiner by agreement, residing in Chicago, in said State and district, do hereby certify that the foregoing deposition of William H. Lotz was taken by and before me, persuant to the stipulation hereto attached, on the eighteenth day of December, A. D. 1878, at the office of Messrs. Banning and
168 Banning, in Chicago; that the said witness was duly sworn to testify the truth, the whole truth, and nothing but the truth in said cause, and that his deposition was by me reduced to writing by question- and answers and read over to him and subscribed by him in my presence and in the presence of the counsel for the respective parties, as appears noted on the foregoing pages. I further certify that the parties complainant and defendant were represented at the taking of said deposition, the complainant by Ephraim Banning and Thomas A. Banning, Esqr., and the defendants by S. P. Goodwin, Esq.

In witness whereof I have hereunto set my hand this eighteenth day of December, A. D. 1878.

L. T. BANNING,
Special Examiner.

Examiner's fees paid by complainant's solicitors.

L. T. B., *Ex'r.*

169 UNITED STATES OF AMERICA, } ss:
Northern District of Illinois, }

In the Circuit Court thereof. In Equity.

HUGH GRAHAM
vs.
CYRUS H. MCCORMICK, LEANDER J. MCCORMICK, and ROBERT H. MCCORMICK. } No. 14750.

At Chicago, in said district, on the 9th day of September, 1879, before me, Frederick C. Hale, a notary public in and for Cook

county, Illinois—present, Messrs. Banning & Banning, counsel for the complainant, and C. K. Offield, Esq., of counsel for the defendants—at two o'clock in the afternoon of said day, said parties, by their counsel as above, met at the office of Messrs. Banning & Banning, 147 Randolph St., Chicago, when the following proceedings were had:

WILLIAM H. LOTZ, a witness recalled, sworn, and examined on the part of the complainant, deposes and testifies as follows:

Direct examination by EPHRAM BANNING, Esq.:

Q. 1. You have already been examined once as a witness in this case, have you not?

170 A. Yes; I have.

Q. 2. Have you examined these patents and models offered in evidence by the defendants in this case, which I have shown you, and do you understand them, respectively?

A. I have.

Q. 3. Please take up these patents and, considering them in the order in which they have been offered, state whether or not any of them contains the invention or combinations described in the patent sued on in this case and secured by its first and second claims, or either of them, giving your reasons for any opinion you may express.

A. The first patent offered in evidence by the defendants is that to Jonathan Haines, Sept. 4, 1855, and marked "Defendants' Exhibit Haines Patent No. 13523." In this patent the devices described don't compare with those described in the Graham patent, showing a different combination of parts; it hasn't got the mechanism described in the Graham patent. The next patent is that granted to George C. Dolph, dated Sept. 8, 1857, and being marked

171 "Defendants' Exhibit Dolph Patent No. 18141." In this patent no swivel joints M and M′ has been described nor shown; the tipping of the sickle bar is very limited.

I have not seen the Altman patent No. 20180, and reissued No. 766. As far as I could see from the sketch and claim in the original patent in the Patent Office Reports no swivel joints M and M′ are therein, and only vertical movement; no tilting movement is represented, and no arm *l* for control-ing the tilting movement of the finger bar.

The next is Stelson — Maynard's patent, issued May 17th, 1859, and marked Defendants' Exhibit Stelson & Maynard Patent No. 24063. In this patent the sickle bar is riveted to the end of the shaft, which shaft is journaled in boxes rigidly secured to the rear of the main frame. No draught bar, no vibratable link, and no swivel joints M and M′ are described or shown. The sickle bar, for its rising and falling, is dependant upon the frame.

172 The next patent, of David Zug, dated October 4, 1859, is described as "Defendants' Exhibit Zug Patent No. 25697." No swivel joints M and M′ are shown or described in said patent. The joints or hinges connecting the vibrating link to the frame and to

a draught bar are represented as simply loose enough to allow the folding of the finger beam upon the frame, and no intention for a rocking movement of the finger bar is shown.

The next patent is that granted to E. Ball, dated October 18th, 1859, and marked "Defendants' Exhibit Ball Patent No. 25797." In this patent no swivel joint M′ is shown. A limited upward tilting movement is represented, arranged with an adjusting screw for adjustably holding the finger bar at a desired angle, and is entirely different from the device shown in the Graham patent, not having the free forward and backward rocking motion of the finger bar of complainant's device.

The next patent is that granted to Stephen S. Bartlett and Thomas H. Dodge, dated February 25th, 1862, and marked
173 as "Defendants' Exhibit Bartlett & Dodge Patent No. 34545."

In this patent the finger beam is rigidly connected to a long shoe which reaches to the front end of the machine. It provides for but very limited rocking movement of the finger bar, controlled at the front end by a lever pivoted upon an extension of the axle. It has not the swivel joint M′, and its rocking movement is in nowise analagous to that described in the Graham patent, the shoe depending entirely for adjustment on the action of the driver. The points of the guards can only be raised above the horizontal line and cannot be dropped below.

The next patent is that granted to John A. Dodge on May 23, 1865, marked "Defendants' Exhibit John A. Dodge Patent No. 47807." This patent describes a machine similar to that described in the Ball patent. It has a long shoe to which the finger bar is pivoted and which acts as a draught bar. It has no swivel joint connection and no device is shown for locking the finger bar
174 from the driver's seat or in any other way, nor does it provide for tilting downward of the finger bar.

The next patent is that granted to Ray & Grant, dated November 14th, 1865, and marked "Defendants' Exhibit "Ray & Grant Patent No. 50956." In the machine described in this patent no up-and-down movement of the finger bar independent of the frame has been shown; no vibratable link and no swivel joints M and M′. The machine described provides for locking movement under control of the driver, but no free up-and-down movement of the finger bar as in the Graham machine.

The next patent is that granted to Frank Bramer December 19th, 1865, and marked "Defendants' Exhibit Frank Bramer Patent No. 51546." In this machine the vibratable link is connected to a push bar by a loosely-fitted hinge and the device is connected therewith, consisting of a slot and a set screw for holding the finger bar to any desired angle. The arrangement as shown can be intended
175 for but a very little rocking movement and more for adjusting it and holding it to any desired angle. It has no arm *l* for controlling the rocking motion.

The next patent is that granted to L. J. McCormick and Lambert Erpelding, dated January 15th, 1867, and marked "Defendants' Exhibit McCormick & Erpelding Patent No. 61228." This machine is

represented as having the same movement to the finger bar as the Graham machine in a somewhat different construction.

The next patent is that granted to Andrew Wemple January 29th, 1867, marked "Defendants' Exhibit Andrew Wemple Patent No. 61644." In this machine the rocking movement of the finger bar, also the rising and falling movement of the same, is shown and described, but it is brought about by a different construction and combination of parts. No draft rod, no vibratable link, and only one swivel joint M is shown.

The last patent is that granted to Alvaro B. Graham, Wil-
176 liam B. Weiden, and Cyrus A. Merden, assigners of Alvaro B. Graham, July 23rd, 1867, marked "Defendants' Exhibit A. B. Graham Patent No. 67041." In the drawing of this patent I find the very elements named in the first — second claims of the patent sued on, but in the specification to that patent I find no mention made of the swivel joint M'.

None of the patents brought into evidence by the defendants, except the McCormick & Epelding patent and the A. B. Graham patent of 1867, contain the invention as described in the first and second claims of the patent in suit, as neither of them have the same combination of parts nor the same capacity of movement.

Q. 4. In your opinion, does the specification of the patent in suit require the arm or lever for controlling the rocking motions of the finger bar to be rigid in its connection or not?

A. In the specification the arm *l*, above referred to, is not described as being rigid nor does it describe the necessity that it should be rigid, although an arm rigidly connected to the vibratable
177 link has been shown in the drawings belonging to the specification.

Q. 5. In your opinion, is it necessary that the arm or lever for controlling the rocking motion of the finger bar should be rigid, or will any arm or lever accomplishing that purpose fall within the terms of the patent so as to be substantially the same as Graham's arm *l*, all the other elements of the combination being found?

A. I think any arm so connected with the vibratable link, if brought into connection with the elements named in the first claim of the Graham patent and operating substantially in the manner described, will be an infringement upon the Graham patent if used by any other machine.

Q. 6. What do you mean by the words "so connected" in your last answer? Do you mean connected so as to enable the driver to control the rocking motions of the finger bar or connected the same as in the Graham patent or this model marked "Graham model No 1?"

178 (Objected to by def'ts' counsel as leading and containing a suggested answer to the witness and as not calling for an explanation from the witness, but for a suggested answer by the counsel.)

A. Connected so as to enable the driver to control the rocking motion of the finger bar, substantially the same as described in the Graham patent.

Q. 7. Do you consider the arm or lever for controlling the rocking motions of the finger bar in this model marked "Graham model No. 2" to be the same, or substantially the same, as the arm and connection shown in the Graham patent?

A. I consider it the full equivalent and substantially the same as in the Graham patent.

Q. 8. Does the specification of the patent in suit describe or refer to a swivel joint as connecting the forward end of the draught rod to the main frame?

A. It does not.

Q. 9. Have you examined the full-sized mower marked "Graham mower 1863," and do you understand its mechanism and operation?

179 A. Yes, sir; I have examined the said mower and I do understand its mechanism and operation.

Q. 10. In that mower do the guards of the finger bar drop below the level or horizontal line of their own weight, or is it necessary for action on the part of the driver through the arm or lever connection to force them below such line?

A. The cutting edge of the finger bar will drop below the horizontal line by its own weight, so much so that it requires considerable power by means of the lever near the driver's seat to raise said cutting edge above the horizontal line and to hold it in that position, which has demonstrated itself on the machine by the breaking off of several teeth of the latchet for holding the lever in the desired position.

Q. 11. Does the specification of the patent in suit require that the finger bar shall have an axial or any other particular kind of a rocking motion?

(Objected to by def'ts' counsel as incompetent, the specifications and drawings themselves showing the rocking movement designed.)

180 A. As far as I remember, I think not.

Adjourned, by agreement, to 10 o'clock, Sept. 10th, at same place.

September 10th, 1879, at 10 o'clock a. m., said parties met pursuant to adjournment.

Present: As before.

Q. 12. Have you examined the specifications of the patent in suit since adjournment last evening with special reference to my last question above; if so, with what result?

A. I have examined the specifications carefully and do not find therein any mention of a particular kind of a rocking or rolling motion. I do not find the expression "axial" therein nor anything requiring an axial motion.

Q. 13. Do you consider the rocking motion of the finger bar in the McCormick machine, as represented by this model marked "Graham model No. 2," the same or substantially the same as the rocking motion of the finger bar in the Graham machine?

A. I do. In the McCormick machine the joints connecting
181 the vibratable link with the frame and the draught rod are placed diagonally at opposite sides of the center line of the sickle bar, whereby the axis of rocking is on a line equally between these joints that run transversely to the line of draught, and thereby it will be central to the line of the sickle bar.

Q. 14. What kind of a rocking motion is given to the finger bar in a machine constructed according to the description of the McCormick & Erpelding patent of January 15, 1867?

A. The rocking motion described in said patent is the same or substantially the same as the one described in the Graham patent.

Q. 15. What is meant by the words rocking "forward and backward" in the specification and claims of the patent in suit?

A. Rocking forward means tipping the fingers downward below the horizontal line and rocking backward means turning the points of the finger bar above the horizontal line.

Q. 16. Do you understand the invention secured by patent
182 No. 67041, issued to Graham July 23, 1867?

A. Yes, sir.

Q. 17. Is there or is there not any connection or co-operation between that invention when used on a harvester and the invention secured by the claims now in question further than that they both relate to and are used on harvesters?

(Objected to by Mr. Offield as incompetent and immaterial.)

A. There is no connection. The parts claimed might be attached to a harvester of a different construction, as described in the Graham patent in suit. They are shown in this Graham patent, No. 67041, in connection with a harvester similarly arranged to the one described in the patent in suit, which perhaps the inventor preferred, having the improvements afterwards patented in view.

Q. 18. In your opinion, as a patent solicitor as well as a mechanical expert, are or are not these two inventions, that secured by the patent No. 67041 and that secured by the claims now in controversy, properly subjects for separate patents?

183 (Objected to by Mr. Offield as incompetent and irrelevant.)

A. I think subjects of inventions for different patents. As I have stated before, the improvements patented by patent No. 67041 might be attached or made useful in harvesters of different construction from the one described in the patent in suit.

Q. 19. If this patent No. 67041 were to be surrendered could it be reissued in divisions, so as to cover these two inventions by separate reissue patents, such reissues not being prevented by the state of the art or acts of the inventor?

(Objected to by Mr. Offield as wholly incompetent, it being entirely without the province of this witness to make any statements in reply to that question, it being wholly a matter for decision at the Patent Office when there duly presented.)

A. So far as my knowledge and experience in patent soliciting tells me, the patent can only be reissued if a claim or claims to which an inventor is entitled are omitted by accident, mistake, or
184 inadvertence. In the case that the subject-matter and the claims contained in the patent relate to mechanical devices which can be utilized independent of each other the inventor is entitled to reissues in divisions.

Cross-examination by Mr. OFFIELD:

X Q. 1. In how many patent case- have you ever acted as an expert?

A. So far as I remember, this is the fourth.

X Q. 2. How many patents have you solicited since 1865?

A. About eight hundred or over in Chicago.

X Q. 3. Do you find any rocking motion to the finger beam in Defendants' Exhibit "Haines' Patent No. 13523?"

A. Yes, sir.

X Q. 4. How is that motion produced?

A. It is produced by having a rigid extention to the finger bar across the rear of the machine and by connecting said extension and the finger bar to the front of the machine frame by rods and hook connections, and by a further connection of a transverse brace
185 bar connecting the joint between the finger bar and extension plate with the frame.

X Q. 5. Is there any means by which the finger bar can be rocked backward and forward by the driver, or any means by which the driver can control the motion of the finger bar?

A. There is not. The lever in reach of the driver is simply attached for raising the finger bar above ground.

X Q. 6. And by releasing the lever the finger bar will drop back again to its original place?

A. So it will by its gravity.

X Q. 7. And all the control which the driver has is to raise the finger bar for the purpose of passing it over inequalities or obstructions?

A. So it appears.

X Q. 8. Do I understand you to state that the cutter bar shown in this patent cannot be dropped below a horizontal?

A. I did not state that. That bar may follow the undulations of the ground longitudinally, but it has not the capacity of rising and falling at either end like the Graham.

186 X Q. 9. Has it the rising & falling movement of the Graham, so far as the rising and falling of the points of the guards are concerned?

A. I think it has.

X Q. 10. Do you mean to say that there is any forward and back rocking motion, as shown in the Graham patent in this exhibit, or has it simply a rising and falling movement of the points of the guards?

A. There may be either as far as the connections of the finger bar to the frame are concerned.

X Q. 11. You just explain to the court how any forward or back rocking motion can be produced such as is shown by the Graham patent by the mechanism of this Haines exhibit.

A. The connection being loose jointed the finger bar is, of course, at liberty to follow the undulations of the ground and adapt itself to the inclinations over which it is dragged.

X Q. 12. Is there any mechanism shown in that patent by which a rocking motion can be produced by the driver?

A. If the chain connecting the lever with the finger bar
187 for the purpose of lifting the finger bar clear from the ground was connected with the shoe projecting from the cutting edge while the heel of such shoe was extending rearward of the finger bar, then the lever, as shown in said drawing, the driver might lift the point of the finger bar above the horizontal line.

X Q. 13. Yes; I understand all that, but could the forward and back rocking motion shown in the Graham patent be produced by any volition of the driver through the mechanisn shown in the Haines patent?

A. I think not.

X Q. 14. If the connection between the lever and the sickle bar were a rigid arm instead of a chain connection could the rocking motion described and shown in the Graham patent be produced at the volition of the driver in the Haines patent?

A. Yes; by changing the position of the lever for the driver to operate with and by connecting said lever with a vertical arm rigidly secured upon the sickle bar by a horizontal bar.

188 X Q. 15. Could not a certain degree of rocking motion be produced in the Haines exhibit by simply substituting a rigid arm for this chain connection somewhat shorter perhaps than the chain?

A. If such an arm was in any other but a vertical direction extended from the finger bar and connected to the chain a certain amount of rocking motion could be controlled by the driver, but in such case, the lever holding the chain being pivoted to the frame of the machine direct, the motions of the finger bar for rising and falling transversely would be interfered with, the finger bar being suspended in such case more or less to the frame.

X Q. 16. Is there any rocking motion of the finger beam produced in Graham model No. 1 by the use of the small lever with its chain connection to the vibratable link?

A. I think not, the object of the lever referred to being used only for raising the finger bar at its inward end.

189 X Q. 17. But the points of the guards can be made to rise and fall by the use of that lever, can they not?

A. They can; but the object of the invention being to have the finger bar rise and fall independent of the frame such connection would be an impediment to the movement of the finger bar.

X Q. 18. You consider, do you not, that the mere rising and falling of the points of the guards of the cutter bar by means of the chain-and-lever connection shown in several of the introduced patents is a very different movement from the forward and back con-

trolled rocking motion of the finger beam described in the Graham patent?

A. In such machines in which the chain connection for the rocking forward and backward of the finger bar from the driver's seat is carried out from a lever rigidly pivoted to the frame of the machine I consider such as operating different from the Graham, particularly when the chain connection is made direct with the
190 finger bar and with no arm or lever attached thereto, but where the connection of the chain is made with a lever pivoted to a frame or bar which rises and falls with the finger bar such will be more like the Graham.

X Q. 19. Can you substitute a loose chain connection for the rigid arm shown in the Graham model No. 1 in any manner so as to produce the rocking motion at the volition of the driver now shown in that model? And, if you can, just state to the court how you will do it.

A. It could be done by pivoting the operating lever for rocking the finger bar on the draught rod and by brackets attached thereto for connecting sheaf and rack. For such purpose the draught bar might have to be made heavier than would otherwise be necessary.

X Q. 20. In the McCormick mower, Graham model No. 2, is there any forward and back rocking motion produced to the cutter bar by operating the large wooden lever secured by chain connection to the inner side of the vibratable link?

191 A. To some extent; yes.

X Q. 22. Is the same motion produced to the cutter bar by the use of that wooden lever by its chain connection as is produced by the forward and back rocking motion through the rigid arm in Graham model No. 1?

A. It is not; the operation on the finger bar by said lever in the McCormick mower will interfere with the free up-and-down motion of the finger bar while the machine is in operation. It would make the motion of the finger bar dependent on the rising and falling of the frame.

X Q. 22½. Is there any different motion produced on the cutter bar by the use of the wooden lever-and-chain connection to the inner side of the vibratable link of the McCormick mower than by the use of the small metal lever with the slipping rod connection to the inner side of the vibratable link; I mean, of course, aside from the capacity of the large lever to lift the entire cutting ap-aratus off from the ground?

192 A. Both motions produced by the two levers named on the sickle bar may be similar if the machine is not in operation, but when in operation, I have stated before, the long wooden lever would not answer for the purpose of the small side lever, or if the machine was operating on perfectly level ground the result of the motion of the two levers would be the same.

X Q. 23. Will you explain to the court what difference it would make whether the ground was perfectly level or not as to the operation of the cutter bar by means of the wooden lever of the McCormick mower, where the connection between the lever and the inner side of the vibratable link is a loose chain?

A. The horses pulling the machine going over uneven ground, and the wheels following over the same ground, the line of pull would change continuously from a horizontal line to an incline in either direction, whereby the oscillation to the frame of the
193 machine would raise and lower the finger bar, or the inward end of the finger bar, continuously above and to the ground.

X Q. 24. Do you mean to say that a machine built in accordance with the McCormick Mower Exhibit in actual operation would have the finger bar raised and lowered on its inner end continuously above and to the ground on account of any mechanism shown in this wooden lever and its chain connection to the vibratable link? Isn't that cutter bar free to ride upon all conditions of ground unembarrassed by this lever-and-chain connection, except when operated upon by the driver?

A. It is free in its operations to ride upon uneven ground and to follow the ups and downs, but not so if the wooden lever referred to, with its chain connection, would be employed for the purpose of raising the points of the finger bar to or above the horizontal line.

X Q. 25. Do you deny that a skillful driver cannot watch the
194 uneven-ess of the ground or the billowy or rolling condition of the ground, and operate the points of the guards on the cutter bar in rising and falling in conformity with the surface irregularities? I do not ask you which of the two lever mechanisms is the most convenient and preferable to do this with, but I ask you if a skilled driver cannot do this almost as well by the action of one lever as by the other.

A. By operating the tilting movement of the finger bar from the long lever pivoted to the frame of the machine the driver in doing so would not only have to watch the irregularities of the ground over which the finger bar would be moving, but also all irregularities over which both wheels of the machine would have to go, which I consider an impossibility for the best driver in the world.

X Q. 26. But if a driver was so skillful as to perform your stated impossibility the action or motion produced by the two levers
195 of the McCormick mower on the cutter bar in passing over irregularities of surface would be the same, would it not?

A. Yes; it might, if such was possible.

X Q. 27. Will you answer this hypothecated case by yes or no?

A. I say yes.

(Adjourned to September 11 at 10 a. m.)

SEPTEMBER 11—10 o'clock a. m.

The parties met pursuant to adjournment.

Present: As before.

X Q. 28. Do you consider it necessary in order to bring a machine within the scope of the Graham devices that the joints represented in his patent as M and M′ should be swivel joints?

A. Yes.

X Q. 29. What is the necessity of having them swivel joints?

A. To give free movement in different directions, as in a vertical or horizontal line.

X Q. 30. This can be done by several other different kinds of joints or connections other than the swivel joints M and M',
196 can it not?

A. To a certain extent, yes, but not so complete without allowing a certain amount of lateral free motion, which is not wanted in a well-operating machine.

X Q. 31. Do you not find in Defendants' Exhibit "Dolph Patent No. 18141" that the points of the guards can be raised and lowered substantially the same as in the McCormick mower, only that the Dolph mechanism prevents the dropping of the guards below the horizontal?

A. The joints of the guards can be raised in the Dolph machine only to a very limited extent, only sufficient to enable the finger bar to be folded upon the frame.

X Q. 32. Do you find any lever or connection in the Dolph exhibit by means of which the sickle bar can be raised & lowered so as to avoid the irregularities of the field surface?

A. Yes, sir; there is lever and a rack, said lever being connected to the end of a bar which is rigidly secured at its other end
197 to finger bar, which will enable only a very limited upward tilting of the guard points.

X Q. 33. But the rising and falling movement of the sickle bar, through the instrumentality of the lever and its connection, is the same in kind as in the McCormick mower, "Graham model No. 2," but differ- in scope and degree of movement, is it not?

A. It is neither in kind nor in scope and degree of movement the same as the McCormick machine.

X Q. 34. Just explain the difference in the rising and falling movement of the guard points of the cutter bar in the Dolph exhibit, so far as there is any movement at all in that exhibit, from the rising and falling movement of the sickle bar in the McCormick mower, "Graham model No. 2."

A. In the Dolph machine the rising and falling of the guard points is not independent of the rocking of the frame of the machine, while in the McCormick machine such movement is independent of the movement of the frame of the machine.

198 X Q. 35. Yes; but supposing the two machines were standing still and the lever was actuated in both the Dolph & McCormick mower for raising and lowering the guards, would there be any difference in the rising and falling movement thus caused, except in degree, between the two machines?

A. There may be a similarity, the movement of the finger bar in the Dolph machine being but very limited as far as the looseness in the joints connecting the rear of the vibratable link with the frame of the machine will allow such movement while the machine is not in motion.

X Q. 36. I desire you to answer the question yes or no, and I now ask you if the rising and falling movement in the points of the

guards of the Dolph machine is not the same as in the McCormick mower, so far as it goes, both machines being at rest?

A. Yes.

X Q. 37. In the McCormick mower the shoe carrying the finger beam is hinged to the rear end of the draught rod, is it not?

A. Yes, sir.

199 X Q. 38. Whatever movement is given to the points of the guards by raising and lowering them for the purpose of following the inequalities of the ground in the McCormick mower is caused by raising and lowering them from this hinged point of the draught rod at the heel of the shoe, is it not?

A. Not exactly. The draught rod being pivoted to the front end of the machine, it only takes a pulling strain of the finger bar to that point; the draught bar will raise and lower to follow the inclination which the shoe may take in going over uneven ground.

X Q. 39. Yes; we all know that, but when the lever is actuated in the McCormick mower connected with the inner side of the vibratable link by the slipping rod the points of the guards rise and fall from the hinged point & connection on the rear of the shoe to the draught rod, do they not?

A. That lever referred to simply changes the angle between the shoe and the draught rod, and if the points are raised in
200 that manner above the horizontal line, then, of course, the finger bar will be supported from the heel of the shoe.

X Q. 40. Could not the same rising and falling movement of the guard be produced by connecting the lower end of this loose slipping rod with the upper face of the shoe in front of the cutter bar without any connection with the vibratable link?

A. Yes; in that case such a connection would interfere, perhaps, with the rising and falling of either end of the finger bar.

X Q. 41. Would not a loose chain connection in the McCormick mower answer the same purpose as the loose slipping rod, so far as raising and lowering the points of the guards are concerned by means of the lever?

A. Yes; any loose-jointed connection between the vibratable link and the lever pivoted against the draught rod would answer if the connections were otherwise, such as shown in the McCormick machine.

201 X Q. 42. Will you please look at Defendants' Exhibit Stelson & Maynard Patent No. 24063, and state what you find to be the purpose of the rigid connection of the lever N^2 to the rods hinged to the cutter bar?

A. I find said arm, N^2, to be for the purpose of controlling the tilting of the finger bar by the driver.

X Q. 43. This finger bar can be rocked backwards & forwards by this lever in the Stelson & Maynard exhibit with as much ease and facility as in the Graham patent, can it not?

A. Yes, sir; but not independent of the frame.

X Q. 44. The device for rocking this finger bar backward and forward in the Stelson & Maynard exhibit is much more simple

than in the Graham machine, is it not, or at least equally as simple?

A. Yes; because the finger-bar connection is made more direct with the frame.

X Q. 45. This frame is hinged by a loose collar upon the axle connecting the drive wheels, and the rear of the frame with
202 this lever attachment and sickle-bar connection rides upon the ground, does it not?

A. Yes.

X Q. 46. If this rear end of the hinged frame rides upon the ground and acts in reality as a shoe, what object & what advantage would there be in having the lever connection for rocking the sickle bar backward and forward independent of the frame?

A. The advantage of having the sickle bar independent of the frame in its movements, by connecting it to the frame with the vibratable link, is not only for the rocking forward and backward of the sickle bar, but also for its free rising and falling at either end, which allows more freedom to the movements than there is where the machine frame has to follow the undulations of the ground.

X Q. 47. Is there not a free rising and falling movement of the sickle bar at either end in this Stelson & Maynard exhibit?

A. Not as free on its inward end, which would be raised by any obstacle coming into contact with any point of the rear
203 end of the frame.

X Q. 48. As I understand you, you do not find in the Defendants' Exhibit Zug Patent No. 25097 any rising and falling movement of the guard points and cutter bar by means of a lever-and-chain connection either in the patent exhibit or certified duplicate Patent Office model before you?

A. There is shown and described in specification of Zug patent a slight lifting movement to the guard points to take place in advance of lifting the finger bar above gro-nd and for folding it upon the frame, but no intention appears from the description for utilizing such tilting movement for raising and lowering the guard fingers above or to the horizontal line while the machine is in operation.

X Q. 49. Does the rising and falling movement of the guard points and sickle bar shown in Defendants' Exhibit Ball Patent No. 25797 and Defendants' Exhibit "Model Ball Machine" differ in any respect from the rising & falling movement of the sickle bar
204 in the McCormick mower, except that in the Ball model & patent exhibit the points of the guards cannot be dropped down so far as in the McCormick mower?

A. There is considerable difference. In this Ball model the finger bar or shoe which is rigidly connected to that finger bar is hinged with its heel end upon a long drag bar in such a manner that even if the finger bar was raised on its cutting edge it would still ride upon said drag bar and could not, therefore, follow short undulations of the ground. The object in that machine as described in the specification of the raising of the cutting edge is such as to be permanently adjusted by a bolt and screw nut.

X Q. 50. It is also provided, is it not, that this screw nut can be loosened for the purpose of allowing the finger bar to rise and fall the same as if no such device was there?

A. That screw nut is only to be loosened for readjustment.

205 No provision is made in said machine to raise and lower the cutting edge of the finger bar while the machine is in operation. Even if that screw nut was left out the finger bar riding with its shoe upon the drag bar would be prevented from following the undulations of the ground to any great extent. The rising and falling of the finger bar in this machine would be entirely dependent upon the rising and falling of the drag bar.

X Q. 51. You find in this specification this language used, do you not, in connection with this screw nut and the plate on which the sickle bar is riveted: "The screw nut *s* need only be loosened sufficiently to play freely up and down in the piece F when it is desired to permit the plate G to turn on its hinge?"

A. Yes; but that is only the end of a sentence in that specification. It first reads: "To obviate the necessity, however, of taking out the screw nut *s* every time the change is made, the piece F is provided with a slot so that the screw nut," &c.

206 X Q. 52. And you don't find anything, do you, either in the drawings, specifications, or model of this Ball patent which provides for the rising and falling of the guards of the finger bar to escape or conform to the irregularities of the ground? Please examine that patent carefully and see if you don't change your mind from the testimony already given, paying particular reference to the tenth written page of this patent exhibit.

A. Yes; after carefully going over the specifications again I see mention made that the cutting edge of the sickle bar may be raised or lowered to a limited extent by the lever, which is also used for raising the sickle bar entirely off from the ground, but that lever attachment being rigid with the frame the rising and falling of the frame would make it difficult for the driver to adjust the sickle bar to different angles, except he wants to raise it as high as a stop in the piece F, and will limit such motion.

207 X Q. 53. So far as the rising and falling movement of the sickle bar is concerned in this Ball model & patent exhibit, does it differ in any respect from the rising and falling movement of the guard points and sickle bar in the McCormick mower, except that the points of the guards cannot be dropped down as far in the Ball?

A. As I believe, I said before, it is not the same movement and differs in a great many respects.

X Q. 54. Please explain to the court it what respect it differs, having reference simply in this answer to the rising and falling of movement and not to the mechanism producing that movement.

A. The finger bar being pivoted upon a drag bar at the rear end of its shoe, it thereby swings from a fixed center in relation to the drag bar, while in the McCormick machine the drag bar is placed above the shoe and hinged to the rear end of the shoe, which will

allow that shoe to adjust itself to the ups and downs of the ground independent of its connection with the draught bar.

208 X Q. 55. Supposing the two machines, the McCormick & the Ball machine, are standing still and the lever for actuating the guard points and cutter bar is operated, is there then any difference at all in the rising and falling movements of the guard points and cutter bars in the two machines, except that one drops lower than the other?

A. They lift in the same way, both from the heel, which rests upon the ground in the McCormick machine and upon the drag bar in the Ball machine, and their movements are then very much alike.

X Q. 56. What is the difference in their then movements, if any? Point out to the court what it is.

A. In the Ball machine the center of oscillation is fixed, while in the McCormick as high as the cutting edge of the finger bar is raised above the horizontal line so far to the rear the bearing point supporting the finger bar is moved. In the Ball machine the finger bar has a swinging movement, while in the McCormick a rocking movement.

209 Adjourned to September 12, 1879, at 10 o'clock a. m.

SEPTEMBER 12, 1879—ten o'clock.

Said parties met as before, pursuant to adjournment.

X Q. 57. Do you mean to say that the bearing of the shoe or plate upon which the sickle bar fastened in the Ball machine is fixed and does not rest on the ground the same as in the McCormick mower?

A. It does not rest the same on the ground as in the McCormick mower; its hinged portion where it connects with the rear end of the drag bar touches the ground only.

X Q. 58. And as the finger bar is raised does not the entire bearing point of the shoe or plate upon which the sickle bar is pivoted in the Ball machine, marked "Defendants' Exhibit Model Ball Machine," rest upon the ground?

A. As by the model represented the plate rigidly connected to the finger bar with its heel end would have its bearing point upon the ground only in extreme cases, as going down a steep hill, but not while going up hill.

210 X Q. 59. You do not find the rocking motion of the Graham machine at all, then, in this Ball Model Exhibit?

A. I do not.

X Q. 60. But still you find, do you not, that the motions shown in this Ball Model Exhibit and in the McCormick mower are very similar while the machines are at rest or going down hill—as to the movements of the guard points and cutter bar—when actuated by the lever?

A. While at rest they may be similar, but not while going down hill.

X Q. 61. Why do you designate the motion of the sickle bar in the Ball machine produced by the lever a swing motion?

A. Because it has to rise from a fixed pivot of the drag bar.

X Q. 62. Well, do you mean because the pivot is a fixed one for that reason the motion is a swing one?

A. I mean so because the pivot for that shoe is fixed to the end of a bar called a drag bar, which supports the finger bar.

X Q. 63. In the McCormick mower the rear end of the shoe
211 carrying the cutter bar is pivoted to the rear end of the drag bar, is it not?

A. The bar referred to is not exactly a drag bar, but a draught bar, which takes the pulling strain in mowing, but has not to support the shoe of the finger bar as regards the McCormick mower.

X Q. 64. Do I understand you that you do not find this swing motion that you have described in the Ball Model Exhibit in the McCormick mower; if so, why not?

A. I find them to be quite different. In the Ball mower the finger bar, resting upon the drag bar and pivoted thereto, will have to follow entirely the rising and falling of the drag bar, while in the McCormick machine we find just the reverse. In that machine the draught bar, in its up-and-down motion, has to follow the shoe which carries the sickle bar as the same passes over and adapts itself to the undulations of the ground.

X Q. 65. Hasn't the McCormick mower the swing motion you have described?

212 A. It has not; it has a rolling or rocking motion.

X Q. 66. Why do you say it has a rolling or rocking motion? Point out to the court how there can be any rolling or rocking motion of the finger beam when you simply raise or lower the finger bar and guards by a loose connection and lever on the inner side of the vibratable link.

A. With the oscillation of said bar the p-int of bearing of the shoe upon the ground will continuously change position in the manner that with tipping the guards downward the bearing point of the shoe upon the ground will be carried forward, and with raising the guards that bearing point will be carried towards the heel of the shoe.

X Q. 67. And because the bearing point of the shoe changes somewhat when you raise and lower the points of the cutter bar, for that reason the finger beam of the McCormick mower has a rocking or rolling motion; is that what you mean to testify to?

A. Yes, sir; that is what I mean.

X Q. 68. If the shoe of the McCormick mower was perfectly
213 straight clear to its rear end it could not have what you call this rocking or rolling motion, could it?

A. The rocking or rolling would thereby be limited, but not entirely done away with.

X Q. 69. Do you make any distinction between a rising and falling movement of the points of the guards and a rocking and rolling movement?

A. Yes; a rising and falling movement is entirely different from a rocking movement.

X Q. 70. As I understand you, then, what causes what you call the rocking or rolling movement in the McCormick mower is on

account of the rear of the shoe being curved slightly upward, so that when the guards are raised the point of contact or pressure of this point of the shoe on the ground is changed somewhat; is that it?

A. Not exactly. The shoe passing over uneven ground while the machine is in motion, it is common to curve the end upward for better sliding over obstructions; a flat shoe would rock while
214 being on a hill or supported in its center.

X Q. 71. Can you produce what you call a rocking motion of the shoe or finger beam by actuating the lever with the loose slipping rod when the entire machine is off the ground?

A. No, sir.

X Q. 72. Can you produce this rocking motion of the shoe or finger bar as the — you have described in the McCormick mower when that portion of the heel of the shoe forming the upward curve is off the ground?

A. No, sir.

X Q. 73. Then it is absolutely essential, as I understand you, for the producing what you call this rocking motion in the McCormick mower that the rear curved end of the shoe should rest upon the ground?

A. When the shoe is raised off the ground by the mechanism consisting of the long lever the guard points by that movement are lifted in advance of the rear of the shoe, and while thus elevated above the ground there can be no rocking movement.

X Q. 74. Please answer the question.

215 A. It is not exactly necessary that the rear of the shoe should rest upon the ground to produce the rocking motion as long as the shoe is not lifted by the long lever. The line of gravity of the finger bar in the McCormick machine is toward the forward end, and if not resisted or the guards of the finger bar are not supported by the lever and slip rod the rocking forward is brought about by gravity.

X Q. 75. When the shoe supporting the finger bar is lifted clear of the ground and the lever with the slipping-bar attachment is operated the movement of the sickle bar and guard points thereby is simply a rising and falling one from the fixed point in the rear of the shoe where hinged to the draught rod, is it not?

A. There is neither a swinging nor a rocking motion possible after the sickle bar is lifted off the ground, nor is there any use for it, not in the McCormick machine.

X Q. 76. Is that all the answer you will make to that question?

216 A. That is all.

X Q. 77. You just explain to the court, will you, how you can produce what you have described as a rocking motion in the McCormick mower when any other part of the shoe rests upon the ground except the rear curved heel? Please answer this question direct, without any sup-ositions as to what you consider possible or impossible.

A. The sickle bar and shoe being heavier in front than in the rear they will naturally rock forward, tipping the guard points by

their own weight, if not interfered with by the side lever or slipping rod. In operating that side lever the front of the shoe and sickle bar is raised when the bearing points of the shoe are carried backward, and by releasing that side lever again the shoe will rock forward until the guards will be close to the ground.

X Q. 78. All you mean by that answer is this, isn't it, that when the driver sees a depression in the ground when he is mowing
217 he can release the lever and let the guard points drop by gravity down into the depression, and when the guards reach the terminus of the depression he can bear down on the lever and raise the guards out of the depression?

A. I understand that rocking movement to the sickle bar for following undulations of the ground is to enable the sickle bar to cut close to the ground. The object is not and cannot be to adjust the sickle bar so as to enter the ground, but as to the tilting downward that finger bar is to be self-adjusting to follow the downs and ups in the field, while the lever attachment and the slip rod shown in the McCormick machine can be intended only for raising such guard points above the ground. There will be no attachment required, therefore, for tipping the fingers of the guard from the seat of the driver. I mean in the McCormick mower.

X Q. 79. I ask you again, and desire a direct answer, if the rear of the McCormick shoe was perfectly flat & level, without any upward curvature of any description, would what you call this
218 rocking motion be then produced in the shoe by operating the lever with the slipping-rod attachment?

A. That would entirely depend in that case upon the formation of the ground over which the shoe was pulled. On perfectly level ground the shoe would lift and ride then upon the rear edge of the shoe, and the same would be the case while going down hill; while riding over hill there would still be rocking to the finger bar.

X Q. 80. You mean by riding over a hill that when the forward end of the shoe came in contact with an elevation it would follow over it and the points of the guards would drop down on the other side, don't you?

A. As I understand question 79 it spoke of the guards of the finger bar being lifted up by the side lever and slip rod; and, if so, the shoe would follow the upward irregularities of the hill until reaching an angle less acute than the angle to which the shoe had been raised by the lever and slip rod; then, of course, the guards could not drop so that the shoe would follow the undulations,
219 and said shoe if made perfectly flat on its under side would have to ride with its rear edge upon the ground.

X Q. 81. The Defendants' Exhibit Bartlett & Dodge Patent No. 34545 and Defendants' Bartlett & Dodge Model Exhibit shows a finger beam that may rise and fall at either end and drop forward & backward, does it not?

A. The finger bar of said machine can rise and fall at either end, but the points of the guards can only be lifted above the horizontal line to a very limited extent; it has not that free rocking movement as the Graham or McCormick machine. The long shoe upon which

the finger bar is secured, which extends backward a considerable distance, will lift the finger bar considerably above ground in raising the cutting edge of the finger bar above the horizontal line.

X Q. 82. Is there any more of a shoe in the rear of the cutter bar of the Bartlett & Dodge than there is in the McCormick mower?

A. The rear of the shoe in the Bartlett & Dodge machine
220 being extended rearward on almost a straight line, its supporting the finger bar when the fingers are raised will elevate the finger bar to a greater height than in the McCormick machine, in which the rear end of the shoe is curved upward, even if both shoes were the same length extending rearward.

X Q. 83. Did you mean to be understood as testifying positively this morning that the shoe carrying the rear end of the finger beam always rides on the ground in cutting and is never adjusted or locked slightly above it?

A. I do not remember having testified that.

X Q. 84. What do you testify now—can or cannot this shoe at the inner end of the finger beam in both the McCormick & Graham machines be arranged so as to run slightly above the ground and there locked in cutting the grass?

A. Yes; it could be done, but then the ups and downs over which the wheels of the machine would be passing would raise and lower the finger bar with the frame.

221 X. Q. 85. In your testimony concerning Defendants' Exhibit Ray & Grant Patent 50956 you say there is no free up-and-down movement of the finger bar, as in the Graham machine. What do you mean by "no free up-and-down movement of the finger bar" in that answer as applied both to the Ray & Grant exhibit and to the Graham machine?

A. The inward shoe in the Ray & Grant machine is pivoted at its forward end to a shaft which again is pivoted to the frame of the machine, whereby the rising and falling of the inward end of the finger bar is not independent from the rising and falling of the frame of the machine. By the "free up-and-down movement of the finger bar" I mean the rising and falling of the inward end of the finger bar independent of the frame.

X Q. 86. When you have used the term "vibratable link" in your testimony what have you meant by it? What constitutes a vibratable link as used in connection with the movement of cutter bars in mowers?

A. It means a plate or bar flexibly connecting the finger
222 bar with the frame of the machine. It may be so constructed and hinged with the finger bar as to allow its folding and free movement up and down of the finger bar, but holding the finger bar in a straight line or about a straight line with the link.

X Q. 87. Do you find any vibratable link in the Bartlett & Dodge, Zug, or Ball model exhibits before you?

A. I find a vibratable link in the Zug model, but not in the Bartlett & Dodge and Ball. In the two last-named models only a connecting rod is applied for holding or connecting transversely the finger bar with the frame. The end strain at the finger bar in cut-

ting in the two last-named patents is held or sustained by a long shoe or drag bar.

X Q. 88. And the shoe, being a long shoe in the Ball and Bartlett & Dodge model exhibits, prevents the connection between the rear of the frame and the finger beam from being a vibratable link; is that it?

A. It may be called a vibratable link connection, but, then, the name would make no difference as long as it doesn't perform
223 the same duties as the vibratable link used in the Graham & McCormick machines.

X Q. 89. Your calling the simple rise and falling movement of the guards and cutter bar from a point at the extreme rear end of the shoe in the McCormick mower a rocking and rolling motion doesn't make it that kind of a motion by any means, does it?

A. No, sir.

X Q. 90. Defendants' Exhibit Frank Bramer Patent No. 51946 contains the following language: "The swing bar J, which unites the cutting ap-aratus to the frame of the machine, is attached at its upper end by a ball-&-socket joint which permits the cutting devices to adjust themselves to the surface of the ground automatically;" and on the following page you find this language in the specifications: "A slot is made in plate *l*, as shown in figure 2, through which a set screw may be inserted and screwed into rod I, as indicated in red, for the purpose of rendering the shoe and cutting apparatus
224 rigid and preventing them from having the rolling and undulating motion common to them when not thus secured. This is found to be important when the machine is used for cutting heavy clover and similar substances, but in ordinary use the set screw is not required." You find this exact language just as I have given it to you, do you not?

A. I do.

X Q. 91. What did you mean, then, by stating to the court that "in this machine the vibratable link is connected to a push bar by a loosely fitted hinge and the device is connected therewith, consisting of a slot and a set screw, for holding the finger bar to any desired angle?" Why did you make that statement to the court, you having sworn that you were familiar with the specifications and drawings of that patent, when you must have known the patent contained the exact language upon that point just quoted?

A. My statement is in no respect wrong, and does not contain anything which denies *denies* such wording — specification. A
225 loosely fitting one-way hinge will not give the same capacity of vibration with the same ease as a swivel joint will, and there being no device for tilting the finger bar from the seat of the driver by means of arm *l*, that set screw takes the place of such arm *l* for holding the finger bar to any desired angle relative to the line of draught.

X Q. 92. Why did you attempt to deceive the court by stating in regard to this patent that "the arrangement, as shown, can be intended for but a very little rocking movement and more for adjusting it and holding it to any desired angle," when you must have

known that provision was only made for the use of the set screw in extraordinary cases, as mentioned in the patent, and was not to be applied in ordinary use, and then only for the purpose of making the devices rigid, as described in the patent?

226 A. In stating as I did I have simply given my opinion of the invention as to its practicability. No deceit is meant thereby. If I state my opinion of the Bramer patent the wording of the specifications as to what a machine will do accelerates such operations of the machine. My opinion, as given before, was based more upon the drawing and model than upon the specifications.

X Q. 93. You didn't know anything about what was the object and purpose of that set screw, except from the specifications, drawings, and model, did you?

A. No, sir.

X Q. 94. Well, what reason had you, then, for trying to make the court believe that this set screw was for "holding the finger bar to any desired angle," when the specifications distinctly state that that was not its purpose, except in extraordinary cases, and then not to hold the finger bar to any desired angle, but to render it rigid?

227 Counsel for complainant objects to this question and this line of cross-examination because, in his opinion, the specification fully bears out the statements of the witness, it being apparent from the language that the set screw whenever used was to hold the finger bar to any desired angle, and that the finger bar was to be held down by other devices—down to its work rigidly.

Defendant's counsel objects to the objection and the manner of inserting complainant's counsel's opinion on this record as an expert witness.

A. If that set screw was simply intended for holding the finger bar rigid on a horizontal line, what would then be the use of having a slotted arc-shaped opening in the hinge plate?

X Q. 96. Do you consider that the lever-and-chain connection shown in Defendant's Exhibit "Bramer Duplicate Model No. 51546" and the Bramer patent exhibit of defendants is the equivalent or substantially like the rigid arm connection with the vibratable link shown in the Graham mower & patent?

A. I do not.

X Q. 96. That lever-and-chain connection can be used and controlled by the driver for the purpose of raising and dropping the points of the finger bar in the Frank Bramer exhibit and

228 model, can it not?

A. Yes; for raising the end of the finger bar above ground entirely, but not for tipping the guard *figures* above or below the horizontal line.

Adjourned to September 15th, 1879, at ten o'clock a. m.

SEPTEMBER 15TH—10 o'clock a. m.

Parties met pursuant to adjournment.

Present: As before.

X Q. 97. Did you ever see either the Graham or the McCormick mower in actual operation in a grass field?

A. No, sir.

X Q. 98. Then all you know about this rocking motion of the finger beam in the two machines, as you have termed it, is what you have ascertained in the examination of the patent and models before you of the two machines?

A. Yes, sir.

X Q. 99. A party who was familiar with this class of mowers and had actually operated them in the field would be much better qualified to judge of their movements than you are, would he not?

229 A. As far as practically operating the machine is concerned, I base my opinion in giving testimony upon my knowledge & experince in the construction of machinery generally.

X Q. 100. You state, in your answer in your direct examination, when speaking of the Defendants' Exhibit "Frank Bramer Patent & Model," that "the arrangement as shown can be intended for but a very little rocking movement." Will you please state what there is about those devices shown in the patent and model which prevents the cutter bar from adjusting itself to the surface of the ground in all ordinary grass fields?

A. The thrust rod being hinged to the vibratable link in the manner to push the fingers of the finger bar constantly downward, which, in addition to the friction and resistance to the fingers in passing through the grass in the manner like a comb through the hair will constantly hold said fingers to their lowest position, & will prevent the free rocking movement of the finger bar.

230 X Q. 101. Isn't it desirable in all mowers that the front end or edge of the sickle bar be held down upon the ground and either by gravity through the *wait* of the bar or some other device hold it to its work until it meets some irregularity of surface which it can ride over and thereby cut an even stubble.

A. It is desirable, but in the Bramer machine the joint being above and to the forward end of the vibratable link for forming connection with the thrust rod, the down pressure to the cutting edge of the finger bar would be so great as to cause the points of the finger bar to enter and plow up the ground.

X Q. 102. You can limit or regulate the angle of cut in the McCormick mower by the adjustment of the screw nut upon its thread upon the upper end of the shipping rod, can you not?

A. Yes; to a certain extent.

X Q. 103. You do not deny that it can be so regulated that the point of the guards cannot drop below a certain fixed point, and that that point is regulated by the screw nut at the upper end of

231 the slipping rod, do you, in the McCormick mower?

A. I do not deny that such is the case.

X Q. 104. So I understand you that you find the same movement in the McCormick & Erpelding patent of January 15, 1867, No. 61228, that you do in the Graham model and patent?

A. Yes, sir.

X Q. 105. The points of the finger guards rise and fall at a pivoted point near the rear of the shoe in that patent, do they not?

A. The bearing point may be a little nearer to the rear than to the front, as it appears in the drawing, but there is a rocking movement to the finger bar substantially the same as in the Graham machine.

X Q. 106. Do you consider the movement of any finger bar which is so connected with the machine as to allow it to pass freely over the irregularities of the surface of the ground a rocking movement?

A. Yes, sir; if the shoe itself will follow the irregularities of the ground.

232 X Q. 107. The pivotal point in the McCormick & Erpelding machine, upon which the shoe rises and falls, is in the rear end of the cutter bar and directly at the rear of the shoe, or but a very slight distance from the rear, is it not?

A. I don't see any point upon which that shoe rises. The shoe bears upon the ground and is pivotally connected at its rear to a casting which is secured to an auxil*l*iary frame pivoted to the main frame of the machine in a manner to have a free up-and-down swinging movement.

X Q. 108. Do you find any other pivotal joint shown in that patent which assists or permits the shoe to rise and fall and the points of the guards to be raised and lowered?

A. Yes, sir; there is a brace bar, I, which connects the front of the shoe with the suppleme-tary frame.

X Q. 109. And those are the only two pivotal points you find which, in your opinion, control the rising and falling of the
233 finger beam in the McCormick & Erpelding patent of 1867, are they?

A. Yes, sir. In addition to the pivotal connection of the auxil*l*-ary frame with the main frame, there is also a lever, F, for controlling the rocking movement from the driver's seat while the machine is in operation.

X Q. 110. In your direct examination, while speaking of Graham's July 23d, 1867, patent, marked "Defendant's Exhibit A. B. Graham Patent No. 67041," you say that "In the specification to that patent I find no mention made of the swivel joint M′." Do you not find that joint clearly shown in the drawings of that patent, so that any ordinary mechanic could construct the swivel joint substantially like M′ in Graham's 1868 patent?

A. Yes, sir. The drawing is perfectly plain in showing a swivel joint, which is only somewhat differently constructed from the one marked M′ in the patent in suit, but it is substantially the same thing.

234 X Q. 111. Does not the Graham patent of Feb. 11, 1868, show a rigid arm, *l*, attached to the vibratable link?

A. Yes, sir.

X Q. 112. Is there anything in that patent that shows or indicates that this arm can be any other than a fixed or rigid arm rigidly attached to the vibratable link?

A. The specifications of the Graham patent in suit as to the subject-matter of the invention has the following wording:

"My next improvement consists of the combination of the finger beam, gearing carriage, vibratable link, draught rod, and swivel joints with an arm connected with the finger beam to enable it to be rocked for the purpose of setting its guard fingers at any desirable inclination to a horizontal line."

From this it appears that any connection in the shape of arm *l* or its equivalent for producing such a movement or adjustment from the driver's seat might be applied.

X Q. 113. Do you know of any other meaning for the word
235 "arm," when applied in mechanics, except as a rigid connection, in distinction from a loose or flexible connection?

A. Yes; sometimes we use the word "arm" in places where that arm is not rigid, as in "rocker arm," "swinging arm," "vibrating arm."

X Q. 114. But the arm itself is always rigid, isn't it?

A. Not necessarily; it may turn on a pivot & still be an arm.

X Q. 115. Do you consider that the words "arm" and "lever," when used in the 1868 Graham patent, refer to one and the same thing?

A. There is a distinction in that patent. The arm is connected to the vibratable link and the lever is pivoted to the frame and both are connected by a nearly horizontal rod.

Redirect examination by E. BANNING, Esq.:

R. D. Q. 1. Can you now give any other example of an apparatus or attachment to a reaping machine which is called an arm and which is not rigid in its operations.

A. The arms carrying the rakes in several reapers are
236 loosely jointed.

R. D. Q. 2. State how the cutter bar is formed in the Defend*ent*ants' Exhibit Haines' Patent No. 13523 and how it is affected in operating by the inequalities of the field surface.

A. The extension of the finger bar for connecting the same to the gearing frame being rigid with said finger bar and on a very shallow angle, it will press considerably upon the ground at the joining point of the finger bar and extension, and will kind of counterbalance the extreme end of the finger bar so as to be apt to tip upward on that end. Such rigid connection will also prevent the cutting on the side of a hill while the gearing frame is moving in the valley or upon level ground.

R. D. Q. 3. State how the rising and falling motions of the frame when the machine is in operation will affect the sickle or knife in the Stetson & Maynard machine and others similarly constructed.

A. In such machines the rising and falling of the frame in
237 passing over undulations of the ground will cause the driving motion to the sickle bar to be very irregular, so that the rising of the frame will stop the motion of the sickle and the dropping of that frame will increase the speed of the sickles.

R. D. Q. 4. What effect, if any, will the pressure or resistance of the grass when the machine is in operation have on the adjustment of the guard points of the finger bar to the irregularities of the ground in the Ball machine and others similarly constructed?

A. The friction of the forward end of the shoe in the guide piece F while the machine is in operation will prevent the free rising and falling of the cutting edge of the finger bar when the set screw is not used for holding the finger bar rigid to the drag bar.

Recross-examination by Mr. OFFIELD:

R. X 1. Did you ever see a mower of any kind in actual operation cutting grass?

A. Yes, sir; often; have seen in operation the Buckeye,
238 and, perhaps, others, where I did not inquire about the names of the machine.

R. X 2. Did you ever see machines constructed like the Stetson & Maynard exhibit or the Ball machine in operation?

A. I don't remember if I have or not.

WM. H. LOTZ.

The witness claims fees for five (5) days' attendance, $7.50, which is paid by complainant's sol'or.

ELI WILDER, a witness produced, sworn, and examined on the part of the complainant, deposes and testified as follows:

Direct examination by EPHRAIM BANNING, Esq.:

Q. 1. State your name, age, occupation, and place of residence.

A. My name is Eli Wilder; age, fifty-five years. I am a carpenter and joiner by trade, but am not doing much of anything at present, except looking after my farm in connection with my son. I reside in Waukegan, Illinois.

Q. 2. Are you acquainted with Alvaro B. Graham; and, if
239 so, how long have you known him?

A. I am acquainted with him and have been for from eighteen to twenty-three years.

Q. 3. Have you examined the mowing machine which I now refer to as marked "Graham mower, 1863," and do you understand its mechanism and operation?

A. I have examined it, and understand its mechanism and operation. I saw it this morning at E. Beache's, on Canal street. The first time I saw it was three or four weeks ago, about three or three and a half miles north of Waukegan, at the house of a man named Paddock. I saw it also at my house, in Waukegan, where it was

taken from Paddock's. It was at my house near three weeks. I bought it from Paddock and shipped it down here to Chicago for the complainant's solicitors, for whom I bought it.

Q. 4. Did you ever buy a mowing machine from Alvaro B. Graham; if so, when and where and what kind of a machine was it, and in what respects was it like or unlike the machine mentioned in your last answer?

240 A. I did buy a mowing machine from Alvaro B. Graham. I bought it from him in Waukegan the last days of June or the very first days of July, 1865; my impression is in the very first days of July, 1865, at the beginning of the haying season with us. It was like the one referred to in my answer to Q. 3, marked "Graham mower, 1863." It was the very *fac-simile* of it, with the exception of an immaterial difference in the shoe, and there was a wheel on the outer end of the finger bar which was not on my machine. The difference in the shoe is that there are two standards on the shoe in the machine, I saw this morning, marked "Graham mower, 1863," which were not on the one I bought of Graham in 1865. I refer to the standards extending upward at the rear and middle of the shoe.

Q. 5. State whether or not you afterwards used the machine which you purchased from Graham; and, if so, when, where, and what doing.

241 A. I did; right through haying in 1865; the whole season, commencing about July 1st, in the town of Warren, Lake county, Illinois. I cut forty acres of meadow there and then took it into the town of Waukegan, to my home, and used it the balance of the season to finish my work there. I used it in 1865 to cut about seventy-five acres of grass; was using it probably about four weeks off and on; not steady, but some during about that period in 1865. I used that machine altogether about five years from that time; owned it and used it during the haying season every year for about five years. I ran about 100 acres of grass every year after 1865.

Q. 6. State how that machine worked in 1865 and afterwards.

A. It worked well; it was a good machine.

Q. 7. What became of that machine, if you know?

A. I let a man by the name of Legnard, a neighbor of mine, have it when I sold out my farm, about 1870. I have made effort to find it now, but couldn't find it.

242 Q. 8. Did you know personally of Mr. Graham's having been engaged in working on his mowing machines before 1865?

A. I did; it came first under my personal observation in 1864, when I saw him at work on it.

Q. 9. How do you remember that you purchased your machine from him in 1865?

A. Well, sir, I bought this piece of land in the town of Warren in 1864, and bought this machine to cut the hay on that land the year following; that is the way I know I bought the machine in 1865.

Q. 10. State what Mr. Graham said to you, if anything, at the time you purchased your machine about his having sold any before that time.

(Objected to by defendants' counsel as incompetent.)

A. He said he had not sold any.

Cross-examination by C. K. OFFIELD, Esq., of counsel for defendants:

X Q. 1. The Alvaro B. Graham you say you have known from 18 to 23 years is the patentee of the patent relied on in this
243 suit and the brother of the complainant, is he?

A. I know nothing about it; never saw the patent, to my knowledge. My understanding is that he is the patentee & the brother of the complainant.

X Q. 2. Where was it that you bought of A. B. Graham, the patentee, the machine which you state was the very *fac-simile* of the introduced Exhibit "Graham Mower, 1863?"

A. In Waukegan, Illinois.

X Q. 3. Did you buy it in open market—I mean was it an ordinary purchase and sale, such as you would have made of any well-known mower in the open market at that time?

A. No; I can't say it was, from the fact that its representation wasn't established; it was a new thing. I knew the machine. I had several conversations with him before I bought it, and the inducements that he held out tempted me to take that machine and try it.

X Q. 4. It was sold to you publicly, was it?

A. I can't say there was anything private about it. There
244 was no regular house where he kept machines for sale.

X Q. 5. Did he have any other mowing machines of exactly the same kind that he was trying to sell publicly at the same time?

A. Well, I think he did.

(Counsel for the complainant admits and states that Alvaro B. Graham, the patentee, offered for sale and sold publicly his machines like the one marked "Graham mower, 1863," in the summer of 1865, commencing in the latter part of June, at Waukegan, Illinois, and says he has authority from the complainant to make this statement.)

ELI WILDER.

The witness claims fees for one day's attendance and mileage from Waukegan to Chicago (36 miles), $5.10, which is paid by complainant's solicitors.

FENNER W. WARD, a witness produced, sworn, and examined on the part of the complainant, deposes and testified as follows:

245 Direct examination by THOMAS A. BANNING, Esq., of counsel for complainant:

Q. 1. State your name, age, occupation, and place of residence.

A. My name is Fenner W. Ward; age, fifty-seven years. I am running a farm and a cider mill. I live in the city of Waukegan, Illinois.

Q. 2. How long have you known Alvaro B. Graham, the patentee of the patent sued on in this case?

A. Since 1855.

Q. 3. Did you ever work with him on his mowing or reaping machines; if so, when & what doing?

A. I did in 1863; first in Waukegan. I set the gear on some of the machines that he built in that year. I was working with said Graham at the shop of Porter & Brother, in Waukegan. I remember to have been there in March. I think I left for a short time and was there again in June. Graham was there all the time I was there. He was making mowing machines. I worked for George Cleveland in 1864, building reaping & sewing machines. I think Graham & Cleveland were together in business. I worked there from some time in April, 1864, to about fore part of July, 1864—not all the time.

246 Q. 4. How do you know that you worked in 1863 and 1864, as stated in your answer above?

A. I know from entries that I made in this memorandum book. This shows I first charged April 30th, 1864, George Cleveland five days' work, and the entries run on until July 2d, 1864. I made these entries at the time when they are dated as the account I was keeping with Cleveland. I know I worked for Porter & Bro. in 1863 on these machines, because I worked there the year before I worked for Cleveland.

Q. 5. Have you seen the machine marked "Graham mower, 1863;" and, if so, is it similar to the machines you were working with him on in 1863 and 1864 in its general construction or not?

A. I saw that machine this morning. It is similar to the machines I worked on with Graham in 1863 and 1864, generally.

Q. 6. Did you ever take any of those machines out and try or experiment with them in the field in 1864? If so, state what you did and all about it.

247 A. I did; I took one of the Cleveland machines out. It mowed very well in timothy & clover grass. I put it into thick red-top and there it clogged and I couldn't use it. I think I didn't cut over two or *or* three acres in all. That was in the summer of 1864, I think. Cleveland wanted me to take it out and try it. It was a machine that had been run by somebody. I don't know who.

Cross-examination by Mr. OFFIELD, counsel for defendant-:

X Q. 1. How many machines did you see or assist Mr. Graham to make in 1863 like the "Graham mower, 1863," which you examined this morning?

A. I do not know how many.

X Q. 2. Approximate the number—ten or twelve?

A. I should think as many as that.

X Q. 3. Were these machines built in 1863 and put upon the market for sale in that year?

A. They were built in 1863. I don't know whether they were put upon the market or not.

X Q. 4. Do you know what those ten or twelve machines were built for in 1863 by Mr. Graham?

248 A. I don't know what they were built for.

X Q. 5. Were any of them offered for sale?

A. I don't know; presume they were, but don't remember seeing any of them offered for sale.

X Q. 6. Where were they kept while you saw them?

A. The machines were not completed when I left there.

X Q. 7. Were you not working to — those machines completed for the grass harvest of 1863?

A. I suppose so.

X Q. 8. Don't you know that they were completed for that harvest?

A. I do not.

X Q. 9. In what respect, if any, did those ten or twelve mowers built by Graham in 1863 differ from the "Graham mower, 1863," which you have examined this morning? Give your answer particularly as to the finger bar and the mechanism for operating the finger bar and for changing its position.

A. The draught rod was connected with the main shaft or axle at its outer end. It was connected with the shoe a little
249 different from the draught rod in the "Graham mower, 1863." The forward end of the shoe was connected with it, but differently.

X Q. 10. Otherwise the machines were the same?

A. I think the outer shoe was different at the end of the finger beam; the manner of rocking the finger bar was the same. The joint connecting the vibratable link to the rear end of the frame was not exactly the same as in this machine. It was a swivel joint, but differently constructed. I think the joint connecting the draught rod to the shoe was a swivel when it connected at the hub, and not at the shoe. I am not positive about that, but that is my impression. I know there was a swivel there somewhere.

X Q. 11. Was Graham in partnership or business with anybody in 1863 in the manufacture of those machines?

A. I suppose he was with Porter & Bro., now living in Waukegan.

X Q. 12. Did you build the same style of machine for
250 Graham in 1864 that you did in 1863?

A. They were not exactly the same, though their general principles were the same.

X Q. 13. What, if any, difference was there in the mechanism connected with and moving the finger bar in the 1864 machine?

A. There was no material difference in the operating of the finger bar. It was rocked in the same manner and jointed to the frame in the same way, but more substantially.

X Q. 14. How many of those machines did Graham or Graham & Cleveland build in 1864?

A. I don't remember, but think they built twenty-five or more in 1864.

X Q. 15. Were they in partnership for the purpose of building those machines in 1864?

A. I suppose they were; I never saw their partnership papers. They did no other kind of work, to my knowledge.

X Q. 17. Were these machines built in 1864 offered for sale by either Graham or Cleveland?

251 A. I couldn't say as to that. I presume they were built for sale. They were kept back of the shop where they were built when they were finished. They were run out back of the shop. I could not say that they were always kept there. Cleveland moved them over & stored them in his barn the next winter, but I don't know as he moved them all over. The land on which I cut the grass in 1864 belonged to George A. Fellows. It was my own grass that I cut.

FENNER W. WARD.

The witness claims fees for one day's attendance and milage from his residence, two miles from Waukegan, to Chicago (38 miles), $5.30, which is p'd by comp't's sol's.

J. BROWN PORTER, a witness produced, sworn, and examined on the part of the complainant, deposed and testified as follows:

Direct examination by THOMAS A. BANNING, Esq., of counsel for the complainant:

Q. 1. State your name, age, occupation, and place of residence.

252 A. My name is J. Brown Porter; am sixty-one years old, and by occupation a contractor, builder, and carpenter, and reside at Waukegan, Illinois.

Q. 2. What business were you in in 1863 and from that on to 1865 and afterwards, and who composed your firm?

A. I was running a planing mill, sash and door factory building, and so on in Waukegan. Myself and my brother, Benjamin F. Porter, comprised the firm, which was called Porter & Brother.

Q. 3. Did your firm ever have any business dealings or arrangements with Alvaro B. Graham, the patentee named in the patent sued on in this case? If so, when and what?

A. Well, we did. We entered into an agreement to build some reapers and mowers with him in the winter of 1862 and 1863 and the following spring. We had no written agreement. He presented a model for a reaper and mower, and we were to go on and build

some together. I think Porter & Brother were to furnish the capital, and Mr. Graham was to go on and superintend the building after the model he presented. We went on and built some
253 machines, I think. We started a dozen, but don't remember certainly. I think we got four that went into the field. We quit working on that agreement that season about the middle of August—perhaps earlier or later. I am not positive. In 1865 I think we began again. We overhauled some of them that we had started — 1863. We put out that season I don't know how many, but I think four or five. We began in February or March, I guess, of 1865, and worked along till harvest.

Q. 4. Did your operations of 1863, in reference to which you have testified, prove successful or not?

A. I think not very.

Q. 5. Did you have anything to do personally in reference to those machines in 1863 or not?

A. I think I did not, to work on them; nothing, only I was interested in the machine. We were running our saws, &c., and whatever we could do for them in the wood-work we did.

Q. 6. Did you ever go out into the field personally to try any of them or not?

A. I did. I think I went up to Mr. Dooley's and saw him
254 cutting some grass, and I was in the field of Mr. Bull's & saw him cutting some wheat.

Q. 7. Did the machines prove successful or not in those trials?

(Objected to as incompetent, it being the duty of the witness to state only facts, by defendants' counsel. The court can judge whether the facts stated can show successful operation or not.)

A. I think not.

Q. 8. How do — now remember that it was 1863 when your firm was first engaged with Graham on those machines?

A. I recollect it from the charges made in the book—where I charged him with money and other things which he had. The book shows that he was at work some time along in February, 1863. Here is one entry of February 10th, another of February 24th, another of March 7th, and others later; they are all along here. These entries are all in 1863; this is a book that was kept at that time; it is the day book of Porter & Brother; the entries were made at that time. I think he had worked at the reapers some be-
255 fore we made any entries; that is my opinion about it. I don't find anything in the book showing what he was working at; I know he was working on those reapers and mowers because he never worked for us at anything else, I think. I could not give the year when Graham was working there, except from the books. I am clear about this, that we were to build the machines and try to make a reaper or mower, or combined one, that would work. I am not clear about other matters connected with our agreement, except as I have testified.

Q. 9. Why did your firm withdraw from the enterprise in the fall of 1863?

A. Because we couldn't see any money in it for us; we lost some money in it; I couldn't tell how much; it would be all guess-work.

Q. 10. Had you or your firm ever been engaged in the manufacture of mowing & reaping machines before that time, and did you have any special facilities for such work?

256 A. We never had been in that business and had no special facilities for it, except the saws, &c., for making the wood-work.

Cross-examination by Mr. OFFIELD:

X Q. 1. As I understand, you completed four of the Graham mowers that went into the field in 1863; is that right?

A. I think it is, but am not positive as to the number.

X Q. 2. You mean by "going into the field," do you not, that they cut grass in the spring or summer of 1863?

A. Yes, sir; grass and grain.

X Q. 3. Were these machines completed by you before the harvest of 1863 and put upon the market for sale?

A. They were if they would work. They were on trial.

X Q. 4. And you would have sold any one of those completed machines without any condition if any person had offered you your price, would you not?

A. I think we would.

X Q. 5. They were exhibited publicly, were they not, before the harvest of 1863?

A. They were.

X Q. 6. Did you sell these four machines that went into
257 the field in 1863 upon any terms or conditions?

A. They were put out, and if they worked to the farmer's satisfaction they were to keep them, and if not they were to come back, and they came back.

X Q. 7. That is, the farmers kept them all summer, cut their grass, and completed their harvest with them and then brought them back?

A. I do not remember how long they kept them. My memory is not clear, but I do not think any were sold that season.

X Q. 8. You mean when you say that none were sold that season that you didn't get any pay for any of them?

A. Yes, sir.

X Q. 9. Mention the names of some or all of the parties who purchased those machines in 1863 under the agreement that they were to *to* take them and use them and pay a certain price for them if they proved satisfactory.

(Objected to by counsel for complainant as assuming sales and matters which have not been proved and to which the wit-
258 ness has not testified, the witness not having said that any sales were ever made.)

A. We manufactured some in 1863 and some in 1865, and to be clear which took them in 1863 and which in 1865—I may be mixed

a little—Mr. Carfield had one machine and Richard Dooley had one; I think Mr. Ichabod Bull tried one. Those are all that I can call to mind now.

X Q. 10. Have you any personal knowledge as to how those Graham machines operated in the harvest field in 1863?

A. Yes. I saw them work in the grass at Mr. Dooley's, on- of them, and one in the grain at Mr. Bull's, but it was about the first reaper I ever saw run and I was no judge. To me it looked as though they ran pretty good.

X Q. 11. How much grass did the machine you saw cut?

A. Mr. Dooley had gone around a piece about an acre or two, and I followed him around, and also Mr. Bull in the grain.

X Q. 12. And you saw nothing except *at* satisfactory working of these machines in the grass and grain field?

259 A. I saw nothing else that I recollect of. I was there but a little while. I just drove up and followed them around.

X Q. 13. And there was no dissatisfaction expressed as to the working of the machines?

A. Not that I recollect of.

X Q. 14. Have you anything, except your general recollection, from which you testify as to these machines being brought back?

A. I think not.

X Q. 15. Have you seen this "Graham mower, 1863," referred to by one or two of the previous witnesses, and now at Beache's, on S. Canal St., in this city?

A. Yes; I saw it this morning and years ago.

X Q. 16. Do you recollect distinctly the entire construction and mechanism of the Graham machines you built and which went into the harvest field in 1863?

A. I was not very clear. I never worked upon them personally.

X Q. 17. Can you state whether the "Graham mower, 1863," which you saw this morning, is one of the original mowers you have testified about as having built for Graham in 1863?

260 A. I should think it was; it looks very like it.

X Q. 18. And you make this statement from recognizing the machine and its construction?

A. Yes, sir.

X Q. 19. You mean when you stated that you overhauled some of the Graham machines in 1865 that you changed some of the machines which you had built in 1865, do you not?

A. Yes, sir; we finished up some, I think, that we started in 1863, and, I think, fixed up some that had been brought back. I can't recollect distinctly about that. It has been many years since.

X Q. 20. Some of the machines which you revamped in 1865 had been used in the meantime since your first construction of them in 1863?

A. I don't recollect that they were; might have been and they might not. I have no recollection about it.

X Q. 21. Do you know anything about the working or construction of these Graham mowers constructed, as you have testified, during the harvest of 1864?

261 A. I don't recollect anything about them in 1864—nothing definite.

X Q. 22. How did you happen to go into the manufacture of these same mowers again in 1865 if you had lost money on them two years before?

A. Well, we had some partly made; had been to some considerable expense, and then Mr. Graham had had one year's experience more, and he thought he could make it run successfully.

X Q. 23. Did not Mr. Graham always claim to you that the machines which you built in 1863 would work successfully or were practical working machines?

A. I do not now recollect that he did claim it or did not. It was evident enough that they came back; that was in 1863.

J. B. PORTER.

The witness claims fees for one day's attendance and mileage from Waukegan to Chicago (36 miles), $5.10, which is paid by compl't's sol'rs.

ALVARO B. GRAHAM, a witness produced, sworn, and exam-
262 ined on the part of the complainant, deposed and testified as follows:

Direct examination by THOMAS A. BANNING, Esq.:

Q. 1. State your name, age, occupation, and place of residence.

A. My name is Alvaro B. Graham; aged forty-nine years; I am not in business at present time; was in mowing machine business up to last month, traveling for Climax reapers & mowers; I live in Chicago, Illinois.

Q. 2. Are you the patentee named in the patent sued on in this case and also in patent No. 67041, and are you the inventor of the inventions secured by these two patents, respectively?

A. I am.

Q. 3. State what practical experience, if any, you have had in connection with reapers and mowers.

A. I have been engaged in the business of making, selling, and handling reapers and mowers for some sixteen or eighteen years. I have used them in the field. I have been engaged in handling the Brudich and Kirby, manufactured by D. M. Osborn & Co., of Auburn, N. Y.; also Walter A. Wood's machine, of Hoosic Falls,
263 N. Y. In the time I have attended a number of field trials where there were various other machines in operation; have paid more or less attention to all the standard machines in the market in practical operation.

Q. 4. State what business you were in before making the invention in controversy in this suit, and state fully the history of such invention and of your proceedings in obtaining the patent sued on.

A. I was raised on a farm until the spring of 1848, when I was apprenticed to the wagon-maker's trade. I followed that trade the most of the time until the spring of 1858. In the spring of that year I bought me a farm and and went to farming. In the summer

season of 1859 I bought a reaper made by Kirk, Marsh & Smith, of Waukegan, Illinois. I used that through the harvest that year, though it was very unsatisfactory in its operation, and I laid it by. In the spring of 1861 I sold my farm or rather traded for a larger stock farm in Iowa, and in the summer of 1862 I was out of
264 business, doing little or nothing. I concluded that I would take the old reaper and try to make a mower of it. I reduced it or improved it to two-wheeled, hinge-barred mowing machine, using the machinery of the old machine. That was the first two-wheeled, hinge-barred mower I had ever seen up to that time.

In the winter of 1862 and 1863 I constructed a model showing something of the finger-bar attachment for a two-wheeled flexible-barred mowing machine with a tilting or rocking capacity. That was in either December, 1862, or January, 1863; I am not positive which. Soon after constructing this model I succeeded in making an arrangement with Porter & Brother, of Waukegan, Illinois, to embark in the enterprise of manufacturing reapers and mowers, and by reference to their day book I find that during the month of February, 1863, I was at work on the machines according to the model spoken of. I think we completed three, which were quite crude affairs.

In November and December, 1865, I constructed a model.
265 I have a note here which refreshes my memory as to the time. I hired the money at the time. I was making the model from my uncle David Graham's, of Coldwater, Michigan. I will say that my uncle is now deceased. I went to Coldwater, Michigan, at this time to make this model for the two reasons that my oldest brother, O. C. Graham, now deceased, was a machinist & carrying on the machinist business, and he very kindly offered to assist me in making this model (he having facilities for the work) if I would visit him at that time. The other of the two reasons was to secure money from my uncle to prosecute my claim or application for a patent. I was there about two weeks. I made the model while there. That model was the model I sent to the Patent Office for my first application for a patent. That is the only time I was ever at Coldwater on any business after 1854, and this note is the only business transaction I ever had with my uncle, and is for the only money I ever borrowed from him.

266 Counsel for complainant here offers said note in evidence and the same is as follows:

$200. NOVEMBER 13TH, 1863.

One year after date I promise to pay to David Graham or bearer two hundred dollars, with interest at ten per cent., collateral to mortgage of even date, value received.

A. B. GRAHAM.

Across the face of said note is written:

Judgment was obtained in the county court of Lake county and State of Illinois on the fifteenth (15th) day of October, A. D. 1867.

LEWIS C. DORSETT,
County Clerk of said Lake County, Illinois.

After completing my model I came home to Waukegan, Ills., and sent the model, together with a letter of information or instruction, to Munn & Co., 37 Park Row, New York city.

I then made an arrangement with a man named George Cleve-
land, of Waukegan, Porter & Bro. having in the fall or Au-
267 gust of 1863 abandoned the enterprise.

The arrangement made with Cleveland I find is dated February 4th, 1864. The paper I have in my hands is a copy of the contract between Cleveland and myself. I suppose Mr. Cleveland has the original. It was left with his attorney and cancelled, in presence of that attorney and myself, Sept. 13th, 1864, at the same time the endorsement now seen on the copy was written.

I have not got the original and am not able to get it. This copy is all that I have that relates to the contract. I think this copy was made at the time the original was cancelled. It is like the original except as to signatures, so far as I know and have reason to believe. I was present when the contract was cancelled and received this copy at that time.

My recollection is that the original was left with Cleveland's attorney to make a copy and this copy was made afterwards, and it was not delivered to me until the agreement was cancelled.

Counsel for the complainant offers said copy of the agree-
268 ment referred to, dated February 4, 1864, and the same is marked "Graham Exhibit C."

Defendants' counsel objects to the introduction of this paper for the reason that the loss of the original has not been legally or sufficiently proved, and for the further reason that the witness has not as yet testified that the offered paper is a true and exact copy of the original, but, on the contrary, has testified to such facts as show that he has no knowledge on that point.

Cleveland and myself went on and made a few machines—I can't tell just how many, perhaps ten or twelve—in the spring & summer of 1864. In Sept., 1864—I see by the date of the cancellation of the contract—Cleveland ceased to prosecute the enterprise farther. The fall and winter following I made an arrangement with Porter
& Bro. to take hold of the old experimental machines of 1863
269 and reconstruct them and try to get something out of them.

In the winter of 1864 and 1865 and following spring and summer we got out four machines that I can now remember and place, made out of the old machines of 1863. Those machines were sold in the summer of 1865, one of them to Eli Wilder, of the town of Warren, Lake Co., Ills.; another one to one Shanber (I can't give his initials or first name), of same town; one to John Carfield, of the town of Avon, Lake county; the other one to a Mr. Merchant (I can't give his name or initials either), of Waukegan, Lake county. Those four machines were used in the haying and harvest season of 1865, and for a numbr of years thereafter, to my certain knowledge.

In the fall of 1865 W. B. Werden came to me and desired to engage in the enterprise. On Nov. 25th, 1865, I entered into a con-

tract with him and Cyrus A. Werden. In 1866 they undertook to build fifty machines. I think they got out eight or possibly
270 ten of them. In 1867 they made twenty-five; in 1868 they made thirty, and in 1869 one hundred, and they, in the fall of 1869, concluded to abandon the enterprise.

The machines was in the market from 1865 to 1869, inclusive, being manufactured at Waukegan, Illinois. It is manufactured now by the Wayne Agricultural Company of Richmond, Ind., under a license, on a royalty. At the time that I got up the first model spoken of, in the winter of 1862 and 1863, I wrote Munn & Co. (I know I got up in the night to write them), giving them a description as well as I could in a letter & asking them for advice. They informed me by letter that they couldn't give me anything like a satisfactory opinion, in the absence of the model or mechanical drawings.

The next step I took in that direction was to make the model—the second model spoken of—in Nov. & Dec., 1863, and sent it to Munn & Co., with my application for a patent and the neces-
271 sary fees. In the course of time—I can't tell just how long, but should say in from one to two months after sending the model and fees—they returned to me my application papers for my oath and execution. I executed them and returned them to Munn & Co. at once. I believe that execution of the papers by me was dated Feb. 25th, 1864. It run along a considerable time—some months I should say—and I heard nothing from Munn & Co. beyond the simple acknowledgement of the return of the papers and additional fees. Their fee became due when the executed papers were returned to them.

After some months I wrote them, inquiring as to progress and prospects, and they replied to me very courteously and advised me of the fact that my application was moving on in the regular way.

I wrote them a number of times afterwards, and from their replies I was led to believe that my application would be acted
272 upon as soon as the patent authorities could reach it. It being my first experience in attempting to procure a patent, I had no means of knowing the length of time necessary to accomplish it. At the same time I was very desirous of getting out my patent, as I looked upon it as my capital or stock in trade. Whenever I would approach a man to join me in the enterprise the uncertainty of my obtaining a patent was one of the strongest objections that was raised. Finally, in the winter or spring of 1866, I received from Munn & Co. a notice that my application had been acted upon and a part of it had been allowed and a part rejected. They advised me to accept what the office had allowed me. In their opinion, I would not be able to get what I wanted by an appeal. At the same time, if I thought otherwise, they would conduct an appeal for me for a certain sum; I forget what. I afterwards took the case out of their hands and placed it in the hands of E. S. Renwick, of New York
273 city, at the same time saying to Mr. Renwick that I was about to make an application for another patent on other improvements. Mr. Wenwrick advised me that my better way would be to

withdraw the claims, which I supposed must be appealed upon in order to obtain my rights and embody them in the application that I was then about to make and accept the patent as allowed on the first application.

I pursued this course, and on the 23d of July, 1867, a patent on my first application was granted or issued, and on Feb. 11th, 1868, the patent was allowed on my second application. Since that time I have taken out two other patents, solicited by Mr. Renwick, for improvements on mowing machines. I have not the correspondence. I have not a letter that I can find either from Munn & Co. or from Mr. Wrenwick, and I never kept any copies of any of
274 my letters to either of them. I have no copies of any of the letters. I did not consider the correspondence of any importance after having obtained my patent, and for the last ten years I have been very unsettled, and papers that might be of some importance, other than correspondence, have become lost or destroyed. I conducted the correspondence for myself with Munn and Co. up to at least December, 1865, and W. B. Werden, of Waukegan, conducted the correspondence with Mr. Renwick, but I saw the letters from myself to him & dictated them to some extent and saw Renwick's letters in answer. It is not in my power to produce any of those letters.

If there are any letters or copies belonging to the correspondence with either Munn & Co. or Renwick they are in the hand's or possession of the Werdens, of Waukegan; and I am not personally on very friendly terms with them, and consequently if they have any such correspondence preserved I am unable to obtain it. At
275 one time I took out a writ of replevin and sent an officer to take possession of those papers and correspondence.

The officer, who was Silas King, of the town of Grant, Lake Co., reported to me that he was assailed by three men in Werden's store and restrained while the papers were taken from the safe and put beyond his reach.

Defendants' counsel objects to all that part of the answer to the last question put to this witness which relates to alleged correspondence with third parties and their letters or replies to him, and to all that part of his answer referring to statements and conversations made and had by him to and with third parties and the statements of third parties to him as incompetent and irrelevant, no foundation having been layed to prove the contents of lost documents or lost writings, and the testimony of the witness himself showing
276 that in all probabilities the writings he refers to are within the jurisdiction of this court and can be produced by a *subpœna duces tecum*. This objection also extends to all the personal speculations and surmises of the witness introduced at different points in his answer.

Complainant's counsel is notified that at the hearing of this cause all parts of the above answer will be moved to be stricken out, except such relevant portions as appears from the answer of the witness to be founded on personal or actual knowledge.

Adjourned to September 16th, 1879, at ten o'clock a. m.

SEPTEMBER 16TH, 1879—10 o'clock a. m.

Parties met pursuant to adjournment.
Present: As before.

Q. 5. How is it that you now come to have the note and copy of the contract offered in evidence above and not any of the correspondence relating to your patents or proceedings in the Patent Office?

277 A. About a year from the time of the execution of that note my uncle died. The note passed into the hands of the administrator of his estate, and he sued me upon the note in the county court of Lake county, Illinois, and the note has remained in the files of that court until within a very few days. I will say, however, I have paid the judgment and costs rendered upon the note. The copy of the Cleveland contract I found a short time ago in looking over my old papers. It had been preserved, I presume, from the fact that it had the appearance of document rather than of a letter. I also found quite a number of other similar documents relating to other matters at the same time. I do not know where Mr. Cleveland is; I have not heard from him for many years.

Q. 6. Have you searched among all your papers or not for letters or other papers relating to your patent matters now in question in this suit?

278 A. I have, but have failed to find any relating to this case or these facts. I have looked over all the old papers and correspondence that are now in my possession, and I do not know of any other place where I could look with any possibility of finding any of them.

Q. 7. State fully how your machines were experimented with or used in 1863 and 1864, and state also whether they were successful; and, if not, what was the matter with them, in each of those years.

A. The first one that went from the shop to the field went out onto my old place. I went out there and put it into the grass. I should say that it stayed with us an hour or two—only a very short time. In that machine I had a corrugated iron finger bar. The first difficulty I met with was the doubling up or twisting of that bar. I returned to the shop and made a wooden finger bar and put that into the machine. I am not certain whether I put it into

279 that machine or not, but think I put it into one nearer town. My old farm was in the town of Avon, Lake county, some fourteen or fifteen miles from Waukegan, west. I afterwards put the wooden finger bar into the remaining two that were got out.

The machines were anything but a success; they were a failure. The other two were tried, one on the farm of Ichabod Bull, some four or five miles north of Waukegan, and the other on the farm of Mr. Dooley, in the same neighborhood. Mr. Bull, I think, gave us up in the course of a day or two because the machine would not do his work. We came into town and bought another machine. I experimented then for some time—don't know just how long—applying different devices to the machine on the farm of Mr. Dooley.

I believe that was the extent of my experimenting that season. I can't tell how much was cut on either farm.

The trials were under my personal supervision. In 1864 I am unable to place but one machine; that machine was tried
280 in the town of Warren, Lake county, on the farm of George Stearns, by me; that was returned; it didn't work at all.

The machine was there several days; think it was used two or three different times, a few minutes at a time. Oh, yes; there was another machine which Mr. Cleveland had Mr. Fenner W. Ward take out late in the season after having made some changes in it; how much Mr. Ward did with that I do not know, except that Mr. Ward told me that he cut an acre or two with it, and in light grass it done tolerably well, but would virtually do nothing in heavy grass. That is the substance of Mr. Ward's report to me. As the machines were then constructed they were not very scientifically constructed.

This model, "Defendants' Exhibit Model Graham Patent, 1867," differs from the machines of 1863 in this, the draught rod in the machines of 1863 was connected at its forward end to the
281 main axle outside the driving wheel, and the connections at the front of the shoe were constructed with a couple of lugs or ears cast upon the upper face of the main shoe at its forward end, to which the draught rod was pivoted through an intermediate piece by a horizontal pin or hinge joint when the bar was upon the ground. Just forward of this pivot or joint there was another joint in the draught rod similar to this one about an inch ahead of the shoe.

The joint connecting the vibratable link to the rear corner of the main frame was constructed like this in this model, and I found it impossible to keep that in place; it would vibrate, counter to the stroke of the pitman and sickle. The member of said joint, model K, in my 1867 patent was inserted through the wood-work of the main frame, and the vibration of the machine wore out the
282 hole in the wood and enlarged it. We had great difficulty also with one caster wheel and the lever or beam that carried it; it would swing and twist and break down. I believe that is briefly the principal difficulties we had in 1863.

In 1864 the draught rod was connected to the front of the frame, and the joint at the shoe was similar to the one in this model except the joint previously spoken of as being about an inch forward of the shoe in this model. The draught rod run directly back to the shoe and connected similar to this with a snipe-bill joint to the dead-eye that passed through the front of the shoe.

The joint connecting the vibratable link to the rear corner of the main frame had the member marked K inserted into a cast-iron box located on the upper side of the rear corner of the main frame. That also proved to be inef-icient. The member K, when confined sufficiently close to overcome the counter vibration to the pit-
283 man and sickle, would break off at the shoulder and box. The machine would not cut in heavy grass. It would choke up and stop. Our driving gear also broke badly so far as they were tried that season.

Q. 8. State whether you made any efforts to overcome these imperfections or difficulties in your machine; and, if so, what and when.

A. I did. In the winter & spring of 1864 and 1865 I was at work overhauling the machines made in 1863—reconstructed them and made such mechanical changes as my experience before spoken of had suggested; and those machines proved successful. In fact I devoted my entire time to these trials and experiments from the winter of 1863 and 1864 up to the close of harvest in 1865. I never had any experience in the way of constructing machinery of that description previous to 1862, and I had no facilities whatever for producing this work. Neither Porter & Bro. nor Cleveland had ever been engaged in the business before, to my knowledge.

284 Q. 9. How was it that you generally tried your machines in 1863 and 1864 on the farms of other persons?

A. The first machine, I think, I hired a team to take out and try, and, after that, having no team or farm of my own to experiment on or with, I induced the parties spoken of owning the farm where the trials were made to take the machines out and try to do their work with them, offering them the machines at a low price if they proved successful; if not, they were not obligated for them in any manner. The machines of 1863 and 1864 did not prove successful, and consequently there were no sales made. It was, of course, necessary to offer the farmers some inducements to get them to try an experiment of that kind. Another reason is that we wanted the machines tried by practical farmers in a practical way.

285 Q. 10. During the time the machines were being tried in 1863 and 1864 were you not looking after them personally and endeavoring to correct and improve them as might appear necessary?

A. I was; I devoted my entire time, night and day, to that object, except, perhaps, very late in the season of 1864, through a little misunderstanding between myself and Mr. Cleveland. I did not have anything to do with the machine taken out and tried by Mr. Ward. I was constantly with the machine or in the shop making such changes as the case in hand seemed to require, trying various methods to overcome the difficulties.

Q. 11. When and to whom did you make your first sale of any of those machines?

A. I think the first machine sold was either to Eli Wilder or John Carfield, in the last of June or first of July, 1865. Those two men bought about the same time. Those machines were taken out on trial as those previously spoken of, and the sales consum-ated after harvest.

286 Q. 12. Have you examined the full-sized mower which I now refer to as "Graham mower, 1863?" If so, state what it is.

A. I have examined the machine and find it to be a machine that was in part made in 1863, reconstructed and sold in the summer of 1865. It was one of the four I spoke of in my previous testimony as sold in 1865. I will say, however, that the shoes on the finger

bar are of a later make. I made some improvements in 1867 in those shoes, and I gave the new shoes to my patrons of 1865 in two or three instances; among the number to this machine.

Counsel for complainant offers said machine in evidence, and the same is marked Graham mower, 1863.

Q. 13. State what changes you made in your machine, so far as regards the matter in controversy in this suit, after your trials of 1864.

A. I changed the construction of the swivel joint designated
287 as M in the patent of 1868, and constructed it substantially as in the model marked "Graham model No. 1." That change I made in 1865 after machines went into the field. I made the chang- in the joint connecting the draught rod to the shoe, so as to make it of the same construction as the swivel joint M′ in the patent in suit, in the winter of 1865 and 1866 or early in the spring following. The object in making this joint M′ in this manner was simply to overcome the discrepancies in the blacksmith's work, in order that I might get the draught rod its proper length.

Q. 14. What difficulties, if any, did you have to contend with in making and perfecting your invention involved in this suit? State fully.

A. I had the difficulties usually attending such enterprises. I had neither means nor facilities for putting any ideas into practical form, and in this particular line of invention or experimenting the rea-
son for practical operation, testing different methods for the
288 accomplishment of the object, is very short, only a few weeks at most during the year that the mechanism could be tested practically.

It is not like a thing a man can experiment on every day in the year. In addition to that, the farmer's time is very valuable to him, and I found it almost an impossibility to induce farmers to try my experiments. Of course, the market was supplied with what were known as standard machines in the same line, and all well represented in the market, and it required a good deal of pressure to persuade a farmer to take the chances on his crop, perhaps, and the possible loss of his time while giving them a trial.

Q. 15. What did you have to do in order to get your machines tried, particularly in 1863 and 1864?

A. I had to almost offer to give them away; I had to agree to let
them have machines at very low prices, compared with ma-
289 chines in the market, in the event that the machines were successful, and if not successful they were our property.

Q. 16. Was this the only way you could get them tried, or did you have horses or money with which to hire horses to try them yourself, and was it necessary or not for you to make such offers in order to get them tried?

A. I did not have horses nor money to hire them. It would seem that it was pretty near necessary, to say the least, to offer these inducements, at the same time having the satisfaction of knowing

that the trials would be made practically when they were made; in fact, it was almost a fight to get a farmer to take a machine and give it a trial, even upon those conditions.

Q. 17. Did you have any other way of trying your machine or getting them tried or not?

A. I did not.

Q. 18. State all the dates relating to your invention, as near as you can, so far as you can recollect them, without reference to
290 the papers referred to or offered in evidence above.

A. I can state clearly from my recollection that the model I made first I made in the winter of 1862 and 1863. I remember that from the birth of my youngest child. She was born at the time I was working on the machine I made over from an old one in 1862. The following winter I made the first model spoken of. In that winter or spring following I made the machines spoken of with Porter & Bro. I know that in the winter of 1863 and 1864 I made an arrangement with Mr. Cleveland for making other machines. In the winter of 1864 and 1865 I made another arrangement with Porter & Bro. for making over the old machines. I made the second model, which was the first one I sent to the Patent Office, before the holidays of the winter of 1863 and 1864. I recollect that my brother and I made it at Coldwater, Michigan. I remember distinctly that when I got that model done I sent it to the Patent
291 Office, through Munn & Co. I remember that during that winter, not long after I sent this model on, Munn & Co. sent me the application papers prepared by them, including specifications, oath, and power of attorney, for my execution. I recollect very distinctly that I executed all these papers and returned them to Munn & Co. immediately after receiving them. I don't think they remained in my hand twenty-four hours. I signed them all at the same time when I made the oath. My recollection is that I executed those papers before John E. Clarkson, a justice of the peace at Waukegan, Ills. I recollect that when I sent my model to Munn & Co. I sent them $15, and when I returned the papers to them I sent them their fee, which they notified me was due at that time.

Q. 19. Do you recollect whether or not the model you sent to Munn & Co. as stated above contained the invention shown in the drawings of your patent No. 67041, as represented by this
292 model, "Defendants' Exhibit Model Graham Patent, 1867?"

A. It did.

Q. 20. Did or did not any delay ever occur in your applications or the prosecution of your proceedings in the Patent Office with your knowledge or through any of your acts, or did any such delays ever occur which you could have prevented?

Objected to — defendants' counsel as incompetent, the witness being entitled to state only facts. The court *be* the judge as to whether there was any delay on account of the laches of the witness.

A. There did not.

Q. 21. State fully all the facts connected with your application or proceedings in the Patent Office, so far as they relate to the obtaining of the patent in suit.

A. As I have already stated, I placed my model and fee in Munn & Co.'s hands for my first application in the winter of 1863 and 1864. I heard nothing from it, farther than an acknowledgement of
293 the receipt by them of the papers and funds, for some months. I finally wrote them enquiring what progress was being made. The substance of their reply was that my case was progressing in the ordinary way. I wrote them a number of times—can't say how many times nor what dates—in relation to it, and received in reply substantially the same encouragement. Finally, in the summer or fall of 1866, they advised me that my application had been acted upon—a portion of it being allowed and a portion rejected. That portion that I estimated valuable—that is, the finger-bar attachment to gearing carriage—had been rejected. They advised me to accept what was allowed, as, in their opinion, the references were good and I could not secure a claim on those parts rejected. They informed me that I could appeal, but advised me not to do so, but if I concluded to appeal they would conduct the appeal for a given
294 fee. In the fall of 1866 Mr. William B. Werden, who was then interested with me in the machine, went to New York and, through a friend — his, he made the acquaintance of Mr. E. S. Renwick. I had determined to get a new solicitor and instructed Mr. Werden to find one and lay the case before him personally. He laid the case before Mr. Renwick with the view to an appeal in the Patent Office; also saying to him that I was about to make an application for other improvements on the same machine. Renwick advised me, through Werden, to withdraw that portion that is comprised in the first and second claims of the patent now in suit, and embrace them in the application about to be made as the cheaper and better course for me to pursue. At the same time he expressed an opinion that I was clearly entitled to patent on the features under consideration. I got up a model that fall of 1866 or early in the winter following and sent it on to Mr. Renwick, with an order on Munn &
295 Co. for my application then in their hands. After a reasonable length of time, I can't say just how long, Mr. Renwick forwarded the application papers to — for execution. I executed them before John E. Clarkson, justice of the peace, and returned them to Renwick. I think I kept them a day or two first. On the 11th of February, 1868, the patent was issued. In the mean time the patent applied for through Munn & Co. was issued.

Defendants' counsel objects to all that part of the last answer which relates to letters written and received by and between the witness and third parties and conversations had not in the presence of witness as incompetent, immaterial, & heresay; and defendants' counsel will move at the hearing of this cause to strike from the record all the last answer, except such relevant part as may
296 appear from the answer to be founded on the actual knowledge of the witness.

Q. 22. Did you instruct Mr. Renwick to withdraw from application filed by Munn & Co. that part of the invention which had been rejected which you have referred to,— as to have the same embodied in your new application or not?

Defendants' counsel objects as incompetent and immaterial.

A. I did.

Q. 23. When did you first know or learn that your first application was not filed in the Patent Office until December, 1865?

A. Since this suit was brought.

Q. 24. Did you or did you not ever know before the commencement of this suit that it was not filed immediately after you returned the executed papers to Munn & Co.?

Objected to by defendants' counsel as immaterial.

A. I did not.

Q. 25. Do you now or did you ever know any reason why it was not filed in the Patent Office immediately after you returned the papers to Munn & Co. early in 1864?

297 Objected to by defendants' counsel as immaterial, it being the duty of the witness to have pressed his application at that time or to have known why it was not pressed by his agents for a year or more after it was placed in their hands.

A. I did not and never did.

Q. 26. Did you or did you not always suppose that it was promptly filed in the Patent Office early in 1864 until you learned the contrary after the commencement of this suit?

Defendants' counsel objects to the suppositions and surmises of the witness upon the subject-matter last inquired of as incompetent and irrelevant.

A. I did so suppose; if I had had the remotest idea that such was not the case I should have changed solicitors long before I did, as I was extremely desirous all of the time to secure my patent for the reasons that I have before stated.

298 Q. 27. Did you or did you not pay Munn & Co. all their fees and money for the Patent Office fees when they asked for the same?

(Objected to.)

A. I did; I sent the first Government fee of fifteen dollars with the model, and when I returned the papers to them, after execution, I sent them their fee of twenty-five dollars—all they asked—all in accordance with their instructions and orders.

Q. 28. Did they ever ask you for any money, for any purpose connected with the application, after early in 1864?

(Objected to.)

A. They did not; the next money I was called upon to furnish in connection with that application was for the Government's final fee of $20 on the issuing of the patent.

Q. 29. Were or were not your machines offered for sale before the summer of 1865? State fully all the facts.

A. They were not really offered for sale, except upon the terms that I have already mentioned; it was absolutely necessary to offer to sell the machines after trial, if they proved a success, upon the price agreed upon. The facts were, that if the machine
299 proved a failure I certainly shouldn't want them in the hands of other parties, as they would be an injury to me in the future and would serve me a good purpose to experiment with at another time if returned.

Q. 30. You have an interest in the result of this suit, have you not?

A. I have; it extends to whatever the patent earns either by infringements — on royalties for the manufacture of machines. I was under a financial pressure and I sold these patents to my brother for money to let me out. I needed that money to pay the judgment on the note which has been offered in evidence here. Those patents were my only resource at the time.

Cross-examination by Mr. OFFIELD, counsel for defendants:

X Q. 1. Where was that large stock farm which you traded for, in Iowa, in 1861?

A. The land was in Jones county, Iowa.

X Q. 2. Did you go to live there?

A. I did not.

300 X Q. 3. How long did you own that farm?

A. From May, 1861, until perhaps 1865, I think.

X Q. 4. Were you a healthy, able-bodied man from the fall of 1862 to the winter of 1867 and 1868?

A. I think I might be called such, though I think I had one or two fits of sickness in the time—nothing very material.

X Q. 5. Where were you living during the year 1862?

A. From the fall, perhaps October or November, of 1861 until either September or October of 1862, in a house on a farm in the town of Avon, Lake county, Ills., that I rented from Mr. John Carfield.

X Q. 6. Where did you move to when you left that farm in October, 1862?

A. To Waukegan, Ill.

X Q. 7. How long did you live there continuously?

A. From the fall of 1862 to the spring, I think; perhaps March or April of 1870.

X Q. 8. When did you begin to make over that Kirk-Marsh machine of 1862?

301 A. I think in May. It might have been the very latter part of April, 1862.

X Q. 9. Did you arrange that machine as a mower so that it it would operate in the grass field that year?

A. I did.

X Q. 10. How much grass did it cut and who operated it?

A. It would be difficult for me to give the number of acres, but it cut mainly through the haying season. I operated it myself.

X Q. 11. You were a practical farmer in 1862 and knew how to operate reapers and mowers at that date, did you not?

A. I couldn't say that I was a practical farmer. I was raised on a farm and had spent the years 1859, 1860, and 1861 on a small farm and was probably as well qualified for handling a mowing machine in 1862 as the average ordinary farmer.

X Q. 12. What was the extent of your family depending on you for support between the years 1862 and 1868?

A. A wife and three children.

X Q. 13. Did you cut all John Carfield's grass in the sum-
302 mer of 1862, and also some of the grass of your neighbors, with that old reaper changed from a Kirk, Marsh & Smith?

A. I did not cut all of John Carfield's grass, as he had a machine of his own at that time. I cut some grass for him, and I cut some for other neighbors.

X Q. 14. What mechanism did you have in that rebuilt reaper of 1862 for allowing the cutter bar to ride over the ground and attaching it to the frame?

A. (Witness refers to Defendants' Exhibit "Model Graham Patent, 1867," and states:) I had a frame similar to the one in this model with a block bolted to the under side of the sickle-bar corner, to which I bolted a couple of wrought-iron straps with eyes at their outer ends with corresponding straps bolted to the inner end of the finger bar. Through these straps I inserted a bolt, making a hinge joint between the corner of the frame and the inner end of the finger bar. I had a pole or tongue loosely pivoted to the
303 front of the frame, and I got my vibration upward and downward for the heel of the finger bar to allow it to conform to the inequalities of the surface by means of the main frame vibrating around its gear center or main axle. There were no appliances for moving the finger bar except as raised with the frame of the machine through the caster-wheel lever.

X Q. 15. That machine did good work, didn't it?

A. Yes, sir; very fair. In rough bottom it had a tendency to run into obstructions rather than run over them.

X Q. 16. What became of it?

A. I traded it the next spring, I think, to a Dutchman for a watch and a small amount of money, if I recollect right.

X Q. 17. When did you begin work on another mower in 1863?

A. I began getting up patterns for the 1863 machines the latter part of January or fore part of February, 1863.

X Q. 18. Had you a contract with Porter & Bro. then to build your mowers?

304 A. I think we had a memorandum of agreement between us reciting our understanding, but not reduced to a formal contract.

X Q. 19. Had you any intention of taking out a patent in January, 1863, for the mower you intended to build?

A. I certainly had.

X Q. 20. Why did you wait until 1864 before moving in the matter?

A. I preferred to experiment to some extent to determine whether my ideas would be practical when put to the test.

X Q. 21. And you didn't intend to take out a patent until you found that the devices contemplated and embodied in your mower were a success?

A. Not until I found they were practical, unfortunately for me, perhaps. I had understood that they must be practical in order to secure a patent.

X Q. 22. And you- experience and use of the mowing machines as you built them in connection with Porter & Bro., before and during the summer of 1863, convinced you that you had a practical and successfull machine; is not that a fact?

305 A. It so convinced me, with certain alterations which those experiments suggested.

X Q. 23. The alterations which were necessary to make the machine work, according to your best ideas at that time, were such as would suggest themselves to any ordinary mechanic when seeing the machine work?

A. I could not say what those operations might have suggested to others, but they suggested the improvements that I embodied in my model in the fall of 1863.

X Q. 24. Well, as I understand you, the only difference or changes which you made between the machines built by you & Porter & Bro. & the model made by you and sent to Washington in 1864 was that you substituted a metal projection in the rear of the frame to receive the vibratable link instead of a wooden one, which destroyed itself by friction, and that you removed the forward end of the draught rod from the hub & lengthened it to connect with the frame; is that correct?

306 A. No, sir; it is not correct. I believe I haven't made that statement. As I stated in my direct examination, the main shoe of the finger bar in the 1863 machine or experiments was provided with two lugs or ears, cast upon its upper face, between which an intermediate piece that constituted a part of the draught rod was placed, with a pin or bolt passing through these ears and said intermediate piece of draught rod, which bolt was horizontal when the finger bar was on the ground and parallel to it. The draught rod, when folding the finger bar, turned at its forward end. I had another attachment in connection with this shoe that ran under the draft rod and pivoted to this piece that goes through the lugs and the rear end of the draught rod; said attachment called the "clear- V" in the patent. This clearer extended forward about equidistant with the front end of the frame and was provided with a boa-d that stood vertical on its edge when the machine was in operation.

307 X Q. 25. A machine built in accordance with the plans, specifications, and drawings of your July 23d, 1867, patent would be a practical working machine, would it not?

A. I should say it would.

X Q. 26. The joint and connection which you have described as connecting the draught rod with the shoe in the machines built by you and Porter & Bro. in the year 1863 allowed free tortional movement and was substantially a swivel joint, and your lugs and pin on the shoe as connected with the draught rod was designed for swivel purposes, was they not?

A. Those joints admitted of the movement, but I should consider them very crude compared with the joints that I put in their stead in my model of 1863 and 1864, especially in connection with the clearer V spoken of before, which to me at that time seemed to be a necessity.

X Q. 27. But these joints admitted of a free play of the finger bar over irregularities of surface and of its rising and falling at either end, did they not?

308 A. To a certain extent, but in very abrupt irregularities of the surface there was a confliction with other parts that the newer joint overcame.

X Q. 28. Do you wish the court to understand that these joints or the manner of attaching the draught rod to the shoe interfered at all with the success of that machine as built in 1863?

A. With the attachments connected with it in 1863, I understand very distinctly by that there was an interference very materially with its free action.

X Q. 29. What attachments do you refer to in the 1863 machine?

A. I refer to the attachments referred to in my answer to your question 24, called the clearer V in the patent of 1867, and used in the 1863 and 1864 machines.

X Q. 30. But still you kept this attachment in your machine of 1864, applied for a patent, and kept it in your application till the granting of the patent in 1867?

A. I did, and made the swivel joint, as shown in the "model Graham patent, 1867," to overcome that confliction, together with others, and make a more perfect mechanism of the whole.

309 X Q. 31. Have you now stated all the changes you made between the machines constructed in 1863 by you and Porter & Bro. & the machine shown and described in your patent of 1867?

A. No, sir; I have not. I in part stated one of the changes in my answer to your question No. 24, but did not complete it. When folding the finger bar this board which stood upon its edge, being a portion of the "clearer V," would turn over into the driving wheel, except that it was hinged to the member of the clearer V that ran near the ground, being pivoted at its rear end to the shoe and draft rod, but by the style of joint in the model of 1864 the folding of the bar did not change the position of the clearer V. I think I have now stated all the main differences.

X Q. 32. When did you first find out that you could leave off this clearer entirely?

A. I left it off the mowers in 1865, but continued it differently attached with my grain-cutting attachment for the same machines.

310 X Q. 33. Did you not ascertain by the use of your mowers in 1864 that this clearer could be dispensed with in the mower?

A. The mowers of 1864 contained that feature, and in 1865 I dispensed with it, according to my best recollection.

Adjourned to September 17th, 1879, at ten o'clock a. m.

SEPTEMBER 17TH, 1879—at ten o'clock a. m.

Parties met pursuant to adjournment.

Present: As before.

X Q. 34. Who worked for Porter & Bro. at the time you built the machines in 1863?

A. Mr. Ward, who testified here in this case, and Mr. Trumbull Kent and myself. Kent is in Waukegan and Benjamin F. Porter is there, too.

X Q. 35. How many mowers did you construct in 1863?

A. I think there were four of them completed; three of them taken out; one of them I took out into the town of Avon and ran it for a short time—was fooling with it for, perhaps, an hour or two; two of the others went onto the farm of Ichabod Bull, and the
311 other onto the farm of Mr. Dooley.

X Q. 36. What did you do with the one which you ran?

A. I can't be positive as to when I got the machine back to town. I left it in the meadow belonging to Henry Hart. I can't tell how long it stayed there, but it was brought back to the shop some time during that summer.

X Q. 37. At what time were these three mowers completed in 1863?

A. I think about the last of June or first of July I took the machine out, and I took it out as soon as it was completed.

X Q. 38. Were the other two completed at that time?

A. I am not positive; but they were nearly so.

X Q. 39. Did you have any other mowers besides those three in the process of completion?

A. We had; I think we begun ten or twelve and had the castings cut for them.

X Q. 40. Did you not set these ten or twelve machines up in 1863?

A. I think they were partially set up, but not completed.

312 X Q. 41. You would have sold any one of those 1863 machines if any person had offered you your price for them, wouldn't you?

A. It is a little difficult for me now to state what I would have done then at this distance of time from then. I certainly never had the disposition to sell a dead horse if I knew it or thought it was so.

X Q. 42. You built the machines to sell in 1863, didn't you?

A. We built the machines to sell if they proved successful. If not successful we did not expect or intend to sell them.

X Q. 43. You wouldn't have sold one of them and let the purchaser judge whether it was a success or not in 1863, would you?

A. I have stated before I am not prepared at this time to state on oath what I would have done sixteen years ago in a matter of that kind.

X Q. 44. Did you trade any one of the 1863 machines off to any person, and when I say you I mean you or either of the Porter Brothers?

A. We did not that I ever knew of.

313 X Q. 45. Who furnished the money to build those ten or twelve 1863 machines?

A. Porter & Bro.

X Q. 46. Did they pay you for your services while you were working on the machines in 1863?

A. They did pay me what I absolutely needed for current expenses of my family during the time, but not any fixed wages, if I remember rightly.

X Q. 47. You claimed in 1863 that the mowers were a success, did you not?

A. I did not.

X Q. 48. Where are the two parties whose names you have given as running the other two mowers in 1863?

A. Mr. Bull is deceased. Mr. Dooley is residing, I believe, on the farm where this experiment took place, in the town of Benton, Lake county, Ills.

X Q. 49. Do you know how much grass they cut with your mower in 1863?

A. I do not. Mr recollection is that Mr. Dooley had another machine. I couldn't tell anything about how much was cut. I know I was there the biggest part of the time trying to make the
314 machine work—either there with the machine or at the shop making such parts or pieces as in my judgment would overcome the difficulties from time to time, and on the road between the shop & the machine to apply them.

X Q. 50. How much grass did the machine on the Dooley farm cut in 1863?

A. As I have before stated, I couldn't begin to tell; would gladly, if I knew.

X Q. 51. Twenty-five or thirty acres?

A. I wouldn't undertake to approximate it; it is too long ago. My mind at the time was preoccupied with things of more importance to me than the acreage the machine got over.

X Q. 52. Was this mower worked on any other farm than Dooley's in 1863?

A. Not to my knowledge. I think I would be perfectly safe in saying no.

X Q. 53. Did you see the machine work on the Bull farm in 1863?

A. I did, I think, on two different times; think not more. They were trying to cut grass with it. Mr. Bull became impatient
315 and returned the machine and bought him another one.

X Q. 54. How much grass had he cut with that machine before he returned it?

A. I couldn't say, but I think but very little.

X Q. 55. What did you do during the winter of 1863 and 1864?

A. In the early part I made my model for the Patent Office for my first application, and I think I worked in a wagon shop for a few weeks in the latter part of December and in January. In the meantime I succeeded in making the arrangement with Mr. Cleveland, and, upon completing it, I commenced working again on the machines. I had to get up a new set of patterns during that winter and spring.

X Q. 56. You stated in your direct examination, did you not, that the reason why the 1863 machines were not satisfactory was because the outer end of the vibratable link passed through and worked in a wooden block or extension of the frame, and that the action and play of the vibratable link wore out or enlarged the hole
316 through which it passed?

A. Not exactly. I stated that what is in the drawings marked K in the patent of July 23d, 1867, was inserted into a wooden hole or bearing, and the vibration of the machine when in motion wore out or enlarged that hole.

X Q. 57. In how many machines did the wearing out of this hole take place?

A. In the machine on the Dooley farm. My recollection is that that was the only one of the number that ran any time at all except a few hours.

X Q. 58. A metal lining to that hole would have remedied that difficulty, would it not?

A. I think I lined it with a boot leg once; never tried metal in that hole; but the year following I put a cast-iron box on the corner of the frame and inserted this member of the joint in that.

X Q. 59. Do you deny that your mower, as operated on the Dooley farm in 1863, was a practical working machine?

A. I do, most emphatically.

317 X Q. 60. You didn't find it out until some time after this suit was begun, did you?

A. I found it out very early in the harvest of 1863, on Mr. Dooley's farm, and never was known to have denied that it was a failure.

X Q. 61. Did Mr. Cleveland, with whom you went into partnership in 1864, know these 1863 machines?

A. He did by sight; that is all. He knew nothing about them practically; he knew nothing about them at all until the winter of 1863 and 1864.

X Q. 62. How many machines did you build with Cleveland in 1864 before harvest?

A. I think about a dozen. I am not positive as to the exact number.

X Q. 63. These machines built by you and Cleveland were all built according to the plans, specifications, and drawings shown in your July 23d, 1867, patent, were they not?

A. Substantially so.

X Q. 64. They were practical working machines and did good work in the grass field in 1864, did they not?

318 A. I have stated that in light grass they did tolerably well while they staid together, but in heavy grass not so.

X Q. 65. How many of those mowers did you put out which were run in the grass field of 1864?

A. There is one that I spoke of that was put on the farm of George Stearns and the one that Mr. Ward took out at Cleveland's solicitation, after having made some changes in it; these are all that I remember. The facts were it was about an impossibility to get a farmer to take one of them out; they were considered by the farming community unworthy of an attempt; that was my experience with them at the time.

X Q. 66. How many machines did you and Cleveland build for the harvest of 1864?

A. I think, some ten or a dozen. I see by the copy of the contract that we were to undertake fifteen, and I think we did make about a dozen.

X Q. 67. Did either you or Cleveland trade off or dispose of any one of these mowers in any way during the year 1864?

319 A. Not that I have any knowledge of.

X Q. 68. Who worked on these 1864 machines in building them?

A. Mr. Fenner, Ward, a man named Schwarm—think A. Schwarm—and myself. I do not known where Schwarm is; he lived at that time at Waukegan.

X Q. 69. Did you and Cleveland offer these machines publicly for sale?

A. I think we offered these machines in the same manner we did those of the year before. That is the only way I ever offered any of them, I know.

X Q. 70. What price did you put on the 1864 mowers?

A. I couldn't tell; it was a sort of running scale—anything that a man would take one at and run his chances, almost.

X Q. 71. Who furnished the money to build the 1864 mowers?

A. Mr. Cleveland.

X Q. 72. And the only two mowers you built in 1864 which you know anything about being run in a harvest field were the two you have spoken about; is that so?

320 A. That is all I can place in my recollection; I think if there had been others I should have recollected of it; the thing went to the ground verly early in 1864. The failure of 1863 and the failing up of the first machine that went out in 1864 was not calculated to inspire the farming community with sufficient amount of confidence to try them to any great extent. As a matter of course, our operations were confined to a very limited territory, and the community was about as conversant with the results of our operations as we were ourselves.

X Q. 73. Then your statement as to those 1864 machines briefly in this: that you built in 1864 ten or twelve practical working mowing machines, according to the plans and specifications of your pat-

ent of July 23d, 1867, but that you did not sell or part with but two of those mowers, because the farming community didn't have confidence enough in them to buy them; isn't that it?

A. No, sir; it is not it. I haven't stated that they were
321 practical mowing machines; had they been so we should have been able, perhaps, to have got out more of them.

X Q. 74. You have stated two or three times during the course of this examination that a mower built in accordance with the plans and specifications of your July 23d, 1867, patent would be a practical working mower. You have stated once or twice that these ten or twelve mowers which you and Cleveland built for the harvest of 1864 were built in accordance with the plans, specifications, and drawings of that patent. Now, I desire you to state to the court why you now swear that the entire twelve machines which you built in 1864 were every one of them impractical and unsuccessful machines?

A. I have not so sworn. I have sworn to the two that were put to a practical test, and have meant to be understood that I was testifying as to those machines.

X Q. 75. Will you state now whether those ten or twelve mowers built by you and Cleveland in 1864 were practical, successfully working mowing machines?

322 A. I could not state, beyond the two spoken of, whether they were or were not. I never saw them in operation.

X Q. 76. You have sworn as to the two 1864 mowers, which you personally knew to have been run in the field, that they were practical and successful mowers, except in cutting heavy or lodged grass, have you not?

A. I believe that I stated as to one of those two that it was run by Mr. Ward, and all that I know about it was his relation to me. The other one I did see run in the grass, and I have before stated that our cog gears broke up badly in that machine, and also that this member marked K in the 1867 patent, when closely confined in an iron box to overcome the counter-vibration of the pitman and sickle, broke at its shoulder at the box.

X Q. 277. Then, the only obstacle which you now remember that prevented the practical and successful working of that one particular 1864 mower was on account of some defective material which
323 you used in that particular mower for the cog wheels and box, was it?

A. I should say not. The material was the same as the year previous and of subsequent years, and the member of the swivel joint designated K was made larger at the shoulder and stronger than formerly when placed in a wooden bearing. The breaking of the gears might have been occasioned by improper setting.

X Q. 78. Then there was nothing in the formation of the box or swivel joint or cog wheels in that 1864 machine, either as to shape or material used, which prevented a practical and successful working of this particular machine or any of the others. Is that the meaning of your last answer?

A. It is not. I have stated that the breakage of this member of the swivel joint was a preventative to successful operation in that particular machine, and it would be presumable that the others would follow suit.

X Q. 79. You had a much weaker swivel and rear connection in the 1863 than in the 1864 machines, hadn't you?

324 A. I have stated that the member K of that swivel joint was made somewhat larger and stronger at its shoulder where it entered the iron box than the same member was in the 1863 machines, and when confined sufficiently close in its bearing to sufficiently overcome the counter-vibration of the main frame to the pitman and sickle that it broke off at the inside of the shoulder where it entered the box at the point of fulcrum. The reason why this was made larger in 1864 than in 1863 was that it was made straight in its bearing in 1863, and in 1864 it was made tapering, larger at the shoulder and smaller at its farther end, at the other end of the box, having broken one or two of them, more or less, in the machine on the Dooley form when confining them more closely by inserting the boot-leg, as I have mentioned, in the bearing.

X Q. 80. Do you not know now and did you not well know in 1864 that the reason why the member K broke in the 1864

325 particular mower was because of defective material or because it was not made of sufficient strength, according to the specifications and drawings of your 1867 patent, and would it not have been the simplest thing known to a mechanic to make that member K large enough or strong enough if it was made of defective material.

A. I never knew what broke that joint. I have given the subject a good deal of thought and never could determine where the line of strain was that broke it.

X Q. 81. Did Cleveland or you sell or dispose of the remainder of those ten or twelve 1864 mowers?

A. Mr. Cleveland, in the winter of 1866–'7, sold the entire lot, the two that had been tried included, to a man named Hubbard. Hubbard overhauled them and, I think, incorporated some of his own ideas into them and disposed of them. I don't exactly know how. He sent them away from Waukegan to some other point; I think to Wisconsin.

326 X Q. 82. When did you build the next mowers after 1864?

A. In the winter of 1864–'5 and the spring following I took hold of the old experimental machines of 1863 and overhauled and rebuilt four of them with Porter & Bro.

X Q. 83. Did Mr. Cleveland pay you for your labor and services performed during the year 1864?

A. He did.

X Q. 84. How many machines did you and Porter & Bro. build in 1865?

A. We built over the four spoken of; that is all I can remember.

X Q. 85. Did you build these in accordance with the plans, specifications, and drawings of your 1867 patent?

A. I made some changes from the machine of 1864. If I recollect right I placed the box upon the upper corner of the main frame to receive the member K and made it somewhat larger and stronger at the joint of the previous breakage. I still experienced the break as to that joint. I then made that joint as it is now shown in the full-sized machine marked "Graham mower, 1863;" otherwise
327 the machines were the same substantially as described in the said plans, specifications, and drawings, with the exception of the clearer V.

X Q. 86. These machines built by you and Cleveland in 1864 were exhibited publicly or placed where the public could see them or have access to them, and you and Cleveland offered them for sale and would have sold them at any time if you could have got your price, would you not?

A. These machines when built were run out into the yard back of the shop, and some of the last ones were, perhaps, left in the shop. I presume they were not secreted. They were where people could see them who came to our place. We had no public exhibition or sale-room for them. As to the sales, I presume we would have been glad to sell the machines if we could have got our price for them, and if they had been of a kind to recommend future sales of our kind of goods. We offered the machines for sale on trial the same as we had in 1863, to take them on trial, and if they were a
327½ success they could keep them for a given price; if not the machines were our property. I felt perfectly safe in this course from the fact that I had the winter before sent on my application for a patent, and from the best information I could get that secured me.

X Q. 87. If a farmer had walked into your shop at any time during the year of 1864 and offered you a reasonable sum of money for one of your machines would you have then sold and delivered it to him, allowing him to be the judge of the character of the machine?

A. I should dislike very much to state on my oath what I would or would not have done on such a hypothecated case as long ago as that was.

X Q. 88. Have you any objection to Munn & Co. or E. S. Renwick stating all they know in regard to your application for these two patents or placing upon the record all the correspondence which they may have from you in relation to the same and testifying as to what they know of these two patents and the various documents relating to your application?

328 A. I am not prepared to answer that question.

X Q. 89. What is the reason why you are not prepared to answer it? It cannot be that you have not stated all the facts in regard to your correspondence and conversation with Munn & Co. and Mr. Renwick, can it?

A. My reason is that I should prefer to give a question of that kind a little thought before making answer, not that I have not stated truthfully every thing about it, so far as I can remember.

X Q. 90. Will you give your consent to Messrs. Munn & Co. and Mr. Renwick stating upon this record all they may know in regard to your application for those two patents, so far as their knowledge relates to the direct subject-matter which you have testified to in this examination?

A. I am not prepared to answer.

X Q. 91. How long will it take you to make the necessary preparation?

A. I think not a great while; probably I should like to consider the matter awhile.

(Recess for dinner.)

329 X Q. 92. Can you now answer the last question?

A. I have no objection to Munn & Co. and Mr. Renwick placing all of my letters in relation to my application for patents upon the record and their statements as to the facts, upon such conditions as counsel for complainant may name. My hesitation in answering those questions at the time they were asked was because I understand and have for some time understood that the parties named in those questions we retained as experts by the defendants, and that they have, to some extent, assisted in working up the defense in this suit.

Counsel for complainant states that he has several recent letters from Munn & Co. & E. S. Renwick stating various facts and dates in relation to Mr. Graham's application and proceedings in the Patent Office, all of which he is willing and here offers to produce and offer in evidence if counsel for the defendants will consent to their introduction and to their being made a part of this record, and asks defendants' counsel for an answer to this offer.

330 Defendants' counsel states that he knows nothing about those letters last referred to, either as to their contents or genuineness, and that experts' statements of the parties referred to, without opportunity to call their attention to the state of facts desired to be *a*-quired of and without a personal examination under oath as to such questions as he may desire to have answered, he would not feel at liberty to admit as evidence the letters referred to or bind his clients by any such irregular and unsatisfactory mode of proceeding.

Counsel for complainant also states that he is willing that the depositions of Munn & Co. and E. S. Renwick, or either of them, may be taken as to all the matters referred to above on condition that the same be taken without delay, and that the witnesses be brought to Chicago, so that their depositions may be taken without expense to the complainant.

Counsel for defendants replies for the reason that he does not desire seemingly upon the record by his silence to accept
331 the offer as last given, because, as he now understands it, it would be practically impossible to obtain the attendance of Messrs. Munn & Co. and E. S. Renwick as witnesses in Chicago on account of the complete occupation of the time of those gentlemen,

and as he understands it would be a matter of considerable difficulty to procure their attendance as witnesses in their resident city, New York; and defendants' counsel states that he does not understand that Mr. Renwick has ever had any association with the defendants except as an expert witness upon matters entirely foreign to any issues involved in this case, and that he does not understand that Messrs. Munn & Co. have represented or acted for the defendants in any capacity whatever.

X Q. 93. When did you drop Munn & Co. and employ Mr. Renwick?

A. My recollection is that it was in the winter of 1865–'6; am not positive as to the month; it may have been in January.

X Q. 94. Did you withdraw entirely the authority of Munn & Co.?

A. It was my intention so to do.

332 X Q. 95. When did you make the model which you sent to Washington for the February 11, 1868, patent?

A. I think that model was made in the fall of 1866, or the winter following.

X Q. 96. When did you send that model to Washington?

A. I sent it to Mr. Renwick about the time of its completion.

X Q. 97. Do you say that Mr. Renwick advised you to withdraw the rejected claims from your 1867 patent, and to claim them over again in another application, and that the office would then allow them?

A. I do, and the proceedings were carried out, as I understand it, in accordance with that advice—I mean in respect to the two claims in controversy.

X Q. 98. As I understand you, but two of the machines made over by you and Porter & Bro. in 1865 were got off your hands. If that is so, what became of the other two?

A. My statement was that Elli Wilder, John Carfield, Mr. Shauber, and Mr. Merchant each took one of these machines in

333 1865, and they paid for them at the end of the season.

X Q. 99. And you testify that those machines were a success because they didn't bring them back and paid something for them, do you?

A. I testified that those four machines went through that season's work and several more seasons' works, to my certain knowledge, successfully.

X Q. 100. And that these were the same machines or some of them that you built in 1863, changed or altered over to some *some* extent?

A. There were; we used such parts of the 1863 machines as were suitable, and supplied the balance of the parts new.

X Q. 101. You have stated that the "Graham mower, 1863," introduced in evidence, was originally built in 1863. What difference is there between that as it now stands and when it was originally constructed, in 1863?

A. The difference was that I dispensed with the caster wheel in 1865, changed the connection of the draught rod from the main axle

to the front end of the frame, dispensed entirely with the
334 clearer V in the mower, made an entirely different joint at the rear end of the draught rod and its connection to the front of the shoe, by which the finger bar folded, without turning the draught rod at its forward end. I also changed the swivel joint marked M, in the patent of 1868, at the rear left-hand corner of the main frame. I also dispensed with the lever and its attachments, chain or cord, and the upright angle iron at the main shoe.

X Q. 102. But otherwise that "Graham mower, 1863," is the same in construction and material as originally built in 1863?

A. No, sir; the finger bar in 1863 was of wood. The shoes on this exhibit, "Graham mower, 1863," were made, I think, in 1867.

X Q. 103. Then this "Graham mower, 1863," was changed again in 1867?

A. So far as to extend the boss or hub on the front of the shoe upward so as to form a bearing for a friction roller for an outside rim to run upon. Another projection at the rear of this shoe appears in the present shoe. The shoe is substantially the same as the 1865 shoe.

335 X Q. 104. Then this "Graham mower, 1863," exhibit is the same as when originally built, except that the caster wheel, the lifting lever and device, and the clearer have been removed—an iron finger beam substituted for the wood. The swivel joint at the outer end of the vibratable link is changed in position and a different swivel or tersional joint constructed and arranged on and between the shoe in its forward connection, the connection of the draught rod being changed from the hub to the front end of the machine, is it?

A. No, sir; not entirely. The swivel joint M in the patent of 1868 is not changed particularly in location, but is differently constructed, and the main frame and driving wheels in the reconstructed machine are considerably narrower, and the gearing as arranged in 1863 is also changed. These are all the changes that I can remember.

X Q. 105. Then, as a matter of fact, there is nothing in that "Graham mower, 1863," of the material of which it was originally built?

336 A. The driving wheels, the main frame reduced in width, the shafting, all of the gears except one wheel, the vibratable link with one-half of the hinge joint, & the pole, are of the original machine. Except in the frame the forward timber was put in new, and in the 1863 construction the vibratable link was provided with a cast-iron journal, bolted upon the upper end of the wooden piece forming that portion of the swivel joint referred to as M.

X Q. 106. The reason why the finger beam of the 1864 machine did not work well, as you say, in heavy grass, was because of its thickness and clumsiness, being made of wood?

A. The 1864 machine was made with an iron finger beam.

X Q. 107. Well, did the 1863 machine cut satisfactorily in heavy grass?

A. It cut tolerably well in grass as long as we could keep the machine together. The machines of 1863 and 1864 were frailly constructed, owing in part to the want of practical experience, & in part to want of facilities for doing that kind of work.

337 X Q. 108. Did you lose any of your property between 1861 and 1868?.

A. I lost what I had to lose.

X Q. 109. When?

A. I lost my Iowa land in 1867.

X Q. 110. Did you apply for any other patents than the 1867 and 1868 mower patents between 1862 and 1868?

A. Some time in the winter of 1865–'6 there was an application made in my name for a patent other than for a mower or harvester. The patent never was granted. I think in 1867 or 1868 I applied for two different patents on mowers, which were granted. Those patents were issued, one April 7th, 1868, and the other March 9th, 1869.

X Q. 111. When was the application made on this April 7th, 1868, patent?

A. I think in the spring or summer of 1867.

X Q. 112. Porter & Bro. were interested in the application pending in 1863 and 1865 for the July 23, 1867, patent; were they not to have an interest in the patent?

A. I couldn't say as to that; perhaps so; but my recollection is that they were to have the exclusive right to manufacture

338 under the patent and a certain percentage of the profits. If they had any rights in the patent or invention they were surrendered to me at the closing up of our relations in connection with the machine in 1863, in the fall or summer.

X Q. 113. They were men of considerable means in 1863 and 1865, were they not?

A. They had considerable property; as to their ready money I can't say.

X Q. 114. Mr. Cleveland in 1864 was to have an interest in your patent, was he not; and he was a man of considerable means?

A. He was to have an interest, and I suppose he was a man of considerable means.

X Q. 115. You are not on very good terms with W. B. and Cyrus A. Werden, your joint assignees of the 1867 patent, are you?

A. I am not.

X Q. 116. When did you have a substantial disagreement and separation of interest from them?

A. I think our final separation was the latter part of August, 1869.

X Q. 117. Isn't it a fact that your principal object and aim

339 in taking out this Feb. 11, 1868, patent was to beat the Werdens out of the claims and inventions which you had shown in the 1867 patent and obtain those claims personally to yourself, although you were in duty and honor bound by your contract with them to convey to them whatever invention there was in the 1868 patent, as far as that patent relates to the first and second claims?

Wasn't that the real object of the 1868 patent and the real reason why you didn't follow the advice of Messrs. Munn & Co. and appeal?

A. It was not; and if they intimate such an intention I brand it as a falsehood. It was not in any sense my object in changing solicitors or my object in changing my course from an appeal to the course finally pursued, and up to the time that we received advice from Mr. Renwick I was not aware that it was possible for us to proceed in any way except by appeal.

X Q. 118. If the 1867 patent had been granted as origi-
340 nally applied for, the Werdens would have had an interest in that patent embodying the alleged inventions of the first and second claims, wouldn't they?

A. As I understand it, by the terms of the contract between myself and them they would have had up to August of 1867.

X Q. 119. Why was not the 1868 patent issued to you and the Werdens jointly as well as the 1867 patent?

A. The contract by which they had rights provided that for the year 1867 and each and every year thereafter during its continuance they should manufacture at least one hundred machines. They did not carry out this contract, and refused to carry it out.

X Q. 120. And that is the reason you didn't make your application for the 1868 patent until Feb. 11, 1867, and that you did not then assign to the Werdens an interest in that patent, isn't it?

A. No, sir; it is not. The application for the 1868 patent was placed by Mr. Werden personally, I think, in the hands of Mr. Renwick in the fall of 1866 or early winter following, and before
341 there had been any determination on their part as to the operations of 1867, so far as I knew. Their refusal to build the 100 machines is the reason why I didn't assign them an interest in the patent, and they never asked me for an assignment. The subject was never mentioned between us. They have never to this day asked me for an assignment.

X Q. 121. Which patent have you granted license under to the Wayne Agricultural Company of Richmond, Ind.?

A. Hugh Graham has licensed them under the Feb. 11, 1868, patent. I think he included also one feature of a later patent—the April 7, 1868, patent; that license was granted, I think, in Nov,, 1878.

X Q. 122. What is the license fee?

A. I had rather not answer that, in the absence of the papers.

X Q. 123. What machines had you seen in use where the finger bar was raised or lowered or rocked prior to your building those mowers in 1863, 1864, and 1865?

A. The McCormick machine, the Manny (two, I think), the Kirk Marsh machine that I have spoken of, the Kirby. Those I
342 saw—the Buckeye in 1863 or 1874; I think the Champion about the same time. They neither had a tilting finger bar; both had two wheels & a flexible bar. There may have been others that I don't call to mind now.

X Q. 124. The Werdens, who were interested in your patent in 1865, 1866, and 1867, were men of considerable means, were they not?

A. I couldn't state what their financial strength was. They had houses & lots where they lived, and William B. had his business & store.

ALVARO B. GRAHAM.

Counsel for complainant here offers in evidence a certified copy of the assignment from Alvaro B. Graham to himself and William B. and Cyrus A. Werden, dated November 25, 1865, recorded in U. S. Patent Office on the 5th day of December, 1865, in Liber Z 1, on page 403, and the same is marked "Graham Exhibit D."

Defendants' counsel objects to its introduction.

343 UNITED STATES OF AMERICA, } ss:
Northern District of Illinois, }

I, Frederick C. Hale, a notary public within and for the county of Cook and State of Illinois, residing at Chicago, in said State and district, do hereby certify that the foregoing depositions of William H. Lotz, Eli Wilder, Fenner W. Ward, J. Brown Porter, and Alvaro B. Graham were taken by and before me, by agreement of parties, on the 9th, 10th, 11th, 12th, 15th, 16th, and 17th days of September, 1879, at the office of Messrs. Banning & Banning, in Chicago; that each of the said witnesses was by me duly sworn to testify the truth, the whole truth, and nothing but the truth in said cause, and his deposition was by me reduced to writing by questions and answers and read over to the witness and subscribed by him as and for his deposition in said cause in my presence and in the presence of counsel for the respective parties, as appears noted in the foregoing manuscript pages.

I further certify that the parties, complainant and defend-
344 ants, were represented at the taking of the said depositions—the complainant by Messrs. Banning and Banning and the defendants by Charles K. Offield, Esq., of Offield and Towle.

In testimony whereof I have hereunto set my hand and official seal this 18th day of September, A. D. 1879.

[SEAL.] FREDERICK C. HALE,
Notary Public.

Fees for taking foregoing depositions paid by Messrs. Banning & Banning, complainant's counsel.

FRED. C. HALE, *N. P.*

UNITED STATES OF AMERICA,
Northern District of Illinois, } ss:

In the Circuit Court thereof. In Equity.

HUGH GRAHAM
vs.
CYRUS H. McCORMICK, LEANDER J. McCORMICK, and ROBERT H. McCORMICK. } No. 14750.

At Chicago, in said district, on the 21st day of October, 1879, before me, Frederick C. Hale, a notary public in and for
345 Cook county, Illinois, at the office of Banning & Banning, 147 Randolph street, Chicago—present, Ephraim Banning and Thomas A. Banning, Esqs., counsel for the complainant, and C. K. Offied, Esq., of counsel for the defendants—and thereupon the following proceedings were had:

ALVARO B. GRAHAM, a witness recalled, sworn, and examined on the part of the complainant, deposed and testified as follows:

Direct examination by EPHRIAM BANNING, Esq.:

Defendants' counsel objects to the examination of this witness for the reason that the complainant has closed this case upon the record, and that no further time has been given *them* by the court for the taking of further testimony, *their* time having long since expired, and for the reason that no motion is pending nor has any been made for an extension of plaintiff's time for the further taking of testimony; and defendants' counsel here gives notice that he will
346 move to strike any testimony which this witness may now give from the files either before or at the hearing of the cause.

In answer to this objection and notice counsel for complainant states that the depositions of David J. Powers, William R. Baker, William J. Hanna, and Merritt Green having all been taken on the part of the defense after the time for closing their proofs had expired, a cross-motion will be made to suppress all of said depositions at the hearing of this cause if counsel for defendants then insists upon their objection and notice above stated.

Q. 1. You have already been examined as a witness in this case, have you not?

A. I have.

Q. 2. Look at these parts of mowing machines now before you and state what they are, where they came from, and what you know about them.

Objected to by def'ts' counsel as incompetent & irrelevant.

A. They are parts of experimental machines made by my-
347 self and Porter & Bro., of Waukegan, Ills., in the year 1864. They came from the farm of Richard W. Dooley, Lake county, Ills., about the 24th or 25th of August, 1879. They were brought from there by me. The one marked "Complainant's Exhibit Graham's

Shoe, 1863," is the first shoe that I ever attempted to make, and was used in the machine spoken of in my former testimony on Mr. Dooley's farm, in 1863. All the shoes were made that way that year. The one marked "Complainant's Exhibit Porter's Shoe, 1864," is a shoe made by Porter & Bro. in 1864 and used in the machine furnished to Mr. Dooley in that year in place of the former one of 1863.

Counsel for complainant offers said two shoes in evidence, and the same are marked, respectively, "Complainant's Exhibit Graham's Shoe, 1863," and "Complainant's Exhibit Porter's Shoe, 1864."

Q. 3. State how you came to get these two shoes from Mr. Dooley and what you got them for.

A. I had seen these shoes at Mr. Dooley's place and counsel
348 for complainant advised me to go and get them, as they might at some time be beneficial to the complainant in this case, and I got them for the purpose of preserving them.

Q. 4. Did you at the same time or any other time get any other parts of a mowing machine from Mr. Dooley, or are these all that you got?

A. These are all that I got.

Q. 5. Did or did not Porter & Bro. have the improvement which you made in the fall of 1863 in the connection of the draught rod to the shoe, as shown in your 1867 patent, in any of the machines in which they were interested between the time you quit or closed your arrangement with them in 1863 and the winter of 1864–'5 or spring following, when some of their old machines were reconstructed, as stated in your other deposition?

A. They did not, to my knowledge. Porter & Bro. & myself were entirely separate in relation to this matter from the fall of 1863 to the winter of 1864–'5. I have no knowledge that they ever
349 had the improvement in the connection of the draught rod referred to until some time in the winter of 1864–'5, when we made the new arrangement for reconstructing the 1863 machines.

Q. 6. Then if Porter & Bro. sold any machines before the winter of 1864–'5 did they contain the swivel-joint connection of the draught rod in the shoe shown in your 1867 patent or the connections shown in the two shoes offered in evidence above?

A. I should say they did not contain the joint of the 1867 patent, but were the same as the two exhibits here.

Q. 7. What is the hole through the small piece hinged to the shoe for?

A. It was for splicing that piece to the rear end of the draught rod to permit the finger bar to be dropped forward at its upper end when folding or folded for transportation, as the draught rod turned with the shoe when folding. The front end of the draught rod being attached to the main axle, in the absence of this splice or joint in the draught rod, the finger bar when folded would
350 be at right angle with the draught rod.

Q. Did you or did you not, in 1863 and 1864, know personally of Porter & Bro. or George Cleveland selling any of your machines?

A. I did not, except as I have stated in my former testimony. I did not know of their receiving any money for the machines at that time.

Q. Did you ever know of Hansen Minskey's getting one of those machines in 1864 or at any other time or not?

Objected to by def'ts' counsel as irrelevant and immaterial.

A. I did not. The first I ever knew of his having one of those machines was when he testified in this case, but I have an indistinct idea of hearing that he had one while I was in business at Waukegan, but I know that he never got one while I and Porter & Bro. were acting together.

Q. 10. State why you did not refer to him and his machine in your other deposition.

A. For the reason that, never having sold or had anything to do with Mr. Minskey in relation to a machine, I did not
351 know that he ever had one of them. I do not know where his farm is and never did.

Q. 11. In all cases, so far as you know, where your machines were taken out in any way for trial or otherwise were or were not the parties informed that you had applied or intended to apply for a patent for your improvements?

A. So far as I know and to the best of my opinion they were. In fact, it was generally understood by my acquaintances, & I think by the majority of the people of Waukegan, that I was seeking a patent for my machine.

Q. 12. Did you inform the public generally and all persons interested in the machines, particularly so far as you had any talks in reference to the machines in 1863 and 1864, that you intended having your improvements patented or not?

A. I did. It was quite common talk, for that matter.

Q. 13. Did you or did you not give all persons with whom you had anything to do personally in regard to the machines
352 notice that you were thus seeking a patent in the years mentioned?

A. I did, if telling them the fact is notice.

Q. 14. State what conversation occurred between you and George K. Stearns when you were at his place last August in reference to the machine he has testified about in this case.

A. I was coming through Mr. Stearns' neighborhood and called on him and had some talk with him in relation to the machine he had got from Cleveland. He stated to me he could not remember when he got it. He knew it was some time during the war. He remembered that the machine was good for nothing & he had returned it. He said something about having paid Mr. Cleveland some money on the machine and that Mr. Cleveland paid it back on the return of the machine after trial. He said something—I can't recollect distinctly his language—to the effect that Mr. Cleveland retained some small portion of the money.

Q. 15. Was anything said in reference to the probability of his being called as a witness in this case or in reference to what

353 you desired him to state to the defendants in case they should make inquiries of him concerning the matter? If so, state what you said.

A. I said to Mr. Stearns that it was possible the defendants in this case might call on him, and I would like to have him say to them what he had said to me about the machine spoken of. My object in this was not to secrete evidence, but was to avoid expense and delay, being perfectly willing that all the facts in relation to this matter should fully appear, and to that end I had selected three parties in good standing, either one of whose knowledge of the facts and history of these transactions of the years 1863, 1864, and 1865 was more extensive than that of any one farmer having knowledge of these facts. Those persons by me selected were Mr. Porter, Mr. Ward, and Mr. Wilder.

Q. 16. What did Mr. Stearns tell you about the machine which you asked him to repeat to the defendants, as stated above?

A. The simple fact that he didn't remember when he got
354 it and that it was a failure and that he returned it in accordance with the agreement on which he took it out to try.

Q. 17. Did you ask him to tell them anything untrue or to conceal anything about the matter?

Objected to by defendants' counsel as incompetent, it being competent for the witness only to repeat the conversation had, leaving the court to judge of the effect and intention of the language.

A. I did not.

Q. 18. Did you ask him to "play off" on the defendants, or anything to that effect?

A. I did not, unless what I have already stated could be so construed.

Q. 19. Did you ever know of any written or printed agreements or warranties being made with or given to any persons interested in the use of your machines or who took them out to be used or tried on their farms in 1863 or 1864?

A. I did not.

Q. 20. You have been engaged in selling mowing machines as an agent for several years, have you not?

355 A. I have for the past ten years, more or less.

Q. 21. Are you or are you not acquainted with the different contracts of warranty which manufacturers of or dealers in mowing machines generally give to purchasers when selling machines?

A. I am; I have seen the blank one offered in evidence by the defendants, and it is about the usual form.

Q. 22. Did you or Porter & Bro. or George Cleveland use or give farmers any such a contract in connection with any of your machines in 1863 or 1864?

A. Not that I ever knew of. I should say no.

Q. 23. Did you ever see or hear of any such contract in connection with your machines in either of those years or not?

A. I did not; I think I should have known of them if it had been our practice to use them.

Q 24. Why did you make the arrangements which your referred to in your other deposition with Porter & Bro. and Cleveland in referrence to making your machines?

Objected to by defendants' counsel as incompetent and immaterial.

356 A. Because I hadn't the means within my control to make my experiments and to bring my machine up to a success.

Q. 25. If you had not made these arrangements or others of a similar nature would it have been possible for you to have ever completed your invention or reduced it to practice or not?

Objected to by defendants' counsel as incompetent and immaterial.

A. It would not. I was destitute of means. I had a quarter of a section of wild land in Iowa which at that time, I suppose, was worth about $500. This constituted my resources at that time. That is the land the mortgage was given on to secure the note spoken of in my testimony before, and I finally lost the land for the taxes on it.

Q. 26. In your arrangements with Porter & Bro. or Cleveland were you or were you not to have the control or management as regards sales?

Objection by defendants' counsel as incompetent and not the best evidence.

357 A. My recollection is that I had no control of the business either with Porter & Bro. or Cleveland.

Q. 27. Then did you or did you not have any control of the machines which Porter & Bro. had on hand when your arrangements with them was closed in the fall of 1863, or anything to say in reference to such machines until your next arrangement with them?

A. I did not.

Q. 28. As I understand you, you say it was necessary that you should make arrangements of this kind giving the practical control of a limited number of machines when manufactured to other parties. Is that correct?

A. It is.

Q. 29. State fully, but briefly, all the facts connected with your agreement of Nov. 25, 1865, with William B. and Cyrus A. Werden and transactions under the same.

A. The agreement spoken of provides that they should build fifty machines for the harvest of 1866 and one hundred machines for the harvest of 1867 and one hundred machines for the harvest of each year thereafter. In the year 1866 they undertook to
358 build the fifty machines. I think they got out eight, possibly ten, for the harvest of that year. In 1867 they made twenty-five. Some of these were too late for the market of that year. In

1868 they built thirty machines under their contract. During these years I had urged them to build the machines the contract called for, and in the fall of 1868 I notified them that they must either fulfill their contract or rescind it; that I could not feel along in this way any longer. Upon this notice they went forward and built one hundred machines for the harvest of 1869. In the latter part of August of that year they called on me to know what I was going to do the next year in relation to these machines. I said to them that that would depend entirely upon what they proposed to do. If they proposed to build the machines their contract called for I proposed to do my part of the contract, but I could not and would not accept anything less than a complete fulfillment
359 on their part. They said they could not and would not undertake to build the machines the contract called for for the next year. They proposed to me to build a few machines, just enough to keep up appearances, until they has disposed of the stock on hand. They had refused during all these years to advertise their machines in any manner or to put them away from the shops where they were made for a market, except, I think, in two instances.

They finally told me in this conversation that they would not build the machines called for if they had to sell the machines on hand for old iron. We finally arranged at this time to meet the next day but one, which, I think, was the 27th day of August, and settle up our matters. We met pursuant to this understanding and they notified me very promptly that they would not settle with me and rescind the contract and reassign to me the patent of
360 July 23d, 1867, that was issued to me and them jointly. They told me in substance and in fact to go to hell and help myself; that their contract was good and they were going to hold their share of the patent of 1867 under it, but they would not fulfill their contract. There was nobody present but myself and the two Werdens. I took counsel and employed Mr. J. B. Welch, an attorney of Waukegan, to go to them for me and try to effect a settlement. This was after I had endeavored to get them to talk this matter over in the presence of disinterested parties. I instructed Mr. Welch to keep memoranda of all their statements to him. They gave him the same treatment that I had received, refusing absolutely to fulfill their contract in any of its provisions. I then told Mr. Welch to declare the contract at an end, after having given them a certain length of time—I think forty-five days, or till about the middle of October—to shape themselves so as to fulfill the contract for
361 the coming year. I left them virtually at the time we undertook to make a settlement—in the last of August, 1869. I have never had anything to do with them since.

Defendants' counsel gives notice that he will move to strike from the testimony all that part of the last answer of the witness which appears to be hearsay and statements had and made other than with the Werdens, and also all such other parts of the answer as appear to be irrelevant and incompetent.

Q. 30. State what you did afterwards with or in reference to the patent sued on in this case.

A. On August 12th, 1870, I sold this patent to my brother, Hugh Graham, of Bloomington, Ills., for the sum of $400 in money and some other consideration. My brother was fully informed as to the position of the Werdens and their contract at the time he purchased, and soon after that he notified the public of the fact of his purchase through an advertisement in a newspaper pub-
362 lished at Waukegan. I stated to my brother the whole history of the Werden matter, including the facts stated above, at the time he purchased, and he was otherwise advised of their ignoring their contract and refusing to perform its provisions. In the winter of 1872–'3, knowing the fact that the Spragues were infringing this patent, I went to Providence to try to effect a compromise. I failed to do it, and I made a second visit at their request. We again failed. I then—in December, 1874—succeeded in getting a suit brought against Gammon & Deering, of Chicago, as vendors of the Sprague machine, which was finally carried through to a decree at a cost of something over $1,000, the expense being borne entirely by my brother and myself. The Werdens never offered to pay a cent of the expenses of the suit or of my trips East. I never have received one cent from the Werdens, except a part of the wages I earned in accordance with that
363 contract. I never had anything to do with the license or sale to Callahan; never knew that such a sale had been made until I discovered it from the defense in this suit, & I never have received or been offered by the Werdens or — from them one cent of the result of that sale or license, nor has my brother. My brother neither has nor had any interest in the 1867 patent.

Adjourned till October 25th, at ten o'clock a. m.

OCTOBER 25TH, 1879.

Met pursuant to the adjournment.

Present: For complainants, as before; for defendants, M. D. Leggett, Esq., and H. S. Towle, Esq.

Counsel for defendants insists upon the objections heretofore made and waive.

Cross-examination of Mr. Graham waived.

ALVARO B. GRAHAM.

Counsel for the complainant offers in evidence a certified copy of the bill of complaint filed Sept. 9, 1879, in the case of Al-
364 varo B. Graham *vs.* William B. Werden, Cyrus A. Werden, Cyrus H. McCormick, and Leander J. McCormick, now pending in the superior court of Cook county, Illinois, and a certified copy of the answer of Cyrus H. and Leander J. McCormick to said bill, filed in the same case October 15, 1879; and the same are marked, respectively, "Complainant's Exhibit Bill" and "Complainant's Exhibit Answer."

Counsel for the defendants says that while he desires that this answer is the answer that will be permitted to remain in the case for hearing, and desires that it is a correct statement of the facts, yet

consents that a copy may be used, with a certification of the notary public, the same as if certified to by the clerk of the superior court.

The counsel for the defendants objects to the introduction of said record in this cause for the reasons—

1st. That the complainant's time for taking rebutting testimony has closed.

365 2nd. That the document purporting to be the record of an answer in the superior court has never been read nor signed by either of the defendants in this suit.

3rd. That the narration purporting to be the facts in said alleged answer pertaining to the purchase of a shop right from Werdens by the defendants is not true.

4th. That it is the purpose of the defendants to cause the answer in the superior court above referred to to be corrected to correspond with the facts.

5th. That it is irrelevant to the issues in this cause.

Counsel for the complainant requests that at the hearing of this cause the defendants will produce and permit the use of the certified model which they hold of the invention secured by the patent sued on; and notifies counsel for the defendants that unless said certified model be so produced they will ask the court for an order on the defendants to bring the same into court, that it may be used

366 at the hearing, or that the complainant may be allowed to make a duplicate of it for that purpose.

Counsel for defendants says that he has no knowledge of the existence of any such model.

November 5th, 1879, at ten o'clock a. m., said parties met pursuant to notice.

Present: Messrs. Banning & Banning, counsel for complainant, and Charles K. Offield, Esq., of counsel for defendant.

SAMUEL I. BRADBURY, a witness produced, sworn, and examined on the part of the complainant, deposed and testified as follows:

Direct examination by THOMAS A. BANNING, Esq., of counsel for complainant:

Q. 1. State your name, age, occupation, and place of residence.

A. Samuel I. Bradbury; age, fifty years; am a printer and live at 445 West Lake street, Chicago, Illinois.

Q. 2. State what business you were engaged in — 1870.

A. Printing and publishing a newspaper called "The Lake

367 County Patriot," in the city of Waukegan, Lake county, Illinois. I was in such business publishing and printing such paper from the year 1866 to the year 1877, both inclusive; that paper was a newspaper of general circulation exceeding one thousand copies in 1870.

Q. 3. Look at the files of this paper called "The Lake County Patriot" and state if you recognize them; and, if so, what they are.

A. I do recognize them; they are the files of my paper for the year 1870, published as stated in my last answer.

Q. 4. Look at the papers numbered 37, 38, 39, and 40, dated, respectively, September 10, September 17, September 24, and October 1, 1870, and state if you find in them any notice signed with the name of the complainant in this case; if so, please state what the notice is and have it copied into and made a part of your answer.

Defendants' counsel objects to this question as irrelevant, incompetent, and immaterial.

A. It is a notice given by Hugh Graham and is as follows:

"*Caution.*

BLOOMINGTON, ILLS., *September* 7, 1870.

368 Public notice is hereby given that the undersigned did on the 12th day of August, A. D. 1870, purchase the entire patent right of A. B. Graham, the inventor and patentee, covering the harvester known as the Graham reaper and mower.

Now, all parties or persons are hereby warned against making, selling, or vending the same, as all parties will be held liable for any infringement of the same to the full extent of the law after the date first above mentioned.

HUGH GRAHAM."

Q. 5. State what issues of the papers that notice was published in and in what part of the paper it was published in each issue.

Same objection as to the last question by counsel for defendants.

A. It was published in papers dated September 10, September 17, September 24, and October 1, of the year 1870, and was printed on the first page of each of those dates.

369 Q. 6. Did it occupy a conspicuous or an obscure place in those issues?

Same objection by counsel for defendants, and, further, the question not calling for the best evidence.

A. A conspicuous place. The first page was considered a conspicuous place in that paper.

Counsel for complainant offers said notice in evidence and the files of "The Lake County Patriot" as identified by the witness above.

Counsel for defendants objects to such evidence as incompetent and immaterial.

Q. 7. Do you know whether William B. and Cyrus A. Werden, of Waukegan, Ills., or either of them, were subscribers to "The Lake County Patriot;" and, if so, how the same was delivered to them at the time said notice was published in September and October, 1870, as stated by you above?

Defendants' counsel objects as incompetent and immaterial.

A. I know that William B. Werden was a subscriber to
370 that paper at that time and that it was delivered to him at his store by the carrier. I think Cyrus A. Werden was also a subscriber to that paper and received it through the post office at that time, but I am not sure.

Cross-examination by Mr. OFFIELD:

X Q. 1. How long had you owned or been connected with this paper in September, 1870?

A. About four years and eight months.

X Q. 2. What paper did this supersede?

A. None directly; indirectly through having some material that was supposed to have been in the old office. It was supposed to have been a descend-nt of the "Porcupine."

X Q. 3. What paper was the "Porcupine" and when and for how long was it published at Waukegan?

A. It was a paper of general circulation, started March 4, 1845, and was discontinued some time in 1847.

X Q. 4. What papers of general circulation were published
371 in Waukegan between 1860 and 1870?

A. "The Lake County Democrat," "The Excelsior," and "The Lake County Citizen." I do not know whether the files of those papers are still in existence or not.

X Q. 5. Have you seen either of the Werders lately to talk with them in regard to their interest in Graham's patent and about your coming down here to testify?

A. I have not.

X Q. 6. Do you know anything about who signed that notice which you have read as appearing in your paper or have you ever seen or known any such person as Hugh Graham?

A. I do not know by whom the paper was signed. I only know that it was signed "Hugh Graham." I have no remembrance of ever having seen Hugh Graham.

X Q. 7. All the recollection you have about is this, is it not, that you find among your old files of the "Patriot" a notice signed "Hugh Graham," and you suppose that there must have been
372 an original notice like this or you would not have published it?

A. I am certain there was or I wouldn't have published it.

X Q. 8. This notice may have been handed you by Cyrus A. or W. B. Werden, may it not, for publication?

A. I am certain it was not.

X Q. 9. Why?

A. Because they did not hand it to me.

X Q. 10. Either of the Werdens may have made out this notice, signed the name of Hugh Graham to it, and either sent it or mailed it to you to be published, may they not?

A. They may, but I should say not. I think it is not the character of either of those men to forge a signature.

X Q. 11. But you don't know whether that was the signature of Hugh Graham or not, as you never saw him?

A. I do not.

X Q. 12. How long did you publish this paper after 1870?

A. Until the first of January, 1878.

X Q. 13. The Werdens were building and selling reapers
373 and mowers prior to 1870, were they not?

A. I think they were.

X Q. 14. They made and sold them after 1870 and down to the time you stopped publishing your paper, in 1878, did they not?

A. I think they did not. I don't remember when they discontinued making them.

Redirect examination by complainant's counsel.

Re-D Q. 1. Do you recollect how you received the notice referred to and the money for its publication?

A. I am not positive, but think I received the notice by mail, with the amount enclosed.

SAMUEL I. BRADBURY.

The witness claims fees for day's attendance, $1.50, which is paid by complainant's sol'r.

Counsel for complainant offers in evidence a certified copy of the agreement between Alvaro B. Graham and William B. and Cyrus A. Werden, dated November 25, 1865, a copy of which has been offered in evidence by the defendants, and states that his
374 only object in now offering said certified copy is to show that the agreement was recorded in the Patent Office, at Washington, on the 28th day of February, 1870.

Adjourned to November 7, 1879, at ten o'clock a. m.

NOVEMBER 7TH—10 o'clock.

Parties met pursuant to adjournment.

Present: As before.

JAMES B. WELCH, a witness produced, sworn, and examined on the part of the complainant, being first duly sworn, testified as follows:

Direct examination by THOMAS A. BARRINGTON, Esq.:

Q. 1. State your name, age, occupation, and place of residence.

A. James B. Welch. I am a lawyer, justice of the peace, and city attorney of Waukegan, Ills., where I reside. I am forty-three years old.

Q. 2. Did you ever do any business for Alvaro B. Graham in 1869, or about that time, in reference to his harvester patent or in reference to the agreement between him and Cyrus A. and William
375 B. Werden of Nov. 25, 1865? If so, state what said business was and all about it.

Defendants' counsel objects as immaterial, irrelevant, and incompetent.

A. Yes, sir; the business was in relation to certain patents on a reaper or mower which Mr. Graham claimed were his, and that he was the inventor of the same. I went to Mr. William B. Werden, pursuant to Mr. Graham's request, and had several conversations with Mr. Werden in relation thereto, of which I made memoranda immediately thereafter.

Q. 3. Look at this paper now shown you and state whether or not it contains the memoranda referred to in your last answer.

Defendants' counsel objects to this witness relating any conversation had with either W. B. or Cyrus A. Werden or to any statements made by either of the Werdens to him for the reason that both W. B. and Cyrus A. Werden have testified in this cause and have been cross-examined by complainant's solicitor, and that at said examination the attention of neither of the Werdens was
376 called to the time when, place where, or person with whom any such alleged conversation was had, and no reference was made to any previous statements made by either of the Werdens to this witness; and defendants' counsel further objects to any conversation had between either of the Werdens and this witness as incompetent and irrelevant.

A. It does.

Q. 4. Is this paper in your handwriting, and was it written immediately after your several conversations with Mr. Werden?

A. Yes, sir; it is in my handwriting, and was written immediately after I had the several conversations with W. B. Werden.

Q. 5. Does it contain a true statement, as far as it goes, of what occurred or what was said at those several conversations or not?

A. Yes, sir; it does.

Q. 6. Is it now necessary or not for you to refer to this paper to refresh your memory with regard to such conversations?

A. Yes, sir; it is.

Counsel for complainant offers said paper in evidence
377 for the purpose of showing the court what the witness had before him from which to refresh his memory, and the same is marked "Complainant's Exhibit Welch Memoranda."

Defendants' counsel objects to the introduction of this exhibit for the reason that it appears to have been altered, erased, and interlined, and portions of the same to have been written in different handwriting and ink from the main body of the exhibit, and also as incompetent and irrelevant.

Q. 7. Look at these two alterations & erasures on the first page and one interlineation of a full line on the second page and state whether or not they are in your handwriting and whether or not they were made at the time the instrument was first written, and whether the whole paper is the same now as when you finished and signed it after the interviews with Mr. Werden to which you have referred.

A. As far as I can recollect, they were made by me and at
378 the time that this memoranda was made. The interlineations on the second page is in my handwriting and was made at the time and date which is set forth in the said memorandum. As far as I can now recollect, the paper is now precisely the same as when I first made it, with the exception of some writing and erasures on the back.

Q. 8. Refreshing your memory from that paper, state fully what was said between you and W. B. Werden relating to their continuing the manufacture of mowers or otherwise carrying out the agreement between them and Mr. Graham of Nov. 25, 1865.

Defendants' objection to Q. 3 repeated.

A. I can't remember the date of the agreement, but I had in my possession a contract between them, the contents of which I do not now particularly recollect. It would be necessary for me to look at such contract in order to refresh my memory. Assuming that the agreement referred to is the agreement I then had in relation
379 to said agreement, the conversations which I had were substantially as follows:

I went to W. B. Werden September 11, 1869, and asked him what he was going to do about Graham's machine. He (Werden) asked me why Graham did not come himself; that he (Graham) knew all about the matter, and it was none of Graham's business what he was going to do about it; that it was none of his d—d business how many machines were made the next year or whether he made a single one for the next five years. Said Werden said to me he would not give a d—n for advertising; that Graham had it all his own way, and that Graham could have advertised if he (Graham) saw fit. The substance of the next conversation I had with said Werden was, September 13, 1869, as follows: I notified Werden, by request of Graham, that he must commence work on the 15th of October following. Said Werden told me that Graham might kiss
380 his —; that he would do as he d—d pleased; that he would not build one hundred machines the next year, and would not, perhaps, build any; that Graham was the captain. I had another conversation with said Werden September 14, 1869. I went to said Werden and demanded letters patent of him, at the request of Graham. Werden said he would not give them up, because Graham had no right to them. I also notified Werden that in consequence of his failure to perform his part of the contract in the past and of his declaration that he (Werden) would not fulfil his contract, that said contract was declared at an end by me, as the attorney for Mr. Graham. Thereupon Werden said that Graham might go to h—l and help himself. Werden said he did not care what Graham did, and that Graham might go on and get up another company; that he did not care what Graham did. That is substantially the conversations I had with Mr. Werden.

381 Q. 9. Look at this paper now shown you, dated November 25, 1865, signed by A. B. Graham, W. B. Werden, & C. A. Werden, and witnessed by J. E. Clarkson, and state whether or not

it is the agreement which you had at the time of your conversations with Mr. Werden, to which you referred in your last answer.

A. Yes, sir; it is the same agreement.

Q. 10. Did Mr. Werden express a willingness in any of those conversations to go ahead in the manufacture of the machines under that agreement or otherwise to carry it out on their part?

A. No, sir; never in any conversation that I had with him did he express a willingness or intention to carry out said agreement, but he invariably expressed himself to the contrary.

Q. 11. Did you tell Mr. Werden at the time you first went to him that you were acting as attorney for Mr. Graham in reference to the matters above mentioned?

A. Yes, sir; I think I did. He was certainly aware of it.

Cross-examination by Mr. OFFIELD, of counsel for defendants:

382 X Q. 1. Which Mr. Werden did you have all of these alleged conversations with?

A. With William B. Werden.

X Q. 2. Did you have the conversations on the dates indicated in your memorandum exhibit, namely, Sept. 11th, 13th, 14th, 15th, and 16th, 1869?

A. Yes, sir.

X Q. 3. How did you happen to have five conversations with Mr. Werden when the whole matter seems to have been gone over completely in the first one of Sept. 11th? What occasion was there for the other four?

A. I went there the first time and each subsequent time at the special instance and request of Mr. Graham and had the conversations with W. B. Werden.

X Q. 4. Was anybody present at these five conversations?

A. I do not remember, but think the conversations, *were* most of them, if not all, were had in his store, and when I went to see him I think I usually called him aside and talked with him.

X Q. 5. And as soon as you got through your talk with W. B. Werden you would go right back to your office and write
383 down what you recollected that he said to you, or such portions of it as you thought best; is that it?

A. After having the respective conversations with him I went directly back to my office and immediately put down in substance and generally the exact words that Mr. Werden said to me on those respective occasions, and there is nothing in the memoranda of said conversations which I put down, because I thought it was best to do so for the simple reason that the Werdens and I have always been friends, both before these conversations and since that time; I have done business for both of them, more or less, for quite a number of years past.

X Q. 6. Then you do not claim that this memoranda exhibit contains the entire five conversations you had with W. B. Werden, but only choice and appropriate selections which you thought would be favorable to your client, Mr. Graham; is that it?

A. I do not claim that it contains the five entire conversations, but I do claim that it contains the entire substance of the five
384 conversations, and that it does not contain choice selections from such conversations because Mr. Graham was my client, and the insinuation by counsel that the memoranda contains choice selections from such conversations is absolutely and wholly untrue.

X Q. 7. You don't pretend, in your memoranda exhibit, to give your language or your part of those conversations, but only your chosen selections from what you recollected Mr. Werden's saying to you?

A. No, sir; I do not pretend to give my language or my part of the conversations in that memoranda. There are certain parts of my language to Mr. Werden and an account of certain acts I did in that memoranda. There is nothing in it that is either chosen or selected, but all that is contained in it is absolutely true in substance, and the language there which purports to have been used by Mr. Werden is substantially if not literally the language he used.

X Q. 8. This paper indicates that you had your first conversation with Mr. Werden Saturday, Sept. 11, 1869. Did you have
385 more than one conversation with him upon that day?

A. I can't recollect; I didn't make note of it.

X Q. 9. Then you base your entire recollection of the five conversations you had with Mr. Werden as to substance and reliability upon this memorandum exhibit?

A. Yes, sir; of course, there are many other things which are coming back to my recollection under this cross-examination. I now remember distinctly that Mr. Graham was invariably in my office, when I went to see Mr. Werden, without exception, and he remained in the office until my return from every conversation I had with Mr. Werden.

X Q. 10. Did any of these five conversations with Mr. Werden occur on Sunday?

A. I can't recollect without referring to the memoranda, and it might be doubtful then.

X Q. 11. Have you no independent recollection as to whether Mr. Graham was in your office on Sunday, and whether you, at his request on that day, went to Mr. Werden and had one of these five conversations?

386 A. No, sir; I have not. I know that Mr. Graham for perhaps a year was frequently in my office—both Sundays and week days.

X Q. 12. Mr. Werden claimed to you in those conversations that he had lived up strictly to the letter of the contract with Graham, and proposed to do so in the future, did he not?

A. No, sir; he never did; but, as I recollect now, he refused absolutely to perform what Mr. Graham claimed was his (Werden's) part of the contract.

X Q. 13. In looking over this alleged memoranda in which you have sworn that you put down either the exact language or the substance of the language of W. B. Werden I find that you have written this statement as having been made by him: "That they

had lived up to the letter of the contract and still proposed to do so in the future." Can you explain the apparent discrepancy between your last sworn answer and the alleged report of the statement of W. B. Werden, as shown by this exhibit?

A. There is no discrepancy.

X Q. 14. You have no explanation to make, then, having
387 your attention called directly to your sworn answer and the quotation from this memoranda exhibit?

A. Simply what I stated before; that W. B. Werden refused to carry out his part of the contract, as Mr. Graham understood it.

X Q. 15. In some one, if not in all, of those conversations Mr. Werden claimed that Mr. Graham had not lived up to his part of the agreement, but had violated it in several respects and had cost him and his brother a large amount of money, didn't he?

A. I recollect Mr. Werden saying (without referring to the memoranda) that Graham had cost them quite a sum of money—substantially that.

X Q. 16. Do you wish the court to understand that you have no independent recollection, outside of this memorandum exhibit, as to whether Mr. Werden claimed to you that Graham had violated his part of the contract?

A. I have no independent recollection about this. I have a general impression of having had other conversations with Mr. Werden, but not at the instance or request of Mr. Graham.

388 X Q. 17. If Mr. Werden had made any such statement as that during any one of those five conversations you would not have failed to put it down in this memorandum exhibit, would you—that is, that Mr. Graham had not lived up to his part of the contract?

A. All that I can remember in relation to these five conversations is contained in this memorandum exhibit, and that is, in substance, correct. I have no independent recollection of said conversations, except as contained therein. All that I can do now in relation to said conversations is to swear that the memoranda is true in substance.

X Q. 18. Mr. Werden might have made this statement to you as to Graham's violating his contract at one of these five conversations and you not have put it in the memoranda?

A. I repeat that I have no independent recollection outside of the memorandum containing these alleged conversations, and that said memoranda contains all, in substance, of each of said conversations.

X Q. 19. Question repeated.

389 A. As last before.

X Q. 20. Do you refuse to answer this question in any other way than your last reply?

A. No; I do not refuse to answer it any other way, for the simple reason that I cannot answer it any other way; that the memoranda of said conversations in substance is true and contains substantially all of said conversations that occur-ed at the time. That is all I can say in relation thereto.

X Q. 21. Might not Mr. Werden have stated at one of those conversations that Graham had not fulfilled his part of the contract? Please answer the question yes or no.

A. If he did so state it is contained in the memoranda of the conversation. After the lapse of ten years I cannot recollect, outside of the memoranda of said conversations, what Mr. Werden might or might not have said.

X Q. 22. You have read and examined this memorandum to-day, have you not, and your entire testimony in all of your answers was taken and quoted from this memorandum while in your hands before you to-day, was it not?

390 A. I have had the memoranda in my hands. I have read and examined it to-day. My answer to Q. 8 was quoted substantially from the memoranda, but I did not quote the entire memoranda.

X Q. 23. Do you know whether or not this memorandum exhibit from which you quoted contains the statement by Werden that Graham has not lived up to his part of the contract?

A. I don't recollect without looking at the memoranda.

X Q. 24. Is your recollection of the contents of this memoranda so feeble and uncertain that you cannot recollect its statements when your attention is called specifically to them within a few moments, to-, after you have read and examined the memoranda?

A. No, sir.

X Q. 25. If your recollection is not of that character what prevents you from stating whether you recollect if this memoranda which you have just read and examined contains this statement of the failure of Graham to perform his part of the contract, and explain to the court, if you can, how you can recollect

391 to put down the exact language or substance of your conversation with a party and how you can fail to recollect a portion of such conversation after having just read the memoranda of such conversation and having your attention called especially to it?

A. That question is so extremely metaphysical that I am unable to explain it on any principal of philosophy, either to the court or to the counsel, and for a further reason, so far as I can explain, neither the gentleman nor the court can quote *verbatim* either his question or the answer I have made to it. As long as I have no independent recollection outside of the memoranda, I will not testify to anything but what is contained in the memoranda and while it is before my eyes.

X Q. 26. Can you explain on any principle of philosophy how you can recollect to write down the exact language and substance of a conversation at your office had with a party at some other place and yet fail to recollect whether what you have written

392 down contains substantially a certain statement, having but a few moments before read, examined, and quoted from the conversation so written down?

A. I cannot explain upon any principle of philosophy either the laws of recollection or memory, for the reason that they have never yet been explained. I wish simply to repeat that I cannot answer

any questions put to me by counsel and do not wish to testify to anything in relation to such memoranda without I have the same before my eyes.

X Q. 27. You testified on behalf of this same complainant, at Waukegan, in August last, in regard to the same subject-matter of this memoranda and your five interviews with W. B. Werden, did you not, in a suit then pending in the circuit court for the eastern district of Wisconsin?

A. I did.

X Q. 28. Have you any better or poorer recollection now than you had then of this subject-matter last referred to?

A. Not as to these conversations.

393 X Q. 29. You had this memoranda exhibit before you and referred to it at the time you then gave your testimony?

A. I had.

X Q. 30. At the time you gave your testimony as aforesaid you went outside of this memoranda exhibit and gave several alleged remarks and statements made by W. B. Werden at these different conversations and not contained in this memoranda exhibit—swore to them at that time as statements made to you by W. B. Werden.

A. Possibly I did, but I gave the substance of the conversations as I then recollected them. I did not refer to the memoranda so closely then as have to-day, and I have a general recollection of having many other conversations with Mr. Werden.

X Q. 31. Did you or did you not state in your testimony at Waukegan last August that Werden claimed on one of these conversations that Graham had not lived up to his part of the contract?

A. I don't recollect distinctly; might possibly have stated
394 that Werden in some of his conversations stated that to me.

X Q. 32. Don't you know that in your testimony in August last no other conversation was referred to be either you or complainant's counsel but those referred to in this memoranda exhibit?

A. I do not recollect distinctly. The intention there was to give my testimony the substance of said five conversations.

X Q. 33. Was it your custom in 1869 or at any other time when you interviewed different parties, at the request of your clients, to keep a record of such interviews upon legal cap from day to day and finally sign it as counsel, or did you ever do it before the instance shown in this memorandum exhibit?

A. It was not my custom then or now to keep memoranda of conversations, and there are only a few instances in which I have kept memoranda of conversations, and then only at the instance and request of the client.

Redirect examination by Mr. BANNING:

R. D. 1. In one or two of your answers in cross-examination you have stated that Mr. Werden absolutely refused to perform
395 what Graham claimed was his part of the contract. Do you now remember what Graham claimed the Werdens were bound to do as their part at that time?

Defendants' counsel objects as incompetent.

A. I have a general impression that Mr. Graham claimed that the Werdens' part of the contract was to advertise the machines, to put them on the market by advertising them, and that they were to manufacture a certain number yearly.

JAMES B. WELCH.

The witness claims fees for one day's attendance and milage from Waukegan to Chicago (36 miles), $5.10, paid by complainant's counsel.

COMPLAINANT'S EXHIBIT BILL. Fred. C. Hale, Notary Public.

STATE OF ILLINOIS, } ss:
Cook County, }

In the Superior Court thereof.

To the honorable the judges of the superior court of Cook county, in chancery sitting:

Humbly complaining, shows unto your honors your orator,
396 Alvaro B. Graham, of the city of Chicago, county of Cook and State of Illinois—

That in the year 1863 and afterwards your orator invented certain new and useful improvements in harvesters, for which letters patent of the United States in due form were granted and issued as follows:

No. 67041, dated July 23, 1867, to your orator, as assignor to himself and William B. and Cyrus A. Werden; No. 74342, dated February 11, 1868, to your orator; No. 76346, dated April 7, 1868, to your orator, and No. 87561, dated March 9, 1869, to your orator, and the said letters patent, some of them, have become and are of great value.

That before obtaining any of said letters patent, to wit, on the 25th day of November, 1865, your orator, being wholly without means, entered into an agreement in writing with William B. and Cyrus A. Werden, of Wauk-an, Illinois, for the purpose of having said patent mowing and reaping machines manufactured and sold in the market, which agreement was recorded in the Patent Office at Washington on the 28th day of February, 1870, Liber M[12],
397 page 297, and a copy of which is hereto attached and made a part of this bill, marked "Exhibit A."

That, in pursuance of said agreement, your orator, on the said 25th day of November, 1865, signed and delivered to the said William B. Werden and Cyrus A. Werden an instrument in writing, purporting to be an assignment to your orator and the said William B. and Cyrus A. Werden of the full and exclusive right to said invention, and of all improvements made by your orator, as fully set forth and described in the specification which he had previously prepared and executed preparatory to the obtaining of letters patent therefor, which assignment was recorded in the Patent Office, at Washington,

on the 5th day of December, 1865, in Liber Z 7, page 403, and a copy of which is hereto attached and made part of this bill, marked "Exhibit B," and that said instrument being recorded as aforesaid, the said letters patent No. 67041 were issued to your orator and the said William B. and Cyrus A. Werden jointly, as above mentioned.

398 That afterwards, to wit, on the 27th day of April, A. D. 1878, the said William B. and Cyrus A. Werden signed and delivered to one Charles Colahan an instrument in writing, purporting to sell and assign to the said Colahan, his heirs, assigns, and legal representatives, a shop right or license to manufacture the said invention described and claimed in said patent No. 67041, a copy of which instrument is hereto attached and made a part of this bill, marked "Exhibit C;" and that on the 29th day of April, 1878, the said Charles Colahan signed and delivered to Cyrus H. and Leander J. McCormick an instrument in writing, purporting to sell, assign, and set over to the said McCormick all his right, title, and interest in said patent No. 67041, as acquired by virtue of the said instrument signed by the said William B. and Cyrus A. Werden, above mentioned, a copy of which instrument from the said Charles Colahan to the said Cyrus H. and Leander J. McCormick is hereto attached and made a part of this bill, marked "Exhibit D."

399 That after said agreement of the 25th of November, 1865, between your orator and the said William B. and Cyrus A. Werden had ceased to be in force and effect, as hereinafter stated, to wit, on the 12th day of August, 1870, your orator sold and assigned the said patents, No. 74342, No. 76346, and No. 87561, to one Hugh Graham, of Bloomington, Illinois; that the said Hugh Graham then purchased said patent for a valuable consideration and without any notice that the said William B. and Cyrus A. Werden claimed any interest therein whatever; that in making such sale your orator warranted the *the* title to said patents and agreed to protect the said Hugh Graham against any and all claims thereto by other persons, and that your orator is still interested as a licensee of the said Hugh Graham under said patents, and is still the sole owner of said patent No. 67041, excepting such interest, if any, as the said William B. and Cyrus A. Werden and the said Cyrus H. and Leander J. McCormick may be entitled to by virtue of the instrument above mentioned; and your orator charges that the said agreement between

400 your orator and the said William B. and Cyrus A. Werden, made on the 25th day of November, 1865, above mentioned, was made for the sole and express purpose of having said patented mowing and reaping machines manufactured and put on the market, and not for any other purpose or consideration whatever, and that your orator never received any other consideration therefor; that, notwithstanding said agreement was made for the purpose and with the intention aforesaid, the said William B. and Cyrus A. Werden never carried out or performed the same *as* their par-, but absolutely declined and refused so to do, by reason whereof the consideration for said agreement wholly failed and said agreement became null and void and of no force or validity whatever; that on, to wit, the

27th day of August, 1869, the said William B. and Cyrus A. Werden agreed with your orator that said agreement should be considered at an end, and the same was then and there declared vacated, annulled, and forever ended by all the parties thereto, and that the said William B. and Cyrus A. Werden then ceased to manu-
401 facture and sell said reaping and mowing machines and have never since *being* engaged in the manufacture or sale thereof or had any interest in said patents under said contract or otherwise.

That the said instrument of the 25th of November, 1865, purporting to be an assignment under which the said patent No. 67041 was issued to your orator and the said William B. and Cyrus A. Werden jointly, as above mentioned, was and is null and void and insufficient in law to vest the title to said invention or to said patent No. 67041, or any part thereof or interest therein, in the said William B. and Cyrus A. Werden; that the sole consideration for said instrument was the agreement of the said William B. and Cyrus A. Werden to proceed with and continue the manufacture and sale of the said reaping and mowing machines, as above mentioned, and that your orator never received any other consideration therefor; that by reason of the said failure and refusal of the said William B. and Cyrus A. Werden to carry out said agreement on their part, and of the subsequent agreement declaring the same at an end, the considera-
402 tion for said instrument wholly failed, and said instrument became null and void and of no force or validity whatever.

That until recently the said William B. and Cyrus A. Werden have consented to and acquiesced in the discontinuance of said agreement as aforesaid, while all the time your orator and the said Hugh Graham have been at great trouble and expense in reference to said inventions and patents, and that, by reason of such acquies-ence as well as on account of their continuing failure and refusal to carry out said agreement on their part, the said William B. and Cyrus A. Werden and each of them are and in equity ought to be now stopped from asserting or claiming any title or interest whatever in or to said patents or either of them.

That by the sale of said shop right or license to the said Charles Colahan, for the proceeds of which or any part thereof they have never accounted to your orator, the said William B. and Cyrus A. Werden so violated the terms of the agreement above mentioned as to entitle your orator to a re-cission thereof and to a reassign-
403 ment of whatever title or interest they or either of them now have or claim to have in said patents or either of them.

That the said Charles Colahan and the said Cyrus H. and Leander J. McCormick and each and every of them purchased said shop rights or license above mentioned with full notice and knowledge that said agreement between your orator and the said William B. and Cyrus A. Werden had been long since discontinued and ended, and that the said William B. and Cyrus A. Werden had no title or interest whatever in or to said patent No. 67041 or right or power to grant said shop right or license, and that your orator was the sole and exclusive owner of said patent.

That the said William B. and Cyrus A. Werden have never had any title or interest in said patents or either of them since the discontinuance of said agreement as aforesaid.

That your orator then became the sole owner of said patents and entitled to a reassignment of whatever interest they ever had or claimed to have therein; that, instead of making such reassignment, as in equity they ought to have done, the said William B.
404 and Cyrus A. Werden, although often requested, have wholly neglected and refused so to do, and, claiming to have some interest in said patents and each of them, now seek and endeavor in various ways and with a wrongful and malicious intent and purpose to embarrass and frustrate the operations of your orator and the said Hugh Graham thereunder, and to cloud their title thereto, to the irreparable injury of your orator in the premises.

In consideration whereof, forasmuch as your orator is without adequate remedy in the premises save in a court of equity, where matters of this nature are properly cognizable and relievable—

To the end, therefore, that the said William B. Werden and Cyrus A. Werden, Cyrus H. McCormick, and Leander J. McCormick, whom your orator hereby makes defendants to this bill, may answer the premises, but without oath, their oaths being hereby expressly waived under the statute, that the said contract and assignment of the 25th of November, 1865, may be cancelled, rescinded, and declared null and void and forever at an end, and the said William B.
405 and Cyrus A. Werden required to assign to your orator any and all right, title, and interest which they or either of them have or claim to have in, to, or under said letters patent No. 87041, No. 74342, No. 76346, and No. 87561 or any of them; that the said William B. and Cyrus A. Werden and each of them may be enjoined, as well preliminarily as perpetually, from asserting or claiming any right, title, or interest in, to, or under said letters patent or any or either of them, but the said shop right or license to the said Cyrus H. and Leander J. McCormick may be set aside and declared to be fraudulent and void and of no further force or validity whatever as against your orator, and that your orator may have such other and further relief in the premises as may be agreeable to equity and good conscience and as to your honors may seem meet—

May it please your honors to grant unto your orator the writ of injunction, issued out of and under the seal of this honorable court, restraining and enjoining the said defendants, William B. Werden and Cyrus A. Werden, and each of them from asserting or
406 claiming any right, title, or interest in, to, or under said letters patent No. 67041, No. 74342, No. 76346, and No. 87561 or any or either of them or from interfering in any manner with your orator and the said Hugh Graham in reference thereto, and the people's writ of subpœna, issued out of and under the seal of this honorable court, directed to the said William B. Werden, Cyrus A. Werden, Cyrus H. McCormick, and Leander J. McCormick, defendants, commanding them and each of them to be and appear in this honorable court on the first day of the next term thereof, then and

there to answer the premises and to stand to and abide by such order or decree as may be made against them.

And your orator will ever pray, etc.

ALVARO B. GRAHAM.

BANNING & BANNING,
Solicitors for Compl't.

"EXHIBIT A."

This indenture, made and entered into this twenty-fifth day of November, A. D. 1865, between Alvaro B. Graham, of the
407 county of Lake and State of Illinois, party of the first part, and William B. Werden, of county and State aforesaid, and Cyrus A. Werden, of the county of Berkshire and State of Massachusetts, party of the second part, witnesseth:

That whereas the said party of the first part has invented a combined reaping and mowing machine, known and called the "Champion machine," for which invention an application is about to be made to the Patent Office, at Washington, D. C., for letters patent; and whereas the said party of the first part is desirous that the party of the second part shall engage in the manufacture of said machines:

Now, therefore, the party of the first part hereby covenants and agrees to and with the party of the second part that the party of the second part shall and may have the exclusive right to manufacture and sell said machines according to the present model and with improvements thereon and thereto as the party of the first part may become hereafter the inventor of and entitled by law to letters patent therefor prior to the termination of
408 this contract, which said right shall continue and be in force from the date hereof till the patent about to be applied for as aforesaid shall become of no effect by lapse of time: Provided, however, That in case any patent may be obtained for said machine or for any improvements thereon or thereto by the said party of the first part territorial and shop rights to use the same may be sold and granted by the parties hereto as is hereinafter provided.

And the said party of the first part further covenants and agrees to and with the said party of the second part that he will protect and save harmless the said party of the second part against any and every claim which any party or parties may make in and to the right of manufacture and sale of said machines by reason of any agreement or contract made with the said party of the first part prior to the making and delivering these presents.

And the said party of the first part further covenants and agrees to and with the said party of the second part that before letters patent shall be issued for said invention he will make such necessary and proper assignment thereof to *to* the said party of
409 the second part that said patent may and shall be issued to the parties hereto jointly, giving to them an equal undivided one-third interest therein, and in case the said party of the first part

shall hereafter invent any improvements upon the present model which may be patented he shall, before obtaining letters patent therefor, make such necessary and proper assignment thereof to the said party of the second part that the patent therefor may and shall issue to the said parties hereto jointly as aforesaid, and that the party of the second part shall have the right to use said subsequent invention in and about the manufacture and sale of said machine during the time this contract shall be in force exclusively: Provided, That the party of the second part shall have no interest in any invention of the said party of the first part after this contract shall cease to be in force by any reason whatever.

And the party of the first part further covenants and agrees to and with the party of the second part that he will work for the party of the second part in and about the manufacture of said machines and the repa-ring (if required) of the same by the second party,
410 paying therefor such wages as is received at the time by first-class mechanics in this city, so long as the party of the second part may desire his services in the business of said manufacturing and repa-ring, and that he will devote his time entirely to said —.

And in consideration of the covenants and agreements of the said party of the first part the said party of the second part covenants and agrees to and with the said party of the first part that they will manufacture for sale and sell the same, if they can, fifty of said machines the coming season, the said second party being at the whole of the expense of manufacturing and selling the same, and the profits arising from the sale of said machines, after deducting the expenses and losses (if any), to be equally divided between said individuals interested in said profits—that is to say, each receiving one-third of said profits; and the said party of the second part further covenants and agrees to and with the said party of the first part that they will manufacture for the season of 1867 and each succeeding year one hundred machines before mentioned upon the same conditions before mentioned, and the profits arising therefrom to be
411 divided in like manner, and if the business should warrant and the second party so agree to build an excess over one hundred of said machines in any one year, then and in that event the said party of the first part is to pay to the said party of the second part eight per cent. interest annually on third of all such capital as shall be necessary and used by said party of the second part in the business aforesaid in manufacturing said excess and selling and repairing done in said business on said excess.

And it is mutually agreed between the respective parties that no sale of any part or right of said invention shall be made by either party without the written consent of all the others, and when any shoes are made the profits arising therefrom shall be divided as before mentioned, as in case of any other profits.

And it is further covenanted and agreed between the respective parties that the said business of manufacturing, repairing, and selling said machines as aforesaid may at any time hereafter be discontinued by a majority of the individuals to these covenants by giving ninety days' notice to the other of their intention so to do,

provided the said party of the second part shall, before
412 the time of discontinuance, assign to the said party of the first part, in due form of law, any and all right, title, and interest which the said party of the second part may at the time have in and to said invention for said machines and any improvement thereon and thereto made by the said party of the first part and coming within the terms of this contract by virtue of any patent or patents or otherwise.

And the said party of the second part further covenants and agrees to and with the said party of the first part that they will pay to the said party of the first part one-third of the net profits realized from the said business of manufacturing, repairing, and selling said machines over and above the actual cost of manufacturing, repairing, and selling the same and losses sustained and suffered of any and all kinds whatsoever and over and above all actual and necessary expenses incurred in relation thereto, and that upon the first day of January of each and every year or immediately thereafter a complete settlement of the business shall be had and determined.

And it is further agreed and understood between the respective parties that in case a patent is not obtained for said machine
413 this agreement is to become of no effect, and it is also further covenanted and agreed between the respective parties that for all the time in which the said party of the second part shall be actually and necessarily engaged manufacturing or selling any of said machines the same compensation shall be paid to the said party of the second — as is paid to the party of the first part for services so rendered; said amount to be paid out of the receipts.

And it is further covenanted and agreed between the respective parties that the covenants and agreements herein contained shall extend to and be obligatory upon the heirs, executors, administrators, or assigns of the respective parties hereto.

Witness our hands and seals the day and year first above written.

A. B. GRAHAM. [SEAL.]
W. B. WERDEN. [SEAL.]
C. A. WERDEN. [SEAL.]

Signed, sealed, and delivered in presence of—
J. E. CLARKSON.

"EXHIBIT B."

Assignment.

[5. A. B. G., Nov. 25, 1865. 5.]

Whereas Alvaro B. Graham, of Waukegan, in the county
414 of Lake and State of Illinois, has invented a new and improved grain and grass harvester, for which he is about to make application for letters patent of the United States;

And whereas Alvaro B. Graham and William B. Werden, of Waukegan, in the county of Lake and State of Illinois, and Cyrus A.

Werden, of Pittsfield, in the county of Berkshire, in the State of Massachusetts, have agreed to purchase from Alvaro B. Graham aforesaid all the right, title, and interest which he has or may have in and to the said invention in consequence of the grant of letters patent therefor, and have paid to him, the said Alvaro B. Graham, of Waukegan, in the county of Lake and State of Illinois, the sum of one dollar, the receipt of which is hereby acknowledged:

Now, this indenture witnesseth: That, for and in consideration of the said sum to him paid, he has assigned and transferred and does hereby assign and transfer to the said Alvaro B. Graham and William B. Werden, of Waukegan, in the county of Lake and State of Illinois, and Cyrus A. Werden, of Pittsfield, in the county of Berkshire, in the State of Massachusetts, the full and exclusive
415 right to said invention of all the improvements made by him as fully set forth and described in the specification which he has prepared and executed preparatory to the obtaining of letters patent therefor:

The same to be held and enjoyed by the said Alvaro B. Graham and William B. Werden, of Waukegan, in the county of Lake and State of Illinois, and Cyrus A. Werden, of Pittsfield, in the county of Berkshire, in the State of Massachusetts, for their own use and behoof and for the use and behoof of their legal representatives, to the full end of the term for which said letters patent may be granted, as fully and entirely as the same would have been held and enjoyed by him if this assignment had not been made.

In testimony whereof he has hereunto set his hand and affixed his seal this 25th day of November, A. D. 1865.

ALVARO B. GRAHAM. [G. S.]

Sealed and delivered in the presence of—
JOHN E. CLARKSON.
D. N. BARKER.

416 "EXHIBIT C."

WAUKEGAN, ILL., *April* 27, '78.

This memorandum of agreement, made between Chas. Colahan, of Cleveland, Ohio, and W. B. Werden & Cyrus & A. B. Graham, of Waukegan, Ill., witnesses:

The Werdens, being the owners of an interest in the invention of said A. B. Graham, do hereby sell and assign to said Charles Colahan, his heirs, assigns, and legal representatives, one shop right to manufacture the said invention, and also as shown and described in patent number 67041, dated July 23d, 1867, for the full term of said patent of the said A. B. Graham, for the sum of fifty dollars, the receipt of which is hereby acknowledged; and it is further agreed that should said Werdens, within thirty days from date hereof, offer and be prepared, by virtue of their ownership in said invention, to sell and transfer unto said Colahan the full and exclusive right in said invention and patent for one hundred and fifty dollars in addition to the am't paid for said shop right, and the said Colahan shall accept

and pay the said am't, the said Colahan shall own all, or if
417 said Colahan should refuse to accept said offer for the whole of said invention as above, then said shop right as above shall be void.

WM. B. WERDEN.
CYRUS A. WERDEN,
By W. B. WERDEN,
His Attorney-in-Fact.
CHAS. COLAHAN.

Witness:
F. H. WERDEN.

"EXHIBIT D."

Whereas A. B. Graham did make certain improvements in harvesters, and a patent was issued by the United States bearing date July 23rd, 1867, and numbered 67041, and said patent was issued to said A. B. Graham and W. B. Werden & Cyrus A. Werden, of Waukegan, Lake Co., Ills.; and whereas said W. B. Werden did assign and sell for himself and said Cyrus Werden one shop right in said invention & patent, as therein shown & described, unto Chas. Colahan, of Cleveland, Ohio, and unto his legal assigns and legal representatives; and whereas Messrs. C. H. & L. J. McCormick, of Chicago, Ills., are desirous of owning and using said shop right:

418 Now, this indenture witnesseth: That for and in consideration of fifty dollars, paid to me, the receipt of which is hereby acknowledged, I, the said Chas. Colahan, do hereby sell, assign, and set over unto said McCormicks all my right, title, and interest in said patents as acquired by virtue of a certain agreement & purchase of said Werdens, dated April 27, 1878.

Chicago, Ills., Ap'l 29, 1878.

CHAS. COLAHAN.

Endorsed: Filed Sept. 9, 1879. Jno. J. Healey, clerk.

STATE OF ILLINOIS, } *ss:*
Cook County, }

COMPLAINANT'S EXHIBIT ANSWER. Fred. C. Hale, Notary Public.

Superior Court of Cook County. In Chancery.

ALVARO B. GRAHAM
vs.
WILLIAM B. WERDEN, CYRUS A. WERDEN, CYRUS H. MCCORMICK, and LEANDER J. MCCORMICK.

The joint and several answers of Cyrus H. McCormick and
419 Leander J. McCormick, two of the said defendants, to the bill of complaint of Alvaro B. Graham, complainant.

The defendants now and at all times saving and reserving unto themselves all and all manner of benefit and advantage of excep-

tion which can or may be taken to the many errors, uncertainties, and other imperfections of the said complainant's said bill of complaint, for answer thereto, or to so much and such parts thereof as these defendants are advised it is material or necessary for them to make answer unto, answering, say—

That they have no knowledge and claim no interest in any of the patents mentioned and referred to in said bill of complaint, excepting patent No. 67041, granted to the said complainant and William B. Werden and Cyrus A. Werden, as assignees of the said complainant, under date of July 23rd, A. D. 1867, and as to all the allegations of said bill respecting the issuing of such other patents, the assignment and transfer thereof, and operations thereunder these defendants have no knowledge or information and cannot answer the same, upon belief or otherwise, but leave the said complainant to make proof thereof as he may be advised is proper.

420 These defendants, further answering, admit, upon information and belief, that the letters patent of the United States were granted on the 23rd day of July, 1867, to the said complainant and William B. Werden and Cyrus A. Werden, as assignees of the said complainant, for a certain machine or improvements in mowing machines known by the name of the Champion machine, and these defendants, upon like information and belief, also admit that the devices named and covered by the said patent were or were claimed to be the inventions of the said complainant.

But as to the particular terms upon which the said complainant gave and transferred to the said William B. and Cyrus A. Werden an interest in the said patent or in the said patented invention these defendants have no knowledge or information and cannot answer, upon belief or otherwise, and leave the complainant to make proof thereof as he may be advised is proper.

These defendants admit that the patent so granted to the said complainant and the said Werden is the one referred to in
421 the said bill of complaint as number 67041, of the date of July 23rd, 1867.

The defendants, further answering, say that they are, and for many years have been, manufacturers of harvesting machines under the firm and name and style of C. H. and L. J. McCormick, doing business in the city of Chicago, in the county of Cook aforesaid; that as such manufacturers of harvesting machines they have been and still are interested in the patents and improvements relating to the said business, and that they have been at all times desirous of securing, by purchase or otherwise, the right to use inventions and improvements relating to the operation of harvesting machines; that in the due course of their business the said patent number 67041 came under their observation as a patent relating to such machines; that for many years these defendants have purchased patents or the right to use the patents relating to said business whenever the same promised or seemed to promise any improvement upon the machines manufactured by them, in order that they

might be able to offer to the public the best harvesting ma-
422 chine of the kind manufactured by them in the existing state of the art; that in so doing they have purchased and paid for many patents or the right to use patents wholly worthless in themselves and which could not be and have not been made valuable for any useful purpose in the manufacture of machines constructed by them.

These defendants, further answering, say that Charles Colahan, mentioned in said bill of complaint, has been for several years last past employed by them for the purpose of ascertaining the patents granted by the United States having relation to the harvesting machines manufactured by them.

To investigate the merits of the invention sought to be covered by such patents and to make purchase of such patents or rights under the same, that the said Charles Colahan, acting for and on behalf of these defendants, on the 27th day of April, 1878, purchased from the said Cyrus A. Werden and William B. Werden a shop right under said patent of July 23rd, 1867, numbered 67041 aforesaid, and paid therefor to the said Werdens the sum of $50; that at the time of the said purchase the said Charles
423 Colahan and the said Cyrus A. and William B. Werden entered into an agreement in writing, of date of April 27th, 1878, in and by which, after setting forth the sale and purchase of the shop right aforesaid, it was further provided and agreed that, should the said Werdens within thirty days from the date thereof offer and be prepared to sell and transfer unto said Colahan the full and exclusive right in the said invention and patent for $150, in addition to the amount paid for such shop right, and the said Colahan should accept and pay the said amount, the said Colahan should own all of said patent, and, if said Colahan should refuse such offer for the whole of said invention, then said shop right should be void, as by the said agreement bearing date the day and year aforesaid, referred to in said bill of complaint, will more fully and at large appear, and a copy of which said agreement is hereto attached, marked Exhibit A, and made a part of this answer.

These defendants, further answering, upon information and
424 belief, state it to be true that the said Werdens did not offer and were not prepared to sell unto said Colahan the full and exclusive right in said invention and patent within the time mentioned in said agreement, and signified to said Colahan their inability so to do, although the said Colahan was ready and willing at any and all times within the time therein limited to receive and pay for the same; that by reason of the said failure of the said Werdens the sale of the said shop right aforesaid became absolute and vested in the said Colahan, his heirs, assigns, and legal representatives, the right to use the said patented invention in accordance with the terms of the sale and conveyance aforesaid.

These defendants, further answering, say that the said Charles Colahan afterwards and on the 27th day of April, 1878, sold and conveyed to these defendants, by the firm name and style of C. H.

and L. J. McCormick, all his right, title, and interest in and to the said letters patent number 67041, and evidenced the same by an instrument in writing of the date last aforesaid, a copy of
425 which is hereto attached, marked Exhibit B, and made a part of this answer.

These defendants, further answering, state it to be true that neither the said Colahan, at the time of his purchase aforesaid from the said Werdens, nor these defendants, or either of them, had any knowledge or notice of any of the matters alleged in said bill of complaint or any other matter or thing in any manner impeaching the right of the said Werdens to grant to said Colahan the shop right mentioned in said conveyance made by them to said Colahan on the 27th day of April, 1878, aforesaid, nor had these defendants, or either of them, or the said Colahan any knowledge or notice of any private arrangement or understanding between the said complainant and the said Werdens by or under which the rights of the said Werdens in and to the said letters patent number 67041 were or could be in any manner impaired or questioned as the same appeared to be in and by the said letters patent; that these defendants and the said Colahan relied upon the record title of the said patent in making the said purchase and upon the right and authority
426 of the said Werdens, as joint owners with the said Graham in said invention, to grant licenses for the use thereof; and they further state and insist that they are purchasers of the said shop right for good and valuable considerations from the said William B. and Cyrus A. Werden without knowledge or notice of any matter or thing in the said bill of complaint alleged tending to detract from the right of the said Werdens to make good sale and conveyance of said shop right, as hereinbefore set forth, and they claim the benefit of the said purchase, under the conditions aforesaid, upon the hearing of this cause, in the same manner and to the same extent as though they had specially pleaded the same in bar to the relief sought in and by the said bill of complaint.

These defendants, further answering, deny all and all manner of fraud, combination, and confederacy with which they are charged in and by the said bill of complaint, and any and all knowledge, information, and relief as to any other matters and things in
427 the said bill set forth, as herein specially set forth, stated, and referred to; and, having fully answered, they pray to be hence dismissed with their reasonable costs by them about their suit in this behalf most wrongfully sustained, &c.

CYRUS H. McCORMICK,
LEANDER J. McCORMICK,
By JNO. N. JEWETT, *Their Att'y.*

JNO. N. JEWETT, *Sol's & of Counsel for the McCormicks.*

"EXHIBIT A."

WAUKEGAN, ILLS., *Ap'l* 27, '78.

This memorandum of agreement, made between Chas. Colahan, of Cleveland, Ohio, and W. B. Werden and Cyrus — and A. B. Graham, of Waukegan, Ill., witness-:

The said Werdens, being the owners of an interest in the invention of said A. B. Graham, do hereby sell and assign to said Chas. Colahan, his heirs, assigns, and legal representatives, one shop right to manufacture the said invention, and also as shown and described in patent No. 67042, dated July 23d, 1867, for the full term
428 of *of* said patent of said A. B. Graham, for the sum of fifty dollars, the receipt of which is hereby acknowledged; and it is further agreed that should said Werdens within thirty days from date hereof offer and be prepared, by virtue of their ownership in said invention, to sell and transfer to said Colahan the full and exclusive right in said invention and patent for one hundred and fifty dollars, in addition to the am't paid for said shop right, and the said Colahan shall accept and pay the said am't, the said Colahan shall own all, or if said Colahan should refuse to accept said offer for the whole of said invention as above, then said shop right shall be void.

(Signed) WM. B. WERDEN.
CYRUS A. WERDEN,
By W. B. WERDEN,
His Att'y-in-Fact.
CHAS. COLAHAN.

Witness:
F. H. WERDEN.

"EXHIBIT B."

Whereas A. B. Graham did make certain improvements in
429 harvesters, and a patent was issued by the United States bearing date — 23d, '67, and numbered 67041, and said patent was issued to said A. B. Graham and W. B. Werden and Cyrus Werden, of Waukegan, Ills.; and whereas said W. B. Werden did assign and sell for himself and the said Cyrus Werden one shop right in said invention and patent, as therein shown & described, unto Chas. Colahan, of Cleveland, Ohio, and unto his assigns & legal representatives; and whereas Messrs. C. H. & L. J. McCormick, of Chicago, Ill., are desirous of owning and using said shop right:

Now, this indenture witnesseth: That, for and in consideration of fifty dollars paid to —, the receipt of which is hereby acknowledged, —, the said Chas. Colahan, do hereby sell, assign, and set over to said McCormick all my right, title, and interest in said patent as acquired by virtue of a certain agreement & purchase of said Werden, dated April 27, 1878.

Chicago, Ill., April 29, 1878.

(Signed) CHAS. COLAHAN.

430 Endorsed: Filed this 15 day of October, 1879. Jno. J. Healey, clerk.

STATE OF ILLINOIS, }
County of Cook, } ss:

I, Frederick C. Hale, a notary public in and for said county, do hereby certify that the writing contained on the fifteen (15) proceeding leaves of paper is a full, true, and exact copy of the bill of complaint and of the answer of Cyrus H. McCormick and Leander J. McCormick thereto in the suit now pending in the superior court of said county, in which Alvaro B. Graham is the complainant and William B. Werden, Cyrus A. Werden, Cyrus H. McCormick, and Leander J. McCormick are defendants.

I have carefully compared said copies with the originals now on file in said suit.

In testimony whereof I have hereunto set my hand and notarial seal this 30th day of October, A. D. 1879.

[SEAL.] FRED. C. HALE,
Notary Public.

431 UNITED STATES OF AMERICA,
Northern District of Illinois:

I, Frederick C. Hale, a notary public within and for the county of Cook and State of Illinois, residing at Chicago, in said State and district, do hereby certify that the foregoing depositions of Alvaro B. Graham (recalled), Samuel I. Bradbury, and James B. Welch were taken before and by me, by agreement of parties, on the 21st and 25th days of October and the 5th and 7th days of November, 1879, at the office of Messrs. Banning & Banning, in Chicago; that each of the said witnesses was by me duly sworn to testify the truth, the whole truth, and nothing but the truth in said cause, and his deposition was by me reduced to writing by questions and answers, and read over to the witnesses and subscribed by him as and for his deposition in said cause in my presence and in the presence of counsel for the respective parties, as appears noted in the foregoing manuscript pages.

432 I further certify that the parties, complainant and defendants, were represented at the taking of the said depositions; the complainant by Messrs. Banning & Banning and the defendants by C. K. Offield, Esq.

In testimony whereof I have hereunto set my hand and official seal this 8th day of November, A. D. 1879.

[SEAL.] FRED. C. HALE,
Notary Public.

Fees for taking foregoing depositions paid by complainant's solicitor.

Endorsed: Filed Nov. 10, 1879. Wm. H. Bradley, cl'k.

433 In the Circuit Court of the United States for the Northern District of Illinois. In Chancery.

HUGH GRAHAM, Complainant,

vs.

CYRUS H. MCCORMICK *et al.*, Defendants.

Testimony taken before Henry W. Bishop, master in chancery of said court, this day, the 24th day of October, A. D. 1882.

Present: Ephraim Banning, Esq., of counsel for complainant, and George Harding and John R. Bennett, Esqrs., of counsel for defendants.

Mr. BANNING: In accordance with the understanding heretofore existing, I now request counsel for defendants to produce a statement showing the number of machines manufactured and sold by them coming within the decision of the court in this case, the amount of profits received by them on such machines, &c.

Mr. Harding, counsel for defendant, produces statement of the number of machines and the amount of profits, prepared by Mr. William J. Hanna, now present, and notes that in addition
434 to the expense there is an item of $57,777.50, paid for royalties to other patentees, which is noted at the foot of the statement, and there was $75,000 paid to Wheeler and others for infringements of patents.

Mr. BANNING: The last statement is objected to, because it is not in evidence yet, and I do not know whether it will or will not be material when proved.

This statement here produced by Mr. Harding is as follows:

Statement of the Profits Growing out of the Manufacture and Sale of Sundry Mowing Machines, Both Plain and Combined, by C. H. & L. J. McCormick, said Machines Being Involved in the Graham Suit.

Gross Proceeds Sales, in Cash and Notes.

	Plain mo.	Comb. mo.	Total.			
Sales, 1874	1,284	-------	1,284	@ $105 53	$135,500 52	
1875	2,365	2,896	5,261	96 61	508,265 21	
1876	2,166	2,931	5,097	93 16	474,836 52	
1877	2,072	2,062	4,134	82 14	339,566 76	
1878	2,062	1,979	4,041	77 11	311,601 51	
1879	987	1,524	2,511	68 64	172,355 04	
	539	571	1,110	Net, 20 23	22,455 30	
	11,475	11,963	23,438		1,964,580 86	
Two-thirds of $1,942,125.56 being in farmers' notes, running 1, 2, 3, and 4 years, more or less, on which a loss of 10 % was sustained in discounts, compromises, & bad debts; ⅔ is $1,294,750.38, and 10 %					129,475 03	1,835,105 82
Cost of manufacturing:						
Made in 1874	1,789	-------	1,789	@ $72 56	$129,809 84	
1875	2,501	3,123	5,624	61 28	344,638 72	
1876	3,623	5,450	9,073	61 36	556,719 28	
1877	1,146	859	2,005	60 81	121,924 05	
1878	2,496	1,612	4,108	42 01	172,577 08	
1879	52	966	1,018	42 00	42,756 00	
	11,607	12,010	23,617			
Cost of selling:						
Sold in 1874	1,284	-------	1,284	@ 19 26	24,729 84	
1875	2,365	2,896	5,261	"	101,326 86	
1876	2,166	2,931	5,097	"	98,168 22	
1877	2,072	2,062	4,134	"	79,620 84	
1878	2,062	1,979	4,041	"	77,829 66	
1879	987	1,524	2,511	"	48,361 86	
"	531	571	1,110	Net.		1,789,462 25
						36,543 58

NOTE.—Amount paid James H. Saxton, royalties on above machines, $57,777.50.

435 *Statement of the Whole Number of Droppers Manufactured and Sold by C. H. & L. J. McCormick in the Years* 1874 *to* 1879, *Both Years Inclusive.*

Year.	Number manufactured.	Number sold.
1874	841	463
1875	632	658
1876	852	505
1877	354	672
1878	776	802
1879	862	748
"	"	414
	4,317	4,262
Less sold at		500
		3,762

Statement produced by the witness Hanna.

436 WILLIAM J. HANNA, having been duly sworn, was examined by Mr. BANNING, and testified as follows:

Q. 1. What position do you occupy in the defendants' office and what position have you occupied during the last 6 or 8 years?

A. It is of a varied character. I attend to a large share of the correspondence, the management in part of the agents. I superintend the shipping and superintend the selling and all the accounts connected therewith—that is, within the last few years. Prior to that I have filled every department, during 34 years, from that of errand boy to that of manager.

Q. 2. Do you know the name of the machine which the court has held to be an infringement of the Graham patent in the case?

A. "The New Advance."

Q. 3. In what different forms has that machine been constructed? I mean whether as a simple mower or combined machine.

437 A. It has been constructed both as a simple, independent mower and also as a mower in connection with the combined machine.

Q. 4. When did you first become familiar with this machine or know that the defendants were manufacturing it?

A. From its inception; from the first, probably; I think the date was 1867 when we began to build what was called "The Advance." It was in various forms. This machine you have reference to was commenced to be built in 1874, what we call "The New Advance." We became acquainted with "The New Advance" in 1874.

Mr. BANNING: As at present advised, the complainant will not claim anything in this suit on account of machines manufactured and sold before 1874.

Q. 5. Were you familiar with its construction in 1874, and have you been familiar with it since that time?

A. Yes.

Q. 6. Do you know whether the defendants have manufactured any other machine than the "New Advance," of the same construction, or whether they have called this machine by any other name?

A. I know most positively there has been no machine of a like construction, nor this machine called by any other name, built since nor before 1874, except those named in that statement. It covers everything.

Q. 7. You made this statement which has been produced and offered in evidence here?

A. Yes.

438 Q. 8. From what did you make it? I mean how and from what did you get the information and figures contained in it?

A. From our books. I made it correctly. As to the number of machines, I got that from our shipping book of each year, which also shows, besides the number shipped, the number left on hand at the works not shipped. As to the cost of manufacturing, I got that from our ledger and other books. As to the proceeds of the sales, I made that up from our sales books, and the other items of information are wholly compiled from data furnished from our books.

Q. 9. Have you examined all the books that would contain information in reference to any of these matters; and, if so, how thoroughly?

A. I have examined all the books that I require to examine in making up this statement, and I have done it as thoroughly as I could.

Q. 10. How did you know what books to examine; from your own knowledge of the books or acquaintance with them or from directions by any of the defendants?

A. From my own knowledge. Of course, in a large office like this we are ready to assist in any case of that kind. I have had to get parties to bring books from the works to me and I have had to go down there, but I did it and it was my work.

Q. 11. You say you examined every book that would give any information in reference to this subject, so far as you know?

439 A. I say I examined every book I was required to examine.

Q. 12. Are there any other books that would give any other information about the subject that you did not examine?

A. There are not.

Q. 13. Are the figures contained in this statement as to the number of machines sold from 1874 to 1879, inclusive, correct?

A. Yes.

Q. 14. In every particular?

A. Yes, sir.

Q. 15. There can be no mistake about it, you are sure?

A. I have said they are correct in every particular. I cannot make it more emphatic than that.

Q. 16. Then the books have been kept in such form that there was no difficulty in getting accurate information, so that you now have no hesitation in saying that your figures are correct?

A. I do not know just what you mean.

Q. 17. Repeated.

A. I did not say there was any difficulty. I said it took a great deal of hard work and a good many days' work. I think our books are admirably kept—with great system—and kept with a view of affording all information.

Q. 18. Please state again what books you examined in making up this statement and give their names.

A. Our shipping books of the various years, our sales books of the various years, and the various ledgers and collection books. I believe that covers all.

440 Q. 19. What was the cost, say, per machine of manufacturing the "Old Advance"—I mean the one you speak of as manufactured from 1867 to 1874?

A. I can't tell you; I was not employed at that sort of work in making up this statement.

Q. 20. Who is James A. Saxton, mentioned in the note at the bottom of the statement?

A. He is a party to whom certain royalties were paid?

Q. 21. Where does he live?

A. I don't know.

Q. 22. What patent does he own or control under which these royalties were paid?

A. I don't know; I didn't pretend to know.

Q. 23. Do you know whether such royalties were actually paid to him or not?

A. Our books show they were paid.

Q. 24. When do the books show they were paid?

A. I can give you the dates and amounts:

In the year 1874	$4,552 50
In the year 1875	15,520
In the year 1877	14,957 50
In the year 1878	22,747 50
Making a total of	$57,777 50

Q. As I understand from this statement, the defendants sold 23,438 machines known as the "New Advance" in the years 1874 to 1879, inclusive?

A. Yes, sir.

Q. 26. Did they manufacture or sell any other machine during those years; and, if so, what?

441 A. They manufactured and sold other machines during those years. I did not come prepared with the figures of how many.

Q. 27. Please give the names of all the other machines they were manufacturing during those years.

A. During the year 1874 there was a large number of the "Old Advance" made. There were some machines also built called the "New Reliable," and some "Droppers," and in the subsequent years the manufacture of the "Harvester" began. In 1875 I believe there were over 5,000 built that year, and "The Dropper" also continued; after that came the "Harvester" and "Binder;" so that during all those years there was a considerable number of other machines built.

Q. 28. You speak of "The Dropper." Was that an attachment put onto other machines?

A. No, sir; it is a machine for reaping grain and laying it by a process called "dropping," without going on the platform. It is dropped in the rear of the machine; simply a plain reaper with this peculiar method of delivering the grain.

Q. 29. Was not this peculiar method of delivering the grain applied to these machines called the "New Advance" or machines like them in construction?

A. No, sir; the method of delivering the grain by the "Advance" was by means of a platform and raking off.

Q. 30. Could you not leave off the self-raking platform and attach this "dropper" to the same machine, no other changes being

442 necessary?

A. When you attempt to make one charge it always involves a great many more.

Q. 31. Excepting that platform and self-raking apparatus, wherein was that machine different in construction from the one you style "New Advance?"

A. It was a wholly different machine.

Q. 32. When did the defendants begin to manufacture the "Prize mower?"

A. I didn't come prepared to answer these questions about other machines, but probably about the year 1865 or 1866.

Q. 33. When did they discontinue it?

A. In 1875, I believe—that is, the manufacture.

Q. 34. This statement only shows the number of machines sold up to and including 1879. Did you examine to see whether the defendants had sold or made any since that date?

A. That wound them all up.

Q. 35. They had none on hand that had been manufactured before that time?

A. None of that kind of machines. If you will observe you will find a few items in 1879; that was the wind up of it.

Q. 36. Are you quite sure that they never made or sold any of these machines after 1879?

A. The defendants went out of business at the end of that year.

Q. 37. And were succeeded by the McCormick Harvesting Machine Company?

443 A. Yes, sir.

Q. 38. This last item of sales in 1879 are all the machines

which the old firm had on hand and which they sold to that company when organized?

A. That is right exactly, and observe it is marked "net."

Q. 39. Has the McCormick Harvesting Machine Company manufactured or sold any of these machines since its organization?

A. I could not answer that; I believe they have manufactured some, but how many I could not answer; I supposed this examination had reference to C. H. and L. J.

Mr. Harding, counsel for defendant, objects to this examination.

Q. 40. Have they been engaged in manufacturing these machines from the time of their organization up to the present time, and are they still engaged in manufacturing them?

Mr. HARDING: Objected to as before.

A. No, sir.

Q. 41. When did they stop?

A. I think in the year 1880. I might say in parenthesis that the "Advance" had lost its prestige for a good many years before, and it was dying a natural death, and therefore in the year 1880 we stopped.

Mr. BANNING: The last part objected to as not responsive to the question.

Q. 42. How many machines, as near as you can state, were sold by the company after its organization?

444 A. Do you mean manufactured and sold?

Q. 43. No; sold.

A. I could not tell; I did not come here posted in that line; I supposed the investigation would cease with the private firm.

Q. 44. Did not the questions and points which were sent General Leggett and which, as we are informed, he sent to your office call for information as to that matter?

A. There was some allusion to the new company in that series of probable questions which would be asked, but I treated that as surplusage; I presumed there would be no question at all grow out of it that I would be called on to answer.

Q. 45. Over what territory were these machines sold, from 1874 on, at retail?

A. It would be much easier to say in what locality they were not sold; the territory would embrace from Virginia to the Territories and from Texas to Northern Minnesota.

Q. 46. Were any of them sold in Canada?

A. Not that I know of.

Q. 47. Any of them shipped to foreign countries?

A. No, sir; I don't think of one. As I have said before, they were not a popular machine to be sent abroad.

Q. 48. How many local agents did the defendants have during those years?

A. It might be probably 5,000; I could not tell you the exact number.

Q. 49. How many traveling agents did you have?

A. You mean general agents, I presume, having territory; we don't keep traveling agents.

445 Q. 50. I mean traveling men of all kinds.

A. Some of these 5,000 are traveling men; you will have to define more particularly what you mean. I will explain. Our business is managed by district agencies and they in turn, while superintending the district, employ the aid of local agents to do the selling. We have somewhere from 45 to 50 of these district agents, and each of them has from 25 to a hundred subsidiary or local agents.

Q. 51. Then, how many agents of all kinds did you have during those years?

A. We will say about 5,000, more or less.

Q. 52. Has not the defendants' business been constantly increasing for the last 15 years or more?

A. Not constantly, but generally; the reason why I make that difference in my phraseology is that from the year 1873 up to the year 1878 we passed through a period of the most disastrous years in my recollection, and I am now 52 years old—the most disastrous for manufacturers and business men generally.

Q. 53. How many men did you employ in your shops during those years?

A. That would vary entirely with the time of year and the years. For instance, one of these years, 1877, we carried so many machines over from the previous year we scarcely built any. I suppose we got pretty near the bottom of things about that time, and there were very few machines built, because a large stock was carried over; therefore the number of men would vary according to the

446 time of year and the year, ranging all the way from a thousand men down. We run from 1,400 to 1,600 men now.

Q. 54. Can you give me a list of your agents in the different parts of the country?

A. I could, but they vary like a kaleidoscope view each year. Sometimes we bounce a man for cause.

Q. 55. I mean a list of those you had from 1874 to 1879, inclusive.

A. I could give you a list of each year, but it would be subject to a good many erasures each year.

Q. 56. Have you got that with you?

A. I have not.

Q. 57. Did not the statement of questions submitted to Gen. Leggett also call for that?

A. It intimated something of that kind might be called for. I suppose that you would see at once the uselessness of anything of the kind and I did not make it. I have been very busy, as you are aware. I can make it at any time. It is only a little manual labor.

Q. 58. Was the machine which you have referred to as a "Dropper" a one-wheeled or a two-wheeled machine?

A. Two-wheeled machine.

Q. 59. Do you know how it provided for the raking?

A. It was a reaper—a fixed arrangement—and did not need a bar to rock.

Q. 60. Was it not so constructed that it could be and was used as a mower of grass?

A. We have subsequently built them, but not in those years. We have subsequently made the "Dropper" within two or
447 three years past, but not in those years. It was a single bar for reaping.

Q. 61. Do you know the machine which has been sold as the "Improved Advance," or was then sold under that name?

A. That was this machine you have reference to—the "New Advance."

Q. 62. What was its name as printed on it—the "New Advance" or "Improved Advance?"

A. We have to give a little taffy every year, to use a vulgarism, when we talk about improvements in our printed matter from year to year. We are making improvements, of course, and therefore the "Improved Advance" was simply from year to year as it was improved. The manufacture began in 1874, and in 1875 it was improved, in 1876 it was improved, and so on each year.

Q. 63. But it was the same machine all the time?

A. The same machine.

Q. 64. What was the difference between the "Prize mower," as manufactured in 1874 and later, and this "Advance" machine we have been considering?

A. They had a family likeness, inasmuch as they were both McCormick mowers. One had a double frame and the other a single frame, and the "Improved Advance" had those features which are considered to be infringements of the Graham and other patents.

Adjourned to 9 o'clock a. m., Wednesday, October 25th.

WEDNESDAY, *Oct.* 25.

Parties met pursuant to adjournment, and the examination of WILLIAM J. HANNA was resumed by Mr. BANNING, as follows:

448 Q. 65. I understood you to say yesterday that the number of machines contained in the statement furnished by you was the number of machines known and sold as the "New Advance;" is that correct?

A. The "New Advance" or the "Improved Advance."

Q. 66. And that number did not include any "Prize mowers," as you said yesterday, as I understood you?

A. There was a "Prize mower," which has been the generic name we gave the mower since it has been built, and it has been applied to them without any distinction up to date, but this number does not include the old mower made with a double frame, which was a different thing altogether from this machine in controversy.

Q. 67. Does it include any of the "Prize mowers" made since 1874?

A. As I said, we used the word "Prize mower" all the way through from 1867 or '8 up to 1878.

Q. 68. The account did not include any "Prize mowers?"

A. There is a column for mowers—that is, the "Prize mower;" there is a list of mowing machines and mowing machines combined and a total column. The first column was the "Prize mower" built with this arragement and nothing else; it includes all the "Prize mowers" built with that arrangement, but does not include the "Prize mowers" built under the old arrangement.

Q. 69. When did you begin to build the "Prize mowers" under the new arrangement, as you term it?

449 A. In 1874.

Q. 70. I also understood you to say yesterday that the "Advance" machine was never used as a "dropper," as you expressed it?

A. Yes, sir; I said so.

Q. 71. This number you report, amounting to twenty-three thousand and over, does not include any "droppers?"

A. No, sir; it does not.

Q. 72. If the "Advance" was used as a "dropper" or if the dropping attachment was put on the "Advance," then there would be an additional number?

A. Yes, sir, but it was not used; neither was the the dropping attachment put on the "Advance."

Q. 72. In the catalogue and price-list of the McCormick Harvesting Machine Company for 1881 I find this heading, "Advance, Mower, and Dropper;" what does that mean if it does not mean that the "Advance" was used with the dropping attachment as well as without it?

A. There is a comma after the word "Advance;" the Advance and then mower and dropper.

Q. 74. The Advance — constructed in two forms, namely, mower and dropper?

A. No, sir. The word "dropper" means a different machine from the "Advance." Here are the schedules alphabetically arranged, which are used in the "Advance" or used in the "Dropper and Mower." We often have repairs and parts, a great many of them that are interchangeable in a great many machines; this is arranged for

450 the use of customers and agents. If we have a certain pinion bolt or casting that we can run through a number of harvesters and mowers and the Advance and the Dropper we do not make patterns for each and schedule them; that wheel pinion or casting, whatever it may be, as scheduled, will fit a great many. You will find often in looking at the list bracket boxes, &c., scheduled to fit various machines for half a dozen years, so that amounts to nothing.

Q. 75. You mean to say that heading refers to three different kinds of machines, one being the "Advance," one the "Mower," and one the "Dropper?"

A. Yes, sir; it refers to three different kinds of machines.

Q. 76. What mower does it refer to?

A. I presume the list will tell which mower these parts are for. The purchaser of repairs is not interested in any technicality any further than knowing what pieces will fit his machines, and this list is got up with that object in view—to systematize and make simple

the repairs. If he had a "Mower" or "Dropper" or "Advance" he will look at the list and find the piece that will fit by the number.

Q. 77. Do you remember in giving your former testimony in this case you stated positively that you were not an expert and did not know that the defendants had ever manufactured any machines like the model of the "Advance," which they themselves produced and which was offered in evidence in the case?

Mr. HARDING: Objected to.

451 A. I remember some question of that kind being put to me. I don't know whether in that phraseology, but I remember the question inquiring whether I was an expert or not, and I remember seeing a very crude model, which did not look like anything to me at all, it was so crude.

Q. 78. Have you examined these or any of them since that time?

A. No, sir.

Q. 79. Have you ever personally had anything to do with the building of the machines?

A. No, sir.

Q. 80. And your only information in reference to their construction is that which you obtained in the office from your position in connection with the books, papers, correspondence, and so on, is it not?

A. Largely so, in connection with my acquaintance with the business generally. I do not pretend to be an expert.

Q. 81. Then would it be inconsistent with any of your statements, as you mean them, that some of these other machines which you seem to consider entirely different from the Advance were substantially the same, and so within the decision in this case?

A. As in my former testimony so I testify now. I do not claim to be an expert. I do not think it at all consistent with my evidence that it would be impossible that any of these machines built would be an infringement of the Graham patent. I make this statement based on my general knowledge of the machines and business and not as an expert.

452 Q. 82. And not on any acquaintance with the machines derived from handling or building them?

A. Certainly not.

Q. 83. At whose instance did you come here to testify?

A. I came here because I was requested to do so by Mr. Harding.

Mr. Bennett, counsel for defendant-, states that the witness was produced here in answer to the call made upon them by counsel for complainant for some one conversant with the facts.

Cross-examination by Mr. BENNETT:

X Q. 84. During the period from 1874 to the present time have you had occasion to examine the "Advance" mower and combined machine included in the account which you have furnished?

A. Several times.

X Q. 85. Have you ever used such machines in the field?

A. Yes, sir.

X Q. 86. Have you ever sold them?

A. Yes, sir.

X Q. 87. You may state whether or not you consider yourself familiar both with the construction and mode of operation of the machine—such as are included in the account you have furnished.

A. Yes, sir; I consider myself perfectly familiar with them.

WILLIAM J. HANNA.

Subscribed and sworn to before me—

H. W. BISHOP,
Master in Chancery of the Circuit Court of the United States for the Northern District of Illinois.

Adjourned to meet by agreement.

453 FEBRUARY 13, 1883.

Said parties met by agreement.

Present: As before.

ALVARO B. GRAHAM, a witness produced, sworn, and examined on the part of the complainant, deposes and testifies as follows in answer to questions by Mr. BANNING:

Q. 1. What is your name?

A. Alvaro B. Graham.

Q. 2. You are the patentee named in letters patent No. 74342, sued on in this case, are you not?

A. Yes, sir.

Q. 3. And the brother of Hugh Graham, the plaintiff?

A. Yes, sir.

Q. 4. State what connection you have had with said patent and with operations under it since you assigned it to the complainant in 1870.

A. I have had the general charge in connection with it—granting licenses under power of attorney from him, and general charge of the litigation; I am thoroughly familiar with everything connected with the licensing and litigation.

Q. 5. Please state on what the complainant has depended for his compensation under said patent since the assignment to him, and on what you depended for compensation before that time.

A. We have depended altogether upon royalties. Before assigning to him, in my earlier operations, I undertook to build up a manufacturing enterprise, which finally failed, up in the fall of 1869. From that time on, until I assigned the patents to him, I undertook the licensing of the patents for use and royalties.

454 Q. 6. Then, as I understand you, both yourself and the complainant have depended entirely for your compensation upon the royalties or moneys collected under the patent since the failure of your manufacturing enterprise, in the early fall of 1869. Is this correct?

A. It is.

Q. 7. State what licenses have been granted under said patent

during the time it was owned by you and since the assignment to the complainant.

A. I granted a license in December, if I remember rightly, 1869, to Amos S. Waterman, and in January following or possibly in February of 1870 Mr. Waterman and myself made an arrangement with Jacob C. Bloom. That license I have not here. In March or April, 1870, I granted a license, which never was put in writing, to the Bloomington Manufacturing Company of Bloomington, Illinois. In November, 1878, my brother granted a license, through me, to the Wayne Agricultural Company of Richmond, Indiana. In September, 1880, he granted a license, through me, to the Ann Arbor Agricultural Company, Ann Arbor, Michigan. In Jan'y, 1881, I think it was, he granted one, through me, to the Geneva Lake Crawford Manufacturing Company, and in June, 1881—I think it was June—he granted one, through me, to the Remington Company of Ilion, New York. In addition to that we have made some few settlements for gross amounts, and some of those settlements provided for a payment of royalties in the future under certain contingencies. I think that is all. I do not remember anything further at present.

Q. 8. Look at these papers now shown you and state what they are, what you know about their execution, and whether the signatures thereto are genuine.

455 A. Those are the papers I referred to in my last answer—licenses, agreements, and powers of attorney—and the signatures are genuine, all except two of them having been executed in my presence. Those two are the Geneva Lake Crawford Co. — and one of the powers of attorney; that I know the signature to. The Geneva Lake Crawford Manufacturing Company license was signed by their secretary, in my presence. I did not see the president sign it. It was taken to Geneva Lake and returned to me by mail. The power of attorney which I did not see signed was dated Jan'y 22, 1881, but I know the signature to be genuine.

Mr. BANNING: I now offer in evidence the following contracts or licenses, identified by the witness and referred to in his last answer:

1. Contract between Alvaro B. Graham and Amos S. Waterman (the witness identifying the signatures), dated Jan'y 29, 1870, and marked Complainant's Exhibit Waterman License.

2. Power of attorney from the complainant to witness, dated Jan'y 9, 1873, and recorded in the Patent Office Feb'y 24, 1873, in Liber M 16, page 243, and the same is marked Complainant's Exhibit Power of Attorney No. 1.

3. Power of attorney from the complainant to witness, dated Jan'y 22, 1881, and recorded in the Patent Office Jan'y 31, 1881, in Liber J 26, page 46 (the signature being identified by the witness), and marked Complainant's Ex. Power of Attorney No. 2.

4. License from the complainant and the witness to the Wayne Agricultural Company, dated Nov. 21, 1878 (signatures being
456 identified by the witness), and marked Complainant's Ex. Wayne Company License.

5. Agreement between the complainant and the witness and the Wayne Agricultural Company, dated Nov. 21, 1878 (signatures being identified by the witness), and the same is marked Complainant's Exhibit Wayne Company Agreement.

6. License to the Ann Arbor Agricultural Co., dated September 10, 1880, marked Complainant's Exhibit Ann Arbor Company License.

7. License to the Geneva Lake Crawford Manufacturing Company, dated Jan'y 27, 1881, and the same is marked Complainant's Exhibit Geneva Lake Company's License.

8. License to the Remington Agricultural Company of Ilion, New York, dated June 13, 1881, and the same is marked Complainant's Exhibit Remington License.

9. Assignment or agreement relating to the claims against the Warrior Mower Company between the Grahams and David H. Burrell, dated Aug. 4, 1881, and the same is marked Complainant's Exhibit Burrell Assignment.

10. Agreement between the Grahams and Albert J. Glass and the Jaynesville Machine Company, dated Jan'y 13th, 1882, and the same is marked Complainant's Exhibit Glass Agreement.

11. Release and license to the Johnston Harvester Company, dated April 11, 1882, and the same is marked Complainant's Exhibit Johnston Release.

457 Mr. BANNING: I wish to make this statement or explanation, that I simply offer some of the above papers, particularly some of the last ones, for the purpose, and only for the purpose, of showing all the contracts or licenses granted by the complainant, so far as the witness has referred to them or produced them, so that the master and court may have full information on the subject.

Q. 9. State whether or not the complainant has any regular royalty or established license fee for the use of the inventions or combinations mentioned and claimed in the first and second claims of the patent sued on, No. 74342; and, if so, what it is.

A. He has such an established license fee, as shown by the various licenses introduced here.

Mr HARDING: Objected to, as the papers show for themselves.

Q. 10. Has he or yourself, as his agent, ever granted any other license or offered to grant any other licenses, so far as you know, at any other rate of royalty or license fee per machine than those mentioned in the foregoing licenses, which refer to a specified rate per machine?

A. He has not, nor we have not.

Q. 11. State whether you have the first agreement between yourself and Mr. Waterman or the subsequent one between yourself and Mr. Waterman and Mr. Bloom, referred to in your previous answer.

A. I have not the first one; that was destroyed at the time of making the second, the one which we have here, and I have not the one with Jacob C. Bloom.

458 Q. 12. State what efforts you have made, if any, to find this latter agreement and whether you know where it is or anything about it.

A. I have searched thoroughly through all papers of my own for that license and have also gone through Mr. Waterman's papers with him and failed to find it there; Mr. Bloom also failed to find it.

Mr. Harding, counsel for defendant-, objects to the statement about Mr. Bloom failing to find it.

A. I don't know where it is.

Q. 13. Is it in your power to produce it or a copy of it or any memorandum of it?

A. It is not.

Q. 14. State, if you remember, what rate per machine was mentioned or agreed on in those two instruments which you say you are not able to produce, and what patents they related to.

Mr. HARDING: Objected to, because the proof of the loss of the original instrument is not proved by the proper party in whose possession such license should be.

A. The rate of royalty was $10 per machine; that conveyed the right to use all of my inventions secured by three patents, the one in controversy being one of the three; the other two are dated April 9, 1869, and March 7, 1868, if my memory serves me properly.

Q. 15. Have you made efforts to procure the agreement from Mr. Bloom?

459 A. I have; I have been to Mr. Bloom a number of times in my efforts to get possession of that instrument; he denies any knowledge of its whereabouts.

Mr. HARDING: The statement of Bloom objected to as hearsay.

Q. 16. You have been unable to find it and get it?

A. I have.

Mr. HARDING: The objection to the form of testimony is continued in reference to this matter; the loss of the license is not properly proved by the party in whose hand it ought to be.

Q. 17. State all the particulars connected with the license or agreement with the Bloomington Agricultural Company, to which you have referred, and particularly what rate of royalty was provided for and what patents it included.

A. The royalty in the Bloomington agreement was for $10 per machine and related to the three patents mentioned in my former answer; it was not in writing; as I have stated, it was an oral agreement.

Q. 18. What was done under the Bloomington agreement?

A. There was fifty machines built under that agreement, if I remember right.

Q. 19. Was the royalty ever paid?

Mr. HARDING: Objected to unless the witness knows of his own knowledge how many machines were built.

A. There was not any royalty paid.

Q. 20. Do you know personally about the building of machines by the Bloomington Company?

A. I do; I helped build them.

Q. 21. Then you were employed by the company?

460 A. Yes, sir.

Q. 22. Were you paid a salary or wages?

A. I was paid wages.

Q. 23. Did the royalty that was to be paid under the patent have anything to do with your position for work or labor in their factory?

A. None whatever.

Q. 24. State why no royalty was ever paid by the Bloomington Company under that agreement.

A. When I called on the company for my royalty they informed me that they had been instructed by old partners of mine of the name of William B. and C. A. Werden, who had discontinued the business of manufacturing under their contract with me in the summer of 1869, that they must not pay me a royalty, and that they claimed an interest in it. I sued the company for my royalty, and the petit jury beat me upon the ground that I had sued before my demand was due.

Mr. HARDING: Objected to as hearsay.

Q. 25. State all the particulars connected with the granting of the license to the Wayne Agricultural Company in 1878.

A. I think, in the winter of 1876 and 1877—I think, perhaps, in December—Mr. L. L. Lawrence, president of the company, sought an interview with me in relation to the Sprague mower, which I at that time had sued, but the suit had not been yet determined. He was desirous of building that mower and wanted to make an arrangement if I gained that suit. In the summer of 1870 he opened

461 up a correspondence with me in relation to it, and I met Mr. Lawrence here by appointment in August, that year, at which time we negotiated in relation to the matter. Mr. Lawrence offered me $3.00 royalty.

Mr. HARDING: Objected to.

I asked him $5.00. He told me at the time that he did not think that his company could be induced to pay more than the three dollars. We separated then, with the understanding that we would meet at the Kansas City fair in the fall. We met there according to our understanding at that time, and closed the trade up at $3.00. I became satisfied I could not do any better, and I closed the trade with him at $3.00 per machine. We then made an appointment for a meeting at their place, in Richmond, Indiana, some time about the middle of October. Subsequently the meeting was arranged to take place here at Chicago. I came on here to Chicago at that time. I was living in Girard, Kansas, and when I got here I got a communication from the company that they had concluded not to deal. I remained here in correspondence with them until late in November, and I went down to their place finally and there closed up the

license that is introduced here in evidence, which was executed on the 21st of November, if I remember right.

Q. 26. Was there any correspondence in reference to the granting of such license; and, if so, who conducted it on your side?

A. There was such correspondence. I arranged with Mr. M. A. Morse, a personal friend of mine and also an acquaintance
462 of Mr. Lawrence, to correspond with that company until the time of our meeting in Kansas City, in the fall. Mr. Morse conducted such correspondence, and I have such correspondence to introduce here if desired.

Q. 27. Were the letters from the company shown to you by Morse at that time?

A. They were. Mr. Morse sent me the correspondence as it occurred, or copies of it, at least.

Q. 28. What statements or promises were made, if any, on behalf of the Wayne Company as to its proceeding with the manufacture of your mowers and building up a trade therein?

A. In that license I granted them exclusive territory as to certain States as to license to sell, and they agreed to supply the demand, or at least to make their best efforts to supply the demand, in that territory, and they insisted that, as it would be some expense to them to introduce the machine and push it, they could not afford to pay me over three dollars and give it the energy it was entitled to.

Mr. Harding, counsel for defendant-, objects to the witness stating what he was told.

Q. 29. Look at this letter now shown you and state if you recognize the writing; and, if so, in whose handwriting it is.

A. I recognize the writing; it is in the handwriting of Mr. William Baxter.

Q. 30. Who is he?

A. He is the corresponding secretary of the Wayne Agricultural Company, or was at that time.

Mr. BANNING: I offer said letter in evidence from the
463 Wayne Agricultural Company to M. A. Morse, dated September 7, 1878, marked Complainant's Exhibit Wayne Company's Letter.

Mr. HARDING: Objected to.

Q. 31. If I understand you, Mr. Lawrence promised, on behalf of his company, that they would endeavor to build up a large business in your mowers, and urged this as a consideration for your reducing your rate and accepting three dollars per machine; is that correct?

Mr. HARDING: Objected to as leading and calling for the statements of Mr. Lawrence.

A. That is correct.

Q. 32. It was on the faith of such promises and of the promises contained in this letter that you made the agreement with them which has been offered in evidence?

Mr. HARDING: Objected to as leading, and the agreement is the best evidence.

A. It certainly was.

Q. 33. State how the clause relating to the coupling pin of your patent, 76436, contained in this Wayne Company license, near its end, came to be inserted, and all about it.

A. After we had got our trade made and Mr. Baxter had got the instrument nearly finished I happened to think of that pin, and it occurred to me I could throw it in there and perhaps get it introduced by its use in that machine, and I said to them they might use that pin, free of cost to them, if they desired; hence he wrote a clause there, near the close of that instrument, giving them the right to use it.

464 Q. 34. Was that matter considered in any of your previous negotiations or any reference made to it before?

Mr. HARDING: Objected to.

A. No, sir.

Q. 35. Had anything ever been said in making or negotiating the terms of the agreement in reference to your patent No. 76436, or any other patent than the one now in controversy?

A. Not that I remember of. I might have mentioned that I had other patents; the negotiations exclusively related to the patent No. 74342.

Q. 36. What machine did the Wayne company tell you they desired to have manufactured and for which they wished a license, a mower or reaper?

A. The machine known as the Sprague mower. The company had what they esteemed a very excellent reaper, known as the "Royce."

Q. 37. Did they desire to manufacture any other machine than a mower, so far as they informed you?

Mr. HARDING: Objected to as calling for hearsay testimony.

A. No, sir.

Q. 38. State whether you afterwards had any difficulty with the Wayne Company on account of any matter connected with the license and agreement referred to; and, if so, what course it took and what final disposition was made of it.

465 A. In December, 1879, I visited their place in relation to this business and I found that they had not done a thing. They gave me as a reason they were so driven with their work on other goods that they hadn't been able to do anything. About a year from that time I called there again and they still were not manufacturing machines. I then revoked their license by serving a notice on them on December 7, 1880. I revoked their license by this notice which I now produce. At that time they were preparing patterns to manufacture a machine known as the "Crawford mower," and they learned that I had gained a decree against the Crawford mower in the Geneva Lake suit, at Milwaukee, and they then insisted on manufacturing that mower under this license. I informed

them if they did I would sue them for an infringement. They proceeded, and in June, I think it was, 1881, I brought suit against them for the infringement. During the taking of our testimony in that suit there was a settlement effected between us, in which they paid me my regular price for what they had manufactured, something like 300 machines, they paid me my regular price at that time and gave me their paper for $4,500, payable in the future, for the future years—a lump settlement for the use of that patent on the Crawford machine, together with a county right from me to them under another patent which I controlled that also covered that mower — the county of Wayne, Indiana. I refer to the Burdick & Leroy
466 patent which describes the Crawford mower. That suit was commenced in the United States circuit court for the district of Indiana, at Indianapolis.

Q. 39. What position did the Wayne Company take in their defense in that case with reference to the license above referred to—that it was in force or not?

A. They set that license up as a defense to my suit, insisting that the license was in force.

Q. 40. Look at these two papers and state what they are.

A. This is a copy of the notice I served on that company on the 7th of December, 1880. That is the one dated December 6, 1880. The other paper you show me is a paper relating to the settlement of the suit with the Wayne Agricultural Company. This is dated Jan'y 13, 1882, and recorded Jan'y 19, 1882, Liber R 27, page 291.

Q. 41. Did you see it signed and know the signatures?

A. Yes, sir; I signed my own and my brother's signatures and I saw L. L. Lawrence sign on their part.

Mr. BANNING: I now offer said two papers in evidence, marked, respectively, Complainant's Exhibit Wayne Company Notice and Complainant's Exhibit Wayne Company Settlement. I also offer in evidence a certified copy of the bill, filed Jan'y 29, 1881, and answer, filed September 5, 1881, in the case of Graham *vs.* Wayne Agricultural Company, in the circuit court of the United States for the district of Indiana, being the bill and answer in the suit referred to by the witness, marked Complainant's Exhibit Wayne Company Suit.

467 Q. 42. State whether you ever obtained any final decree in the suit against the Geneva Lake Company to which you have referred; and, if so, what was finally done with such decree.

A. I did obtain a final decree or judgment, and execution was issued and returned not satisfied, and finally the case was settled between ourselves and that company. The judgment in that case was for a fraction over $5,000—I forget just the exact amount—and during the accounting we granted them a license at the regular rate, they paying money in advance for that license, and we finally settled with them, after we discovered their insolvency, for a trifle less than $3,000, if I remember correctly. I could not give you the exact figures. I can, however, by referring to the memorandum. They

paid me something less than $3,000, together with the right of the State of Indiana in the Burdick and Leroy patent.

Q. 43. Gave you an assignment of their patent?

A. Yes, sir; the Burdick and Leroy patent for the State of Indiana. The assignment was taken in another name.

Q. 44. What was the condition of the Geneva Lake Crawford Manufacturing Company at the time that settlement was made?

A. I suppose they were bankrupt. The execution was returned not satisfied—no property found. I saw a notice in the daily papers a few days previous to the serving of the execution of a sale of their entire effects under the hammer at sheriff's sale. The amount was something like $40,000.

Mr. HARDING: Objected to.

468 Q. 45. Have they had any existence or been doing business since that time, so far as you know? State what you know about it.

A. They have not. The works have been run since that time by ——, and the license granted to them was transferred afterwards to the John Haskins Manufacturing Company, as I am informed.

Q. 46. Then the license which has been offered in evidence here to the Geneva Lake Crawford Manufacturing Co. is now held by the John Haskins Manufacturing Company as its assignee; is that correct?

A. Yes, sir.

Q. 47. Do you remember whether the defendants in this suit ever had anything to do with the Geneva Lake Crawford Manufacturing Company at Milwaukee?

A. I believe they had. I think they petitioned the court at Milwaukee, after our case had been submitted, to reopen the case and allow them to come in and reargue it, through their counsel, charging fraud or collusion or something of the kind in the Geneva Lake case as between the parties.

Mr. HARDING: Objected to.

Q. 47½. Did you afterwards and after the decision at Milwaukee give the defendant- any notice of any further proceedings, particularly proceedings before the master in such suit; and, if so, what notice?

Mr. HARDING: Objected to as immaterial.

A. I did. I notified them by letters, which, if I remember
469 rightly, I placed in the hands of C. H. McCormick, Jr., personally. I think that is the way I served that notice. I delivered it to the defendants' office personally.

Q. 48. Have you a copy of the letter so delivered to the defendant-? If so, please produce it.

Mr. HARDING: Objected to as immaterial.

A. I have a letter-press copy of the letter, which I produce.

Q. 49. State the special reasons or occasions which led to the delivering of this letter to the defendants.

A. It was occasioned by these defendants having in an earlier stage of the proceedings, as stated before in the case at Milwaukee, filed a petition in that court to be heard, and it was in view of that we thought it was right and proper to give them an opportunity to appear in this stage of the proceedings if they so desired, the court there having refused to entertain their motion or petition to be heard.

Mr. Banning offers said letter in evidence and the same is marked Complainant's Exhibit Banning's Letter. I also offer in evidence a certified copy of the master's report, exceptions to the master's report, decree and opinion of Judge Dyer in the suit of Graham *vs.* Geneva Lake Crawford Manufacturing Company, in the circuit court of the United States for the eastern district of Wisconsin, and the same is marked Complainant's Exhibit Geneva Lake Suit.

Mr. HARDING: Objected to as immaterial and irrelevant.

470 Q. 50. State all the particulars connected with the making of this agreement of August 4, 1881, with David H. Burrell.

A. We had lost a suit pending against the Warrior Mower Company, and Mr. Burrell, of Litttle Falls, came here and wanted to compromise or buy the claim; the reason he gave was this: that the president of that company was his father-in-law and he was in very poor health and a man that was easily worried over matters of that kind, and they were exceedingly anxious to do something with it to relieve the old gentleman of the annoyance, and we finally made the trade with him. I transferred the claim to him to do what he pleased with, under certain restrictions, for the sum of $12,000. The papers show all of the agreement between us.

Q. 51. What was the condition of that suit, particularly with reference to the questions of infringement, or at least what did you understand about the advice that had been given to the defendants on that question?

Mr. HARDING: Objected to as calling for hearsay testimony.

A. I understood they were advised they had a clear case on the question of infringement—a clear defense. The machine had never been passed on; that was the first suit brought against that machine. The instrument shows the entire agreement and understanding.

Q. 52. State the particulars connected with the Johnston harvester settlement, briefly.

A. We had a suit pending against the Johnson Harvester Company, and one of their officers—I think it was their president; I
471 cannot tell his name—came on here and wanted to effect a settlement; there was a good deal of question about the infringement of the machine, even in our own household, for that matter, and we finally settled that case for the sum of $10,000; it was a lump settlement.

Mr. HARDING: Objected to as hearsay.

Q. 53. State the particulars connected with the Glass agreement, briefly.

A. Mr. Glass came to me—he was an old friend of mine—and stated he was about to leave Chicago and engage in manufacturing reapers and mowers at Jaynesville, Wisconsin, and they were getting up a new machine up there, and they might possibly run against our claim and they might not, but to avoid any difficulty in the future he was desirous of making an arrangement with us that would allow him to use one or both of these claims in that mower if they happened to strike it. He offered me $500 for such a license, and as our patent was nearly expired, had only a short time to run, and there was uncertainty of their getting near enough to make them liable, I concluded to trade with him, and I made such a trade with him as the papers in that particular show, which are here in evidence.

Q. 54. State briefly the particulars of the Remington settlement.

A. We had a suit against them for the infringement of this patent by the manufacture and sale of the Crawford mower, the same machine that was in controversy at Milwaukee, and when the Milwaukee or Geneva Lake case was finally brought to a close they
472 came forward and settled with us and took a license for the future at regular rates. They settled with me for the number of machines they had manufactured up to that time and paid me, at the rate of $3.00 a machine, the sum of $4,050 and took a license for the future manufacture of machines at the regular rates.

Mr. HARDING: Objected to.

Q. 55. Had you previously made a settlement or arrangement with them?

A. I had, in April, 1873. They had been manufacturing a machine called the "Sherwood." It was the duplicate of the Sprague mower. They had learned before I saw them they were considered liable under this patent. I was at that time negotiating with the Spragues at Providence in relation to a settlement. They, the Remingtons, had made a few machines; I don't know how many. They paid me at that time $500. They had discontinued making the machines at the time I met them. They paid me $500 for what they had made.

Q. 56. Are these licenses which you have referred to all that have ever been granted under said patent No. 74342?

A. I think they are all the licenses granted. We granted a release to Gammon & Deering for the infringement of patent 74342 by the sale of the Sprague mowing machine. This was after the decree of court. The matter was settled while before the master in the accounting. I don't now call to mind any other transaction. They reported about 1,392 machines after the decree, and they paid $2,650 for all matters involved in that litigation.

473 Q. 57. State whether the arrangements with Gammon & Deering or the Johnston Harvester Company or Burrell or Glass were made at any specific rate or on the basis of any royalty license fee per machine; and, if not, state fully all the circumstances and facts connected with such arrangements not already stated.

Mr. HARDING: Objected to, as the agreement speaks for itself.

A. They were not made at any special rate. It was a general lump agreement. I never knew how many machines they, either of them, had made or expected to make. I was in need of funds, and there was some questions that I have mentioned in a former answer that had some weight in the matter, and for those reasons I concluded to accept the amounts mentioned in each one of those settlements without any regard to the number of machines or the rate per machine.

Q. 58. State what counsel were representing the defendants in the several suits against the Remingtons, the Warrior or Mower Company, and the Johnston Harvester Company.

Mr. HARDING: Objected to as immaterial.

A. I was informed that Mr. Dickerson, of New York, who was also attorney and one of the counsel for the defendants in this case, was counsel for some of those parties—I think, the Warrior—and I understood, also, that the present counsel in this case were counsel in some of the other cases—I think, in the Johnston case—and General Leggett was of counsel for the Remingtons. I felt
474 that I had had about all of this kind of a fight that I cared for with these defendants, in a case directly their own, without being fought by them in various other suits; in fact, I was informed in one of those cases—the Johnston case—that it could be carried on at the expense of those defendants.

Mr. HARDING: Objected to as hearsay and immaterial.

Q. 59. What claims of the patent now in suit and of your other patents relate to movers?

A. Claims 1 and 2 of the patent of February 11, 1868, the one in suit, and I cannot give you the number of the claim, but the Wayne Agricultural Company's paper shows the number and description of the patent as to the coupling pin—that is, applicable to a mower or reaper. The balance of the claims in my patents are mainly on reaping attachments for grain.

Q. 60. What is the value and importance of these first and second claims of the patent in suit as compared with all your other claims?

Mr. HARDING: Objected to.

A. I have always considered them of pretty much the entire value.

Q. 61. Do you mean they are more important than all the other claims together?

Mr. HARDING: Objected to as leading.

A. I do.

Q. 62. What styles of machines have been contemplated and manufactured under the licenses which you have referred to as granted under this patent—mowers or reapers?

Mr. HARDING: Objected to.

475 A. Mowers exclusively.

Q. 63. Look at this patent, No. 193,770, and state what machine it shows or describes, if you know.

A. It shows and describes a machine manufactured by these defendants—the machine now in suit.

Q. 64. Do you mean the machine manufactured by the defendants which the court has held to be an infringement of your first and second claims?

A. Yes; it is pretty near as accurate as a photograph, so far as the drawings are concerned.

Mr. BANNING: I now offer in evidence a certified copy of said patent No. 193,770, granted to C. H. and L. J. McCormick July 31, 1877, and the same is marked Complainant's Exhibit McCormick's Patent.

I also offer in evidence a copy of the file wrapper and contents of said patent No. 193,770, and the same is marked Complainant's Exhibit Files of McCormick's Patent.

Mr. HARDING: Objected to as immaterial.

Cross-examination by Mr. HARDING:

X Q. 65. Who is Mr. M. A. Morse?

A. He is a gentleman in Chicago, for several years the Western manager or one of the Western managers of the Gibbs & Sterritt Manufacturing Company of Pennsylvania.

X Q. 66. Had he any connection with the Wayne Agricultural Company?

476 A. None whatever.

X Q. 67. How did he come to take part in the negotiations between you and the Wayne Company?

A. By my solicitation.

X Q. 68. He was your agent?

A. In a sense; yes, sir.

X Q. 69. I observe in the correspondence that he urged the building of the Sprague mower by the Wayne Agricultural Company; do you know why he did this?

A. The urging that you speak of occurred after the trade had been orally consummated between myself and their president, at Kansas City, as I have stated, and before the time that it was to be finally reduced to writing, in October following. A portion of their board—a majority of their board, in fact—all at once, for some unknown reason to me, took it into their heads that they would not, did not wish to, engage in it, or so reported to us. The early portion of the correspondence was as a pressure to get that company to pay us five dollars instead of three, and under that pressure for five dollars they took the other shoot and drew off from paying anything or manufacturing the machine in any manner.

X Q. 70. Had the board formally agreed to any contract with you at the time the agreement was made?

A. Only through this correspondence. Here is a letter from their corresponding secretary, which we have produced, which says their

board will not pay more than three dollars, and thinks
477 that is all they can afford to pay and work up the business.

X Q. 71. I understand through Mr. Morse you tried to get five dollars, and the secretary and board would not pay more than three; is that a fact?

A. Yes, sir.

X Q. 72. That was an oral arrangement prior to the time of its being reduced to writing?

A. No, sir; at Kansas City I met Mr. Lawrence, their president, I think in September, 1870. We met there by agreement, the agreement having been arranged here that he would meet me there at the time and consummate it.

X Q. 73. You met him there; what then?

A. Please let me state it as I wish to. We there consummated the agreement orally at $3.00 and made an arrangement for me to go to their works about the 15th of October following.

X Q. 74. What did you go there for?

A. To close it up.

X Q. 75. When you got there did you close it up?

A. I did not get there, however, until about the 17th or 18th of November. As I have stated before, the arrangement was changed as to that meeting, and we were to meet here.

X Q. 76. You got there in November and closed up this agreement, did you?

A. Yes.

X Q. 77. What machine did you understand they were to build at the time you closed the agreement?

478 A. The Sprague machine; that is the machine they saw.

X Q. 78 What machines did you understand they were to build at that time?

A. The Sprague mower.

X Q. 79. I observe in their letters they say they had some doubts about taking hold of and introducing the machine; did they allude to the Sprague?

A. Yes.

X Q. 80. Was it not a doubt about the success of the Sprague machine that induced them to hesitate? Look at the letters, unless you recollect.

A. I could not say as to that.

X Q. 81. Did they not so state in their letters that you produce here?

A. I presume they might; they stated they had some doubt about the introduction of the machine.

X Q. 82. It was this doubt about the success of the introduction of the Sprague machine that made them hesitate, was it not?

A. No, sir; what I understood to be their hesitation was to make terms; that was my understanding and estimation at the time.

X Q. 83. Did they not state in these letters that some of the board were doubtful about the success of the machine?

A. Yes.

X Q. 84. Was not that assigned in the letter as a reason for hesitating to consummate the agreement?

479 A. They stated some of the board were doubtful about the policy of changing from the machine they were manufacturing to the Sprague mower.

X Q. 85. Did they not state the objections to the board to doing that was the cause of the delay in accepting the proposition?

A. Substantially stated that some of the board objected to the change; hence the delay.

X Q. 86. Did Morse urge the Sprague upon them in the correspondence as a good machine?

A. Yes; he did.

X Q. 87. Did he offer to get them a pattern machine of it?

A. I think he did.

X Q. 88. Then did you understand they were to have the exclusive right in these States you mention to use your patented improvement?

A. That was my understanding, provided they fulfilled their agreement.

X Q. 89. Then you knew they were going to build the Sprague mower?

A. I knew that was the intention.

X Q. 90. And, knowing that fact, you voluntarily closed an agreement with them that they should have the exclusive right in the several States you have mentioned, under your patent of 1886, for the sum of three dollars a machine?

A. To the extent of my patent of those two claims; I did not propose to guarantee them.

480 X Q. 91. You made this agreement what year?

A. This agreement was made on the 21st of November, 1878.

X Q. 92. Now, have you kept accounts of the returns of your machine and the royalties in any way?

A. I have kept it in my head and correspondence.

X Q. 93. Have you kept any accounts except in your head?

A. Nothing except correspondence.

X Q. 94. Any regular books or memorandum kept by you and the parties interested with you in this patent which show the returns and receipts of each year?

A. Yes; I think I can furnish accounts.

X Q. 95. Where is the book?

A. At my counsel's office.

X Q. 96. Will you go and bring those books here?

Mr. BANNING: Please state what kind of a book you refer to.

Mr. HARDING: Please bring the books referred to in your last answer.

A. I stated those are not my books; they are not within my control.

X Q. 97. Whose books are they?

A. My attorney's books.

Mr. Harding requests the production of the books referred to by the witness in the last answer.

Mr. BANNING: I have no objection to showing fully all the accounts relating to Mr. Graham's matters contained in our
481 books, but as the books containing such accounts do not show merely what has been paid to him from manufacturers—in fact, do not show any payments to him that have not come through our office—and as they further show our private accounts with all or many of our clients, I submit they are not proper books for the gentlemen to inquire into, and I decline to produce them unless the master so requests. I, however, have no objection to making a complete statement of everything relating to Mr. Graham's matters, and producing that if so desired and it should be considered material, but, as I understand, Mr. Graham has facts in his possession from which he can give everything inquired about, namely, the amounts paid to him by manufacturers, etc.

X Q. 98. Are the books to which you allude in your last answer kept by you or kept by counsel?

A. They are kept by my counsel; they are not my books at all.

X Q. 99. How long has your counsel kept account of the returns of machines and the collections?

A. I think the first entry of that description occurred some time in the summer of 1877, I think possibly in July or June, and from that time to the present.

X Q. 100. Have you kept any books or memoranda yourself of the returns of the number of machines and the amounts received?

482 A. I have not, beyond what was kept in the instruments that are produced here in evidence.

X Q. 101. Then, from the time you started in this business of attending to collections and granting licenses up to the present time, I understand you to say distinctly no books have been kept excepting those which your counsel has kept; is that so?

A. That is what I have stated, and those have not been kept for me or by me.

Counsel for defendant- objects to the latter part of the answer as not responsive.

X Q. 102. What year did you first commence taking charge of the business of collecting royalties under these patents that have been referred to by you?

A. From the date of the patents.

X Q. 103. That was in the year 1860?

A. That was in the year 1868, and all the royalties that have been collected or attempted I have had charge of.

X Q. 104. In the year 1868 what royalties did you collect?

A. I did not collect any in 1868.

X Q. 105. In the year 1869 what royalties did you collect?

A. Not any.

X Q. 106. In the year 1870 what royalties did you collect?

A. Not any.

X Q. 107. In 1871 did you collect any royalties?

A. Not any.

X Q. 108. In 1872 did you collect any royalties?

483 A. No, sir.

X Q. 109. In 1873 did you collect any royalties?

A. In 1873 I collected $500 from the Remington Company, in the month of April, in the way of a lump settlement for machines they had made previous to that, but they had discontinued their manufacture. That same year I collected $500 from Mr. Bloom under this contract I have mentioned here as the Bloom contract; that we have not been able to find or produce.

X Q. 110. When you made the collection of the Remington Company did you call to see them?

A. Yes.

X Q. 111. Did you ask them how many machines they had made?

A. Yes.

X Q. 112. How many did they tell you they had made?

A. They told me they had made towards 100; could not tell exactly without some trouble, but they had made towards 100 machines.

X Q. 113. Did you take any means to satisfy yourself how many they had made?

A. I did not, beyond their statement; I presumed they were honest, straightforward gentlemen and I took their word for it.

X Q. 114. Did they discontinue the manufacture?

A. They had discontinued before I saw them, and had commenced the manufacture of the Crawford mower under the Burdick & Le Roy patent.

X Q. 115. Who owned the Burdick patent at that time for the territory where they were making them?

A. I could not tell.

X Q. 116. Did you call on Jacob C. Bloom?

484 A. I did.

— Q. 117. Did you find out how many machines he had made?

A. He hadn't made any. He paid me $500 as a payment under the contract, which provided that they should pay me a certain amount of royalty whether they should manufacture machines or not. I had a clause of that description in the agreement as a sort of spur.

X Q. 118. Did the Bloom people discontinue then?

A. They never built a machine.

X Q. 119. Before or after?

A. Before nor after.

X Q. 120. In 1874 what royalties did you collect?

A. Didn't collect any royalties that I remember of.

X Q. 121. In 1875 what royalties did you collect?

A. I don't remember of anything in 1875 or 1876.

X Q. 122. In 1877 what royalties did you collect?

A. In 1877 I collected the amount mentioned in the previous answer from Gammon & Deering.

X Q. 123. State what it was.

A. I think it is $2,650; I think that is the amount.

X Q. 124. How many machines did they make and return for having sold?

A. That I could not state of my own knowledge.

X Q. 125. Haven't you heard your counsel state here?

A. Yes, sir.

X Q. 126. What did he state it to be?

A. 1,392, I think.

X Q. 127. What year was that?

485 A. That was in 1877.

X Q. 128. What royalties did you collect in 1878?

A. I don't think I collected any royalties in 1878.

X Q. 129. What royalties did you collect in 1879?

A. Nothing in 1879 that I recollect.

X Q. 130. What royalties did you collect in 1880?

A. In 1881, $90.00 from the Ann Arbor Agricultural Company.

X Q. 131. On how many machines was this $90.00 paid?

A. Thirty.

X Q. 132. How much royalty did you collect in 1881 under these patents?

A. In 1881 I collected $42.50; that was from the Geneva Lake Company; $200 for, I think, 66 machines (it was three dollars a machine) and the Remington instrument; it shows for itself; $40.50.

X Q. 133. At the time you collected this amount from the Reming Company did you call on them?

A. Yes, sir.

X Q. 134. Did you inquire how many machines they had made?

A. Yes.

X Q. 135. During how long a period did you inquire?

A. From 1873.

X Q. 136. You called on the Remington Company in 1881

486 and inquired how many machines they had made between 1873 and 1881; is that so?

A. That is the way I understand it.

X Q. 137. Did you examine their books to see how many they had made?

A. I did not.

X Q. 138. Did you take any means to find out?

A. I took their word for it, as I have said before.

X Q. 139. Did you call on the Remington Company between the years 1873 and 1881 for their royalties?

—. I did not. I had no authority, except word of mouth, to call.

X Q. 140. Who had charge of collecting these royalties between 1873 and 1881 for the owner of the patent?

A. I had.

X Q. 141. Under the exercise of that authority why did you not call on the Remington people between 1873 and 1881 for the machines they had made?

A. I called on them by that suit.

X Q. 142. You did not call on them between 1873 and 1881, did you?

A. I have made a mistake there which I wish to correct. I called on them through my counsel earlier than that, somewhat; I don't just recollect when. I think Mr. Banning stopped there and saw them as my counsel.

X Q. 143. Did you make any demand yourself to know the number of machines made by them or for returns of royalty be-
487 tween 1873 and 1881?

A. No, sir; I did not.

X Q. 144. Then I understand you distinctly to say you, having charge of the business of collecting royalties under these patents for yourself and those interested with you jointly—you made no demand directly upon the Remington Company between 1873 and 1881?

A. Not personally; I did through my counsel.

X Q. 145. What demand did you make through your counsel?

A. I instructed my counsel to call on them.

X Q. 146. Do you know yourself what demand was made on them, either through yourself or your counsel, between 1873 and 1881? Do you know of your own knowledge?

A. I know I have my counsel's word for it.

X Q. 147. When did your counsel call on them—between 1873 and 1881?

A. I think 1879, was it not?

X Q. 148. If you know state it.

A. I will state it according to the best of my recollection. I think it was 1879.

X Q. 149. State, according to your recollection, whether you ascertained then the number of machines they had made.

A. No, sir; I did not, to the best of my recollection.

X Q. 150. Then I understand in 1881 you commenced a suit?

A. Yes, sir.

X Q. 151. Against the Remington Company?

A. Yes.

488 X Q. 152. How far did that suit progress?

A. I think the suit never went beyond the simple commencing of the suit.

X Q. 153. After the suit was commenced you went down to see them?

A. After the suit was commenced my counsel was there. They wrote me they desired a settlement. My counsel was there and arranged a settlement.

X Q. 154. Did you go down yourself?

A. I went down and consummated it.

X Q. 155. You didn't go and see them in 1881?

A. I think it was in 1881; at the time of the agreement.

X Q. 156. Did you take any further means to know how many machines they had made?

A. I don't know. I would like to state here, in regard to the

Remington matter, that there was quite a quantity of their machines that was included in the Geneva Lake suit that was purchased of the Remington Company by the Geneva Lake Company and sold by them, which come in under the Geneva Lake judgment. I don't remember just the number. Mr. Banning would probably remember the exact number.

X Q. 157. How many machines did the Remington Agricultural Company make returned to you in the statement?

A. I don't remember the number, but it amounted, at three dollars a machine, to $4,050.

489 X Q. 158. Did you understand that included the machines they had made from 1860 up to the date of the settlement with you?

A. From 1873, aside from the machines I have mentioned as coming under the Geneva Lake suit, the number I don't remember.

X Q. 159. Did you release them from the Geneva Lake machines?

A. Yes, sir.

X Q. 160. How many machines have they made which were called Geneva Lake machines?

A. I couldn't tell without looking.

X Q. 161. Give me your best recollection or look at the thing which will enable you to tell me.

A. About 800 of the Remington machines. I understand the entire number of machines which the Remingtons had made was 1,350.

X Q. 162. Did you ever get any return at that time from the Remington Company for anything they made after 1881?

A. I have.

X Q. 163. When did you get that return?

A. This fall.

X Q. 164. Did you get any return from the number of machines made by them in 1881 or 1882?

A. I did. For 1882 they reported 62 machines, and sent a check for $186 on December 26, 1882.

490 X Q. 165. Did you take any means to ascertain whether the return of the machines made for the year 1882 was correct?

A. I have not.

X Q. 166. What return did the Remington Company make for 1881?

A. 1881 was included in that settlement.

X Q. 167. The return of 62 machines was for the years 1881 and 1882?

A. 1881 was in the settlement I stated.

X Q. 168. What royalty did you collect under your patents for the year 1882?

A. I have given you the Remington and the Ann Arbor Company.

X Q. 169. Give the collections you made in 1882 on royalties which you collected in 1882 under your patents.

A. Ann Arbor Company, 190 machines; draft for $570 as royalty.

X Q. 170. The Remingtons returned how many machines?

A. Sixty-two.

X Q. 171. And paid $186?

A. Yes, sir. The Wayne Agricultural Company paid me $1,500 on the 20th of January, 1882.

X Q. 172. How many machines did they return?

A. They did not return; they paid me by the year.

X Q. 173. How much did they pay you by the year?

A. $1,500 a year.

X Q. 174. How many machines did they make in the year 1882?

491 A. I could not tell. I have never been there and never inquired. I know they made about 300 the year before, and this probably would be about the extent of their business, ordinarily.

X Q. 175. You don't know how many machines they made?

A. I do not.

X Q. 176. Did they pay you anything for the year before?

A. Yes, sir.

X Q. 177. Did you give me an account of that?

A. I forgot that. They paid me $900 for the year before.

X Q. 178. Then you forgot to mention that in the year 1881?

A. I forgot to mention the Wayne Agricultural Company.

X. Q. 179. They paid you $900 for manufacturing 300 machines?

A. It was paid in January, 1882. It was paid on final settlement of the suit pending between us.

X Q. 180. Have you given all the royalties you collected in 1882?

A. I think I have. I have collected no royalties from the Geneva Lake Company of John Haskins, successor of the Geneva Lake Company. They have made a report, and think they have got three machines out of my reach. They reported 200 machines.

X Q. 181. Do they decline to pay you?

492 A. It is quite likely they decline. The matter stands in this way: They think they have got their machine out of my reach and I think differently. The matter is in process of adjustment between us now.

X Q. 182. Did you ever make any effort to collect the royalties of the Remingtons for machines made by them prior to 1873?

A. As stated here, I visited them in April, 1873, and collected $500 for machines made by them—the machines known as the Sherwood mower.

X Q. 183. Was that in full settlement of all the machines made prior to 1873?

A. Yes, sir.

X Q. 184. How many machines did they report they had made?

A. They stated they had made towards 100 machines. I don't recollect the exact number, but I think it was somewhere in the neighborhood of 100 machines; but they had discontinued and had gone to manufacturing the Crawford mower, which they then had under course of construction, but none completed that I saw. I would like to state that the moneys I have referred to in answer to these various questions I have referred to as royalties and not as money collected otherwise—simply as royalties—except as to Gam-

mon & Deering and Bloom and the $500 from the Remingtons.

493 X Q. 185. How much money did you collect under patent in the year 1868?

A. None.

X Q. 186. How much money did you collect in any way und r your patent in the year 1869?

A. None.

X Q. 187. How much money did you collect under your patent in the year 1870?

A. None.

X Q. 188. How much in the year 1871?

A. None.

X Q. 189. In 1872 how much did you collect in any way under your patent?

A. None.

X Q. 190. In 1873?

A. In 1873 I collected $500 from the Remingtons and $500 from Bloom. The Bloom money was paid under a penalty clause in his contract, not for machines manufactured, because he never manufactured one, and the Remington money was paid me on a few machines they had manufactured, known as the Sherwood mower, but had discontinued the manufacture of them before I saw them.

X Q. 191. Did you give a release for the past then?

A. I did.

X Q. 192. Did you consider that royalty or not?

A. I didn't consider it royalty; I considered it as a lump settlement.

494 X Q. 193. How much money did you collect in any way under your patent in 1874?

A. I don't think I collected any.

X Q. 194. How much did you collect under your patents in any way in 1875?

A. I think none.

X Q. 195. How much did you collect in any way under your patents in 1876?

A. None.

X Q. 196. How much did you collect in any way under your patents in 1877?

A. In 1877 I collected $2,650 of Gammon & Deering—a lump settlement.

X Q. 197. Was that royalty or not?

A. No, sir; that was not royalty.

X Q. 198. What year was that?

A. That was 1877.

X Q. 199. How much money did you collect in 1878 in any way under your patent?

A. I don't recollect of any.

X Q. 200. How much money did you collect in the year 1879 in any way under your patents?

A. I don't think I collected any in 1879.

X Q. 201. How much money did you collect in any way under your patents in 1880?

A. I think I collected for the year 1880 some $90 from Ann Arbor people for thirty machines.

X Q. 202. Was that in the way of royalty?

A. Yes, sir.

495 X Q. 203. Is that all you collected in 1880 — any way under your patents?

A. I think it was.

X Q. 204. How much did you collect in any way under your patents in 1881?

A. I collected $12,000—realized it under the patent in the transfer of matters of the Warrior to Mr. Burrill—and I collected $4,050 from the Remingtons, and $2,637.50 of the Geneva Lake Crawford Company, and $200 paid by them some time in Jan'y, in advance.

X Q. 205. All that was in 1881?

A. Yes, sir. One payment was for past and the other for the future.

X Q. 206. Which was for the past?

A. The larger sum. In addition, I received from them the right of the State of Indiana in the Burdick & Le Roy patent?

X Q. 207. Was that royalty?

A. No, sir; it was on a judgment.

X Q. 208. The whole thing is royalty collected?

A. It is royalty, judgment, and settlements—royalty, judgments, and settlements all mixed up.

X Q. 209. How much money did you collect in any way under your patent in the year 1882?

A. In the year 1882 I collected $10,000 from the Johnstons and $570 from the Ann Arbor Agricultural Company and $186

496 from the Remingtons and $900 from the Wayne Company, paid me for 1881, that was paid in 1882.

X Q. 210. How much of this money you collected in 1882 was what you call royalty?

A. The $570 was royalty from the Ann Arbor Company, and the $186, if I remember right, from the Remingtons was royalty, and the $900 from the Wayne Company.

X Q. 211. Which of these amounts which you collected in 1882 was collected by suit or after you had commenced suit?

A. It was all collected after suit was commenced.

X Q. 212. Against the several parties?

A. No, sir.

X Q. 213. How much of the money collected in 1882 under these patents was collected after you commenced suit against the several parties?

A. I have stated.

X Q. 214. State it again.

A. Let me explain; the royalties you have inquired of me which were royalties——

X Q. 215. How much of the money collected in 1882, under these patents, was collected after suit?

A. The $10,000 from the Johnston, and the Wayne Agricultural Company, $900; I think that was all I collected that year after bringing suit in the way of settlement.

X Q. 216. Between the years 1868 and down to and in-
497 cluding the year 1879, can you tell me what was the total amount of royalty paid to you under these patents?

A. I did not collect any royalty during that time as royalty. There is a hundred dollars I wish to explain on the record. I sold D. M. Osborne & Co. a shop right for the use of this pin, under this later patent, for $100 during this time.

X Q. 217. From January, 1880, up to the present time, how much have you collected as royalties and from whom?

A. I collected from the Ann Arbor Agricultural Company $90; from the Wayne Agricultural Company, $900; from the Geneva Lake Company, $200; from the Remingtons, $4,050; that was after the suit was brought; and $186 from the Remingtons for 1882, and $570 from the Ann Arbor Company.

X Q. 218. How much money from 1880 to the present time have you collected as royalties, without suit?

A. I have collected from the Ann Arbor Company the two sums of $90 and $570; from the Remingtons, $186, and from the Geneva Lake Company, $200.

X Q. 219. At what rate per machine did you collect royalties, as stated in your last answer, between 1880 and the present time?

A. $3.00 a machine.

X Q. 220. What difference did you make when parties infringed only one of the two claims in your royalty?

498 A. I made on the three-dollar rate fifty cents for one claim and $2.50 for the other.

X Q. 221. That is in these demands for 1880?

A. Yes, sir.

X Q. 222. You had a claim against the Warrior machine?

A. Yes, sir.

X Q. 223. Did you ever bring suit?

A. I did.

X Q. 224. Did you get judgment?

A. No, sir.

X Q. 225. Did you try to ascertain how many machines the Warrior people had made, or take any method to find out?

A. I never have taken any forcible method.

X Q. 226. Did you ascertain, any way, how many they had made?

A. I was told all kinds of stories about their business.

X Q. 227. How many machines did you ascertain they had made?

A. I never ascertained; Mr. Burrill came here.

X Q. 228. I ask you whether you took any means to ascertain how many machines they made?

A. I did not go through their books, and I had no authority to go through their books.

X Q. 229. I merely ask you if you ascertained.

A. No, sir; I did not.

X Q. 230. Did you ever take any means to ascertain how many machines the Johnston Harvester Company made?

A. Not any further than inquiring of themselves.

499 X Q. 231. Did you get a return from them — how many machines they had made or reported?

A. No, sir; I did not.

X Q. 232. What answer did they make as to your inquiry as to the number of machines?

A. I got this information from the Johnston people that this feature was only used in a small portion of their machines; that they built some four or five different machines, this being one of them, and that they had not built this a great while, and the party who was here did not know himself how many they had built, but said in a general way that their business was largely overrated.

X Q. 233. Through whom did you make settlement with the Johnston people?

A. There was a good deal of question as to whether I would succeed in holding that machine.

Mr. Harding objects to the witness volunteering statements which are not responsive to the question.

X Q. 234. Did I ask you whether there was a doubt about holding that machine in my question?

A. No, sir.

X Q. 235. Why did you put it in your answer?

A. I was attempting to give you my reasons for making the settlement.

X Q. 236. Did I ask you for your reasons for making the settlement?

500 A. No, sir; I withdraw my answer.

X Q. 237. Did you ever call on the Johnston Harvester Company?

A. Personally?

X Q. 238. Yes, sir.

A. No, sir; I did not.

X Q. 239. Did you swear to the bill that was filed against them?

A. I did.

X Q. 240. Did you allege in that bill that they infringed your patent?

A. I alleged I believed they did.

X Q. 241. Did you employ anybody to negotiate between you and the Johnston Harvester Company?

A. Nobody but my counsel.

X Q. 242. Was Mr. Glass consulted by you in connection with it?

A. He was not. In relation to the settlement?

X Q. 243. Yes.

A. I don't remember that he was.

X Q. 244. Did you ever say anything to Glass on the subject?

A. He was aware I had sued the company; I told him I had sued them.

X Q. 245. That was all you ever said to him on the subject?

A. I would not say all I ever said; still it might be all I ever said. I never sought Mr. Glass's aid in bringing about the settlement in any manner that I have the remotest recollection of.

501 X Q. 246. You received the net sum of $10,000 from the Johnston Harvester Company?

A. Yes, sir.

X Q. 247. Was that sum paid to you in a check or notes?

A. It was paid partly in notes and partly by check or draft.

X Q. 248. Did you give to the Johnston Harvester Company or anybody connected with it any rights or privileges other than in that paper?

A. No, sir.

X Q. 249. That paper expresses fulley the settlement you made?

A. It does.

X Q. 250. How many machines had the Janesville people made at the time you made the agreement with them?

A. They had made none, as I understood it.

X Q. 251. Who informed you that the suit against the Johnston Harvester Company could be conducted by them at the expense of the defendants in the present suit?

A. I think that I got that information from my counsel; I think my counsel got that information from another source.

X Q. 252. You got it from your counsel—that is all you know?

A. I am generally pretty well satisfied with that kind of knowledge. I would like to state, in relation to that, that I received this information before the settlement was made with the Johnston Company; it is nothing of recent date.

502 X Q. 253. How many machines were ever built by you or your associates under the patent of 1868?

A. I don't know; I should say 150 to 200.

X Q. 254. In what years were they built?

A. Something over 200 in 1865, 1866, 1867, 1868, and 1869; I can't give you the exact number.

X Q. 255. How many machines were made by you and your associates under the patent of 1868, after the granting of the patent?

A. 130.

X Q. 256. That is, by you and your associates from that time to the present?

A. Yes; the machines I had anything to do with; not my licensees.

X Q. 257. What became of those 130 machines?

A. They were sold to farmers, most of them.

X Q. 258. Can you give me the names of any persons who bought any of the 130 built under the patent of 1868?

A. I guess I might give you a few names. I will give you the name of George Druce.

X Q. 259. Where does he live?

A. Town of Warren, Lake county.

X Q. 260. What is his post-office address?

A. I could not tell you.

X Q. 261. Can you give me the post-office address of anybody to whom you sold any of these machines?

A. It is a long time ago; I don't know that I could locate them. I will think it up and give you some names in the morning.

503 X Q. 262. Was the building of these machines in the year 1860 profitable?

A. I should presume not.

X Q. 263. Why should you presume not?

A. From the fact of mismanagement of the business.

X Q. 264. Did you make or lose in the manufacture of these machines while you were in the business?

A. I suppose money was lost on the small scale that was done.

X Q. 265. How much money did you lose in building them?

A. I did not lose anything but my time.

X Q. 266. How much did the parties engaged in building them lose?

A. I could not answer that question; I don't know how much they had invested.

X Q. 267. They kind of broke up?

A. Yes.

X Q. 268. You afterwards bought or controlled an interest in the Burdick patent, did you not?

A. No, sir; I bought a State right in the State of Indiana for the Burdick and Leroy patent.

X Q. 269. Did you grant a license under that to any one?

A. No, sir; I did not. I did not buy the whole thing; there was some few counties out of the State.

504 X Q. 270. Did you ever assign the right to the State that you had bought or license under it?

A. I did not; I assigned one county.

X Q. 271. To whom was that?

A. To the Wayne Agricultural Company.

X Q. 272. That was included as a part of the consideration in one of the agreements?

A. Yes; that was at the time of the settlement, in January, 1882.

Redirect examination by Mr. BANNING:

R. D. Q. 273. In using the term "royalty" or royalties you have referred to money paid at specific rate per machine under licenses previously granted, have you not?

Mr. HARDING: Objected to as leading and because the witness has fully explained several times how the money was collected.

A. Yes, sir.

R. D. Q. 274. If the term should include other moneys paid at a specified rate per machine for machines manufactured previous to any agreement, then would it or would it not cover the $4,050 paid by the Remingtons in 1881?

Mr. HARDING: Objected to as leading and because the witness has already fully explained.

A. The facts are these: The Remingtons desired to take a license and report machines they had manufactured previous to the taking

of the license at the regular license rate, and it was so paid and received.

505 Mr. HARDING: Answer objected to.

R. D. Q. 275. If the term royalty or royalties should include any money paid for the privilege of using the patented invention would it cover any other moneys than those which you have referred to as royalties?

Mr. HARDING: Objected to.

A. I don't understand the question.

R. D. Q. 276. Was the money paid by the Wayne Company paid on compulsion of a suit, or did they desire to avail themselves of the privilege of paying it under the license to them at that time?

Mr. HARDING: Objected to as instructing the witness and calling for hearsay testimony.

A. They desired to pay it as though there had been no interruption of the license privilege.

Mr. HARDING: Objected to as hearsay testimony.

R. D. Q. 277. Did they insist on this position in the suit at Indianapolis?

A. They did.

Mr. HARDING: Objected to.

The WITNESS: I would like to make a correction in relation to the Ann Arbor license. That license is not of the date it bears. That license bears the date of a previous draft sent them by mail. Some few days or a week or two, perhaps longer, I was at their place, and there was one or two alterations they wished to make in
506 it, and they made a copy themselves of the license we had sent them, putting in the changes they desired, but dated it of the same date as the original draft. I think also I may be mistaken as to the money received from Gammon and Deering. I received that in 1878 instead of 1877. I remember I received it at Wichita, Kansas, where I was that year.

Adjourned to 10 o'clock a. m. Feb'y 14.

FEBRUARY 14—10 o'clock a. m.

Parties met pursuant to adjournment, when the redirect examination of ALVARO B. GRAHAM was continued by Mr. BANNING as follows:

R. D. Q. 278. You said yesterday on cross-examination that you believed the settlements with the Remingtons, the Johnston Harvester Company, and Burrell were made after the bills were filed, but before any further proceedings were taken in the several infringement suits referred to. State whether you were correct in that statement; and, if not, exactly what the facts were.

Mr. HARDING: Objected to, as the witness has already been interrogated as to these settlements.

A. I find, by looking at the papers in some of these cases, that the Johnston harvester case was attended——

R. D. Q. 279. What proceedings have been had?

507 A. Proceedings were had and *prima facie* evidence was taken and Mr. Bennett——

R. D. Q. 280. And what was done in the Remington case?

A. In the Remington case—our expert testimony was taken in that case.

R. D. Q. 281. That is, you mean to say that the settlements with the Remingtons and the Johnston Harvester Company were not made until after the *prima facie* evidence was taken in each case?

Mr. HARDING: Objected to.

A. Yes, sir.

R. D. Q. 282. After thinking the matter over, do you recollect any conversation with Mr. Glass in reference to the machines manufactured by the Johnston Harvester Company?

A. I do.

R. D. Q. 283. What were such conversations?

Mr. HARDING: Objected to, as the witness was fully cross-examined on this yesterday.

A. I remember a conversation with Mr. Glass, in which he stated to me that he thought that company had manufactured in the neighborhood of 25,000 machines of all kinds. They make a variety of machines, however.

Mr. HARDING: Objected to as also having been stated yesterday.

The WITNESS: I simply wish to correct myself as to that conversation from the fact that I did not remember it yesterday.

508 R. D. Q. 284. You said something yesterday about the connection of attorneys representing the defendants in this case with the defense of other cases commenced after the decision in this case. Please state fully what you know on that subject.

Mr. HARDING: Objected to, as the plaintiff was cross-examined about this matter yesterday, and as immaterial.

A. Well, sir, I know that in the Johnston Harvester case Mr. George Harding and Mr. John R. Bennett appeared for the defendants. Mr. Bennett cross-examined Mr. Bates, our expert in our *prima facie* testimony. In the Remington case our *prima facie* evidence was taken, and General Leggett, who was also counsel for these defendants, crossed-examined our expert witness in that *prima facie* case. In reference to the Warrior Mower Company I stated yesterday that I had been informed that these defendants' attorneys or some of them were defending or advising the Warrior Mower Company, but since testifying yesterday I have seen a letter from Mr. Burrill in which he states that he was informed by Mr. Bramer, the general manager of the Warrior Mower Company, that he had consulted Mr. Dickerson, of New York, in New York city, in relation to this patent and their machines, and that Mr. Dickerson ad-

vised them that there was no infringement. Mr. Dickerson was also one of the defendants' counsel.

509 Mr. HARDING: Testimony is objected to as hearsay.

R. D. Q. 285. Did you ever see either of the defendants in this case before this suit was commenced, at any time, in reference to their manufacturing your inventions or anything relating to them? If so, please state fully whom you saw, when you saw them, and what was said.

A. I did see them. In September, 1869, I think it was, I had one of my machines on the corner of West Lake and Jefferson streets. I went to *this* defendants' works, on the north side at that time, with a view of getting them to look my machine over. I though I had something that might attract their attention. At that time they informed me—I can't say whether that is the gentleman that I met, this was the first time I ever met him, Mr. L. J. McCormick—they informed me they had as good machines as the market afforded, and they didn't care to look at my machine, though if I would haul it down to their works they would look it over. I thought the prospect so slim that I did not haul it over there. Again, I think in the winter of 1871 and 1872, I called at Mr. L. J. McCormick's residence in the evening—a party by the name of Streeter went with me—and tried to get his attention to some features of my invention. I called there, I guess, two or three time in the evening. Mr. Mc-

510 Cormick was very busy at that time building their works, and it was almost impossible to see him excepting in the evening, and I had a number of interviews with him in relation to that subject, and finally, after they had got into their new works and was running their business there, I called several times. The last interview I had with Mr. Leander J. McCormick was at their office at the works, and he told me when I got ready to take about the price of a dead horse for what I had to come to see him. I never went up. I concluded that was sufficient. I presume Mr. McCormick remembers that. During this time, however, I was talking with ex-Senator Doolittle in relation to my matters and my efforts and he kindly volunteered to give me a letter of introduction to Mr. Cyrus H. McCormick, saying that he thought that perhaps by calling his personal attention to it I might meet with better success. I took Mr. Doolittle's letter to Mr. Cyrus H. McCormick in his office down town and he treated me very pleasantly. He informed me he could not give it his personal attention and referred me directly to the active parties at the works.

Mr. HARDING: About what date was that?

A. I think that was in 1873. It was in the winter of 1871 and 1872—the winter after the fire—that I first called at M. L. J.

511 McCormick's house, and I think this was in 1873—along in the summer of 1873—that I called on Mr. Cyrus H. McCormick. I believe that is briefly the explanation of my efforts with the defendants in that direction.

R. D. Q. 286. State whether you endeavored to get other manufacturers to take licenses after the transfer of the patent to your

brother; and, if so, how you succeeded, what difficulties you had to meet, and so on.

A. I have constantly endeavored to get manufacturers to adopt my patent and manufacture it, and I have quite generally met with the response that these defendants and others would ultimately break up my patent, and they would not care about engaging in it.

Mr. HARDING: Answer objected to as hearsay testimony.

R. D. Q. 287. When was the first suit commenced on your patent?

A. The first suit was commenced, I think in 1874—late in 1874. I have not got the exact date of the commencement of that suit; I think it was in December, 1874.

R. D. Q. 288. Was that suit defended?

A. It was.

R. D. Q. 289. Were you able to get manufacturers to recognize the validity of the two claims of your patent now in controversy before the decision against these defendants?

A. In part I have. The Wayne Agricultural Company
512 partially recognized the validity of my patent at the time that they entered into this contract, but on final settlement of the suit with them they insisted upon making the deferred payments for future royalty contingent upon the outcome of this litigation or any other.

R. D. Q. 290. Has the fact that the patent was being opposed in this litigation or any other ever been referred to or urged as a reason why manufacturers should not recognize it or take licenses?

A. Well, in the general way that I have mentioned here—that my claims would ultimately be wiped out—is about all I have met in that direction.

R. D. Q. 291. You referred yesterday to some books kept by ourselves. What have you to say in reference to that this morning?

A. I have examined those books, and I find them simply the accounts of my counsel with their several clients, myself among the number.

Recross-examination by Mr. HARDING:

X Q. 292. What kind of mowing machines was Mr. McCormick building when you called on him?

A. He was building a machine called "The Advance"—a two-wheeled, flexible bar machine.

X Q. 293. That was in 1873?

A. Yes.

513 X Q. 294. Who did you call on in 1868, of manufacturers or others?

A. In 1868? I didn't call on any person that year; I was trying to build a machine myself.

X Q. 295. Who did you call on in 1869?

A. The same in 1869.

X Q. 296. Who did you call on in 1870?

A. In 1870 I called on the Bloomington Manufacturing Company

and made a verbal agreement with them, which I testified about yesterday.

X Q. 297. Is that all in 1869?

A. No, sir; I called on a gentleman by the name of Flagg, also of Bloomington.

Q. 298. What was he doing?

A. He was at that time building a large agricultural manufactory at Bloomington, which he afterwards completed, and manufactured various agricultural implements.

X Q. 299. What kind of a mower was he making?

A. He made a mower called "The Farmers' Friend."

X Q. 300. Did he decline to take a license?

A. I will state that I called on him by his request, sir, and there was a bit of competition sprang up between myself and the patentee of the machine; that he finally adopted —, and that patentee offered to take stock in this concern in lieu of royalty, but I declined to do that. He offered me the preference if I would take some stock.

514 X Q. 301. Then he would not deal with you?

A. I would not deal with him; I had the preference.

X Q. 302. Then you didn't deal together?

A. No, sir.

X Q. 303. Did you call on anybody else in 1869?

A. This was in 1870.

X Q. 304. I was speaking of 1869.

A. In 1869 I called upon those gentlemen, the defendants, as stated.

X Q. 305. Do you speak of any others in 1869?

A. A firm on the west side of Jefferson St.—Holmes & Pyott.

X Q. 306. Were they building a mower?

A. No, sir; they were not; but they had large works and plenty of capital, and I made an effort to induce them to take up the machine and manufacture it; I believe that constitutes my efforts in 1869.

X Q. 307. Did they decline to do it?

A. Well, sir, at one time I thought I had the thing pretty near consummated, but if you remember black Friday——

X Q. 308. Answer my question; did you succeed?

A. I did not succeed.

X Q. 309. I only want to know whether they took a license or not?

A. They did not, sir.

X Q. 310. You came to no agreement?

A. No, sir.

515 X Q. 311. Did you call on any one in 1870?

A. In 1870? I have stated.

X Q. 312. Did you call on any one else?

A. On the Bloomington Manufacturing Company and made an arrangement with them, which I have stated several times, and also called on Mr. Flagg by his request.

X Q. 313. In 1871 who did you call on?

A. In 1871 I made some efforts with D. M. Osborne & Company, of Auburn, New York; that year I was employed by them in their service.

X Q. 314. Did they come to any agreement with you?

A. They did not; no, sir; they were building a machine known as the Kirby, and also a machine known as the "Burdick." The Kirby was a combined machine and the Burdick was an independent single reaper.

X Q. 315. Did you call on any one in 1872?

A. In the winter of 1871 and 1872—it is not necessary for me to state those I have already stated—I called on Miller & Altman, of Canton, Ohio, also of Akron, Ohio, and the Seiberling Manufacturing Company—I don't know as that is the proper name of that company, but Seiberling was the general manager of that company.

Mr. BANNING: Where were they?

A. They were at Akron, Ohio. I called on Russell, at Massillon; also Bayliss, of Massillon. I made a trip that winter to
516 manufacturers of this kind of goods generally through the States of Ohio and New York, ending up with Walter A. Wood, at Hoosick Falls.

X Q. 316. Who did you call on in 1873? None of this people in 1872 made any agreement?

A. No, sir; none except D. M. Osborne. I sold them the shop right on one feature of my invention.

X Q. 317. On this patent?

A. No, sir. That is distinctly stated in my testimony yesterday.

X Q. 318. They made no agreement under this patent—none of them?

A. No, sir.

X Q. 319. Who did you call on in 1873?

A. In 1873? I don't know that I called on anybody specially that year.

X Q. 320. Who in 1874?

A. I have stated that I called on Mr. McCormick. My last call was in 1873.

X Q. 321. In 1873?

A. Yes; the last call on Mr. McCormick was in 1873.

X Q. 322. Who did you call on in 1874?

A. I don't remember of making any special effort in 1874.

X Q. 323. Who did you call on in 1875?

A. The same is true of 1875.

X Q. 324. Who did you call on in 1876?

A. In 1876, as I stated yesterday, I commenced negotiations with the Wayne Agricultural Company, through their president.

X Q. 325. Is that all in 1876?

517 A. That is all I remember.

X Q. 326. In 1877?

A. I don't think I called on anybody especially.

X Q. 327. In 1878?

A. In 1878 I called on the Wayne Agricultural Company to

finally close up the negotiations that were commenced in the winter of 1876, during those years.

X Q. 328. Who did you call on in 1879?

A. I don't think I called on anybody specially in 1879.

X Q. 329. Who did you call on in 1880?

A. I called on Wyckoff, Tuttle & Olin, of Perry, New York.

X Q. 330. Did you make any agreement with them?

A. No, sir; I also called on Sweet, Faulkner & Co., of Dansville; also Sweet, of Wellsville, New York; these last named were in New York. I am mistaken as to one in 1879. In December, 1879, I called on a concern in Indiana; I can't call the name of the people or firm. It was some fifteen miles from Richmond, Indiana.

X Q. 331. Did you make any agreement with these last people you have mentioned?

A. I did not; no, sir.

X Q. 332. Who did you call on in 1881?

A. I don't remember of calling on anybody in 1881 specially as to that. Let me see, in 1880 the Ann Arbor people they came to me for a license. I have stated that was consummated in another part of the record.

518 X Q. 333. Do you know the number of machines that the Remington Company manufactured in each year prior to 1879?

A. Well, I do not, sir; they gave me the gross number of all machines manufactured up to the time they took the license.

X Q. 334. That was when—in what year?

A. In 1881—June, 1881.

X Q. 335. You don't know how many machines were made, prior to 1881, in any one year, specifically?

A. No, sir; I do not.

X Q. 336. Where is the testimony which you say you took in the Johnston harvester case?

A. I think that is in my counsel's office.

Mr. Harding, counsel for defendant-, requests witness to produce testimony taken in the Johnston harvester case, that a copy of it may be attached and marked as an exhibit.

X Q. 337. Were you present at the time of taking the testimony?

A. I was present at the time—a part of the time.

X Q. 338. Did you cause Mr. Bates to be produced as a witness?

A. Yes, sir.

Mr. Harding, counsel for defendant-, requests the witness to produce the model of defendants' machine in the case against the Johnson Harvester Company.

Mr. BANNING: I also produce and offer in evidence a copy
519 of defendants' answer in the case against the Johnston Harvester Company.

Mr. HARDING: All of which will be marked, respectively, Johnston Harvester Company testimony, Johnston Harvester Company model, and Johnston Harvester Company answer.

The WITNESS: I wish to state here that in 1873 I called on the Spragues, whom I had omitted to mention; I called on them to try and effect a settlement and arrange with them to continue the manufacture of machines on a reasonable basis.

X Q. 339 Did you make any agreement with the Spragues?

A. I did not; no, sir.

X Q. 340. Did you ever have any dealings with Mr. Christopher Bradley, of Syracuse?

A. I never have had any dealings with him; have had talks with him.

X Q. 341. Did you ever make any settlement with Christopher Bradley?

A. No, sir.

X Q. 342. Or the Bradley Manufacturing Company?

A. No, sir. I did call on C. C. Bradley & Son, also in Syracuse.

X Q. 343. Did you make any settlement with them?

A. No, sir; I never made any settlement or deal with them; I called on them in the year 1872.

X Q. 344. Did they claim to have made this invention?

A. No, sir. I called there to try and induce them to take
520 licenses and manufacture my machines at that time—in 1872.

ALVARO B. GRAHAM.

Subscribed & sworn to before me—

H. W. BISHOP,
Master in Chancery of the Circuit Court of the United States for the Northern District of Illinois.

521 EDWARD G. FRANKS, a witness produced, sworn, and examined on the part of the complainant, deposes and testifies as follows in answer to questions by Mr. BANNING:

Q. 1. State your name, age, occupation, and place of residence.

A. Edward G. Franks; 50 years of age; residence, 511 West Madison street; occupation, expert accountant.

Q. 2. What experience have you had as an expert accountant?

A. I followed it as a profession for five years and have been more or less in it for twenty-five years.

Q. 3. Have you examined the books of C. H. & L. J. McCormick, defendants in this cause?

A. Yes, sir.

Q. 4. When and for what purpose and to what extent?

A. I examined them during the month of December, 1882, for the purpose of seeing how many machines they sold during the years 1874, '5, '6, '7, '8, and '9.

Q. 5. Look at these books now before you and state whether they are the ones you examined.

A. Yes, sir; those are the books.

Q. 6. Who furnished them to you for examination?

A. McCormick Harvesting Machine Company, corner of Dearborn and Randolph streets.

Q. 7. What do these books show?

A. They show the number of machines of the different kinds manufactured, shipped, and sold, the agents' names that sold them, and the parties to whom they were sold.

522 Q. 8. Turning to the books, please state how many machines known as Advances, Prize mowers, and Droppers were sold by defendants, as appears from the books, from 1874 to 1879, inclusive?

A. The number of machines sold is as follows:

Advances in 1874	3,947
" '75	4,704
" '76	3,152
" '77	2,199
" '78	2,009
" '79	1,549
	17,560

Single Advance reapers:

1874	11
'75	201
'76	337
'77	236
'78	223
'79	187
	1,195

Mowers:

1874	1,284
'75	2,455
'76	2,188
'77	2,072
'78	2,040
'79	963
	11,002

523 Droppers:

1874	463
'75	657
'76	504
'77	376
'78	147
'79	50
	2,197

D. B. Droppers:

1877	210
'78	427
'79	412
	1,049

S. B. Droppers:

1877	81
'78	161
'79	210
	452

Six-foot Droppers:

1878	39
'79	83
	122

Q. 9. Have you made any statement of the sales for these years, 1874 to 1879, inclusive? If so, please produce it and state whether it is correct.

A. This is a summary, showing the sales of the Advance, single Advance mowers and reapers, from Jan'y 1, 1874, to Decem-
524 ber 31, 1879, inclusive, and it also shows the number of those machines that were sold after 1879—in 1880 and 1881—but they are entirely separate and can be eliminated without any trouble.

Mr. Harding, counsel for defendant-, objects to so much of the statement as shows anything subsequent to December 31, 1879.

Q. 10. Do the numbers of the Advance machines or mowers which you have given above exclude or include the machines shown by the books to have been double-frame machines?

A. It excludes them.

Q. 11. Then it shows this number of machines of single frames to have been sold during the years stated?

A. Yes; there are some double-frame machines in 1874, running into 1875 and '6, which I do not take into account in this.

Q. 12. Not included in the statement given?

A. No, sir.

Q. 13. State what they are called.

A. D. F. mowers.

EDWARD G. FRANKS.

Subscribed & sworn to before me—

H. W. BISHOP,
Master in Chancery of the Circuit Court of the United States for the Northern District of Illinois.

525 Mr. BANNING: I desire to state, in answer to a question by defendants' counsel, that in this case no claim is made on account of the double-frame machine manufactured by the defendants and represented by this model marked McCormick, Baker & Erpolding, patented October 27, 1868, and that it is not now contended that this construction of machine infringes the Graham patent.

Mr. Harding, defendants' counsel, states that the Saxton contract called for by complainant's counsel is now produced.

LEANDER J. MCCORMICK, being first duly sworn, deposes and testifies as follows in answer to questions by Mr. BANNING:

Q. 1. What is your name?

A. L. J. McCormick.

Q. 2. You are one of the defendants in this case and were one of the firm of C. H. and L. J. McCormick from 1874 to 1879, inclusive?

A. Yes, sir.

Q. 3. Look at these books which have been produced and which Mr. Franks says he examined and state whether they contain a full history of all your operations, so far as regards the manufacture and sale of machines, during those years.

A. I suppose I would scarcely be a competent person to testify to that. I have scarcely ever looked at the book. I have no doubt they are.

526 Q. 4. Where were your machines sold during the years mentioned, particularly the machines in controversy in this suit?

A. They were sold in the country. I could not, for my life, tell you the particular places.

Q. 5. You don't know what places or States?

A. They were sold in the Northern States, generally.

Q. 6. Were they shipped to Europe?

A. A limited number, I should think.

Q. 7. Were they sold in New York and Pennsylvania or any of the States in that neighborhood?

A. I should think very few in Pennsylvania or New York; some, however. I could not give an answer as to how many.

Q. 8. How many agents did your firm have engaged in the sale of machines in each of these years?

A. I could not tell you anything about that.

Q. 9. What would be your best judgment?

A. My best judgment would be no judgment at all. I don't know. We had a good many of them.

527 WILLIAM J. HANNA, being recalled, deposes and testifies as follows in answer to questions by Mr. BANNING:

Q. 1. Have you made an examination of defendants' books since your last examination to determine the number of "Droppers" made and sold by them from 1874 to 1879, inclusive? If so, please produce it?

A. I have, and I now produce such statement, showing 4,262 machines sold in all during those years, but of those 4,264 I believe about 500 should be deducted as having been sold in the shape and form of plain reaping machines, leaving the net number 3,762. These 3,762 machines were omitted from the first account rendered by me, and I introduce this as a supplement to that account. These machines contain the same features and are operated essentially in the same way as the machines contained in the first statement.

Q. 2. The statement you furnished at the time of your other examination shows an amount of over $57,700 paid to James A. Sax-

ton as royalties under other patents. Have you looked that matter up, and are you able to give any information on it now?

A. I have not looked it up, and I am not able to give any information. I know the money was paid.

Q. 3. Please produce a copy of the license under which that money was paid.

528 A. I here produce a copy of it.

Q. 4. How were those payments made—after the machines were sold or before, and in each year for the machines sold that year or for the machines sold in other years?

A. I could not tell you. To the best of my knowledge and belief, they were paid according to the terms of the contract.

Q. 5. This provides for the payment on the first of December in each year. Then, according to that, the royalties due for the machines sold during any given year were paid on the 1st of December of that year?

A. I don't know. I have furnished you a statement of the dates of payments and amounts in my former evidence.

Q. 6. How were the defendants' agents appointed, or what constituted an agent during the years involved in this account?

A. Invariably by written contract; a written contract renewed yearly if the party continued.

Q. 7. In your other examination you stated the defendants had about 5,000 agents. Do you mean that many each year?

A. I presume when you use the word agent, now, you are speaking of the general agent. These contracts are made at our head office with general agents. If you include subagents the contract is made by the general agent with the subagent in our account.

Q. 8. Did the defendants keep the accounts with the various

529 subagents appointed by the general agent?

A. No, sir; with the general agents only.

Q. 9. When you spoke of having 5,000 agents what did you mean?

A. Agents and subagents.

Q. 10. Did you mean the ones whose names you have on your books and whose accounts you would keep on your own books?

A. We include them in the five thousand.

Q. 11. Would that 5,000 include any whose accounts would not be kept by you?

A. Certainly.

Q. 12. In what way do you mean?

A. That five thousand would include many subagents whose names are not in our books. We do not keep an account on the books with subagents; we keep our accounts with the prime or head agent, and he keeps the account with the subagent.

Q. 13. Take, for instance, the case of your agent for Bloomington, in this State, in 1876, Mr. Hamilton being the general agent and Harwood Brothers the local agents, as appears from the 1876 books here present; would either of those agents have other persons in their employ selling those machines that you would consider agents and which you include in the number of 5,000?

A. I can't tell, but I think not.

Q. 14. Did you keep an account with the local agents, such as Harwood Brothers?

A. No, sir; we have only an account with the general agent for the district.

530 Q. 15. Did you in those years correspond with your local agents or have reports from them?

A. In all the years I have been in this business I have studiously avoided writing a letter to a local or subagent on any account whatever, and when they presumed to write us we inclosed the letter to the general agent. That is the course of proceeding. There are, of course, some exceptions, but that is the rule strictly adhered to. We try to deal only with the general agent, and when a subagent writes to us we refer the whole matter to the general agent.

Q. 16. Did you in those years have reports from local agents?

A. No official reports; a man might report there was a hail storm and call that a report, but we had no reports of business.

Q. 17. Look at any page—say page 25—of your 1876 book and state what the names mean of the first and second columns, the first entitled "agent" and the second "consignee."

A. I could not make that plainer than agent and consignee. Agent, in the first column, means general agent, occupying a large territory; the word consignee, of course, means the merchant to whom the goods are consigned or any man to whom a machine was shipped, whether agent, purchaser, or otherwise.

Mr. HARDING: Have you furnished a full statement of the
531 times and payments of the money mentioned in the Saxton contract, produced to-day, in your former statement?

A. I furnished such a statement to the counsel of complainant in my former evidence.

WILLIAM J. HANNA.

Subscribed and sworn to before me—

H. W. BISHOP,
Master in Chancery of the Circuit Court of the United States for the Northern District of Illinois.

Mr. BANNING: I now offer in evidence a copy of the license to Saxton produced by the witness Hanna, and the same is marked Complainant's Exhibit Saxton License.

Adjourned to meet by agreement.

532 MAY 29, 1883.

Said parties met by agreement.

Present: As before.

MARCELLUS A. MORSE, a witness produced, sworn, and examined on the part of the complainant, deposes and testifies as follows in answer to questions by Mr. BANNING:

Q. 1. State your name, age, occupation, and place of residence.

A. Marcellus A. Morse; 47 years; 804 West Madison street.

Q. 2. What business were you engaged in — 1877 and prior thereto?

A. I was engaged as one of the general agents of the Gibbs & Sterrett Manufacturing Company, manufacturers of the Climax mower and reaper. Our office was at 55 and 57 South Canal street, under the firm name of Beach & Morse. I was identified with that interest four years.

Q. 3. State whether you are acquainted with Alvaro B. Graham, the patentee of the patent sued on in this case; and, if so, how long you have known him.

A. I am; I have known him, I should think, for 8 or 9 years; about that length of time.

Q. 4. Have you ever had anything to do with him or for him in reference to the patent now in suit; if so, when and what?

A. I have. I think it was in the year 1876 that we made an arrangement whereby I was to receive, I think, 25 per cent.
533 of the interest in this patent, provided I secured any company or manufacturing interest to manufacture it—that is, 25 per cent. or one-quarter interest in the results of my work. I am not positive, though; it is so long ago that I am not positive; but, to the best of my recollection, it was one-quarter interest in the result of my work. I called the attention of the Sandwich Manufacturing Company to his patent. They at that time were desirous of manufacturing a mower to accompany their harvester in the trade. I called their attention to Mr. Graham's patent, and we had negotiations during a year, I should think; for some time there was a correspondence between us on that subject. I also had some correspondence and negotiations with the Wayne Agricultural Company, through Mr. L. L. Lawrence, the president of the company. The negotiations resulted in an arrangement with the Wayne Agricultural Company.

Mr. Harding objects to any arrangement, because it is in writing, and objects to conversations concerning any written arrangement.

Q. 4½. When did you first see Mr. Lawrence, of the Wayne Agricultural Company, and what was said or what occurred at that time?

Mr. HARDING: Objected to, because the arrangement was in writing, and that is the best evidence of the arrangement.

A. I cannot give the exact date of my first interview with Mr. Lawrence on this subject. I think it may have been in the
534 fall of 1876. The fall and winter of 1876–'7, he came to my office on Canal street, where the matter was talked up, and I sought Mr. Graham, who was then in town, and brought them together. At this time there was a suit pending upon this patent. I think the case was against Gammon & Deering, and it led to a talk about the proceedings. Mr. Lawrence did not want to engage in the manufacture of a machine on the basis of a patent in litigation, and no definite arrangement could be arrived at at that time concerning this using the patent.

Q. 5. Did you ever see Mr. Lawrence or have anything to do with him afterwards about the matter; if so, when and what?

A. I did. I could not give the exact date of these transactions, but subsequently to that this case was decided in favor of Mr. Graham, and negotiations were opened for them to use his patent. Considerable correspondence was had upon the subject.

Q. 6. State all about the negotiations, particularly as to interviews and statements made by Mr. Lawrence, and what the negotiations finally resulted in.

A. Mr. Lawrence came to see me in our office on Canal street two or three times, and arrangements were made for him to examine what was known as the Sprague mower, which was built upon the basis of Mr. Graham's patent. He went into the country in company with Mr. Graham, I think to Libertyville or near
535 Libertyville, in this State, where he saw and examined the Sprague mower and was well satisfied with its working. He then made a proposition for the manufacture of the mower under Mr. Graham's patent, which we would not accept at that time.

Mr. HARDING: Objected to.

Q. 7. What was that proposition?

Mr. HARDING: Objected to as irrelevant.
The MASTER: Objection overruled.

A. Mr. Lawrence made a proposition of $3.00 for each machine that we might manufacture; we asked $5.00, and the matter rested there for a time; the negotiations were not at that time closed. Subsequently, upon the representations of his company that they were having a very largely increased trade in their reaper, and as to the necessity of their having a light mower to accompany that in the trade, and that they intended to enlarge their works, increase their facilities, and do a large trade in this mower, it was finally considered best to accept his proposition for the territory named, and the contract was drawn up and duly signed.

Q. 8. What was said, if anything, by Mr. Lawrence in reference to pushing that mower business?

Mr. HARDING: Objected to.

A. He said the company would push it to the extent of their ability—their increased ability; they were to increase their facilities and they would be able to manufacture and sell a large number of those machines.

536 Q. 9. I think you have stated that Mr. Lawrence said they were going to manufacture a light mower?

A. I did.

Q. 10. There was no negotiation about the reaper, or any parts or attachments connected with the reaper?

A. None whatever.

Q. 11. Do you know what mower the Wayne Company was intending to adopt and manufacture when it took the license under Graham's patent?

Mr. HARDING: Objected to.

A. What was known in the trade as the Sprague mower.

Q. 12. That is the mower that had been previously manufactured by the Spragues of Rhode Island?

A. Yes, sir.

Q. 13. Was that mower in the market at that time?

A. It was not in the market at that time. I could not say how long it had been out; it was since the time of the breaking up of the Sprague manufacturing concern. I don't remember the date. There were a few scattered around the country, but it was not being, as I understood, regularly manufactured, the company having become insolvent or doing no business.

Q. 14. Was anything ever said in any of the negotiations with Mr. Lawrence about any other features than those relating
537 to a mower as described and claimed in the patent now in suit?

Mr. HARDING: Objected to.

A. I have no knowledge of anything else; made no negotiations, offered nothing of the kind, and knew of nothing.

Q. 15. How often did you see Mr. Lawrence in reference to the matter?

A. I saw him several times; the number I could not state. I met him in our business and in attendance on State fairs; in fact, our quarters at Louisville, Kentucky, were the same. I used to meet him there. His implements were sold at the same place, 31 Main St. We occupied one-half of the premises for our trade, and I met him at various times during the season; how many I could not state.

Q. 16. What was the object or purpose for which the license was granted to the Wayne Company?

Mr. HARDING: Objected to.

A. The question involved a matter of profit, to secure an income, to have the machine manufactured, to get it before the people, to introduce it again to the trade, and this concession was made for the purpose of having it started immediately and re-establishing its good reputation, for it certainly had a good reputation. Those of us who had been in the trade for years had to meet it.

Q. 17. What was the reason, as given by Lawrence, that he declined to make any definite arrangement at the time you
538 introduced him to Graham, in the winter of 1876–'7?

Mr. HARDING: Objected to.

A. Because the suit against Gammon & Deering was then pending and they had no desire to involve themselves in a lawsuit; in other words, they wanted a clear title to their right to manufacture.

Q. 18. Was the pendency of this suit against McCormick known at the time of the negotiations and transactions in 1878?

A. It was not, I think. I don't remember that it was spoken of at all in 1878.

Q. 19. At the time of the final closing of the negotiations?

A. I think it was.

Mr. HARDING: Objected to.

Q. 20. Do you remember whether it was mentioned or talked over at that time or in any of those negotiations?

A. I remember that the case was talked up and I suggested to Mr. Lawrence the profits of buying an interest in the patent at that time, saying to him that I was quite certain that this suit would be decided in Graham's favor. I thought it would be a matter of considerable profit to own an interest in the patent and tried to induce him to buy it.

Mr. HARDING: Objected to.

Q. 21. State whether that was in 1878.

A. I could not swear. I don't remember the exact date. I remember the conversation, however, distinctly.

539 Q. 22. As I have understood you, you say that the offer of $3.00 per machine was first made by Lawrence at the time he went out in the country to see the machines, in the summer of 1878?

A. It was.

Q. 23. That was the offer that was afterwards accepted?

A. It was.

Cross-examination by Mr. HARDING:

Q. 24. How much money in all did you make out of your 25 per cent. interest?

A. I could not tell you.

Q. 25. How much royalty did you get from any one that you negotiated with?

A. That I could not give you.

Q. 26. Give me an idea how much royalty you got and how much percentage you got out of it?

A. It was at the rate of 25 per cent.

Q. 27. How much for all?

A. I could not tell you.

Q. 28. Did you get $5,000?

A. No, sir.

Q. 29. Did you get $2,000?

A. No, sir.

Q. 30. Did you get $1,000?

A. I think it was $1,000.

Q. 31. Do you know from whom this money came?

A. It came from Mr. Graham.

Q. 32. I mean who paid the license fees?

A. I could not swear to that.

540 Q. 33. What is your best recollection?

A. The Wayne Agricultural Company; they are the only

parties I have any recollection or knowledge of having paid any royalty—the parties with whom I negotiated.

Q. 34. How much did they pay?

A. That I could not tell. I don't know the amount.

Q. 35. Do you know what they paid per machine?

A. $3.00 was the contract price.

Q. 36. I ask you how much they paid, if you know of your own knowledge—how much they actually paid per machine? State it.

A. I don't know, except the contract price was——

Mr. Harding objects to the repetition of the statement of the witness about the contract price.

Q. 37. You don't know how much they actually paid per machine of your own knowledge?

A. I do not. I know the contract price.

Q. 38. I didn't ask you about that. Don't you know the difference between the actual payment and the contract; don't you know a man may contract for a million of dollars and pay five?

A. Yes, sir.

Q. 39. I ask you if you know of your knowledge how much was actually paid per machine?

A. No, sir. I was not present when the money was handed over.

MARCELLUS A. MORSE.

Subscribed & sworn to before me—

H. W. BISHOP,

541 *Master in Chancery of the Circuit Court of the United States for the Northern District of Illinois.*

Mr. BANNING: I now produce certain pamphlets and publications purporting to have been issued from the office of C. H. & L. J. McCormick and ask counsel for defendants whether they will admit that they are genuine.

Mr. HARDING: It is admitted by counsel for defendants that they were issued from McCormick's office.

Mr. BANNING: I now offer said pamphlets and publications in evidence, and particularly the following parts thereof, namely:

542 1. From a circular issued by the defendants in 1875 the following:

"We wish to call your attention to the splendid line of harvesting machines which we are manufacturing. They embody the results of our experience of thirty years as manufacturers and contain all the valuable features suggested by that long experience, assisted by a large capital and unequalled facilities. We can safely assert that no other house in the same business can offer such inducements to purchasers as we can.

"We have now machines adapted to every condition of soil and climate found in our great country.

"Our Improved Advance is, perhaps, suited to the needs of a larger class of farmers than any other. It is the very best combined machine that is manufactured; as a reaper it is of unequalled excel-

lence and as a mower it defies competition; it has two bars—one for reaping, with malleable fingers and serrated sickle, and one for mowing, with wrought-iron steel-faced fingers and two smooth-edged knives, thus making two complete machines for the price of one.

"This machine is undoubtedly the best self-raking reaper in existence. The operation of the rake in separating the cut from the uncut grain and delivering the gavel upon the ground in the rear of the machine is perfect. Other manufacturers have tried for years to discover something that would equal the performance of
543 this ingenious piece of mechanism, but have failed entirely in the attempt.

"We have greatly improved the Advance this year, having substituted the single frame with an iron drag bar for the double wooden frame used last year, thus simplifying and lightening the machines very much, and at the same time preserving all the qualities which have made this machine such a general favorite in the past. Our arrangements for tilting the points of the guards to pick up fallen grain is very ingenious and effective, and at the same time easily managed by the driver. There are many other valuable features in this wonderful machine, which may be seen by an inspection of the machine itself.

"The Improved Prize mower is a two-wheeled machine, with jointed bar cutting four feet in width, and has proven itself the best and most reliable grass-cutter manufactured. It cuts equally well on rough or smooth ground and cannot be clogged in any kind of grass or clover. Owing to its great power, it can be stopped in the heaviest grass or clover and start again without backing an inch. We know that every purchaser of this implement will be more than satisfied with it. It is of very light draft, and is so nicely balanced that there is no weight on the horses' necks and no side draft.

"The Advance Dropper is a machine adapted especially to the wants of those having hilly farms or who raise but little grain
544 and a great amount of grass. It is a combined machine with two bars—one for reaping, cutting five feet wide, and one for mowing, cutting four feet wide. It is a complete machine of its kind, made under the Seiberling patents, but a great improvement on the original; it gave perfect satisfaction wherever it was tried during the past season, and every farmer desiring a light machine which will at the same time be very durable and do good work cannot do better than to buy the 'Advance Dropper.'"

2. From "The Advance," issued by the defendants in newspaper form, April, 1875, the following:

"We this year present to the favorable consideration of our friends the finest line of machines we have ever brought forward.

"We have—

"1st. Our improved single-frame Advance, a machine much handsomer in appearance and of lighter draught than the old double frame, but preserving the essential features of the machine which have made it so popular in the past.

"2d. Our Improved Prize mower, which during the past season has won hosts of friends.

"3d. The Advance Dropper, the best in the market.

"The Improved Advance, the king of combined machines.

"This machine stands in merit far ahead of all competitors—in fact, there is no machine fit to be called its competitor; it is so much superior to all other machines of its kind that it is strange
545 that farmers will be deluded into buying any other so long as they can get one of these famous grain-savers.

"There are many other reapers which work well enough in nice standing grain, which, in fact, are great improvements on the old-fashioned cradle, but the Advance stands without a rival in its adaptation to all conditions of grain, light or heavy, long or short, straight or tangled; in fact, no matter how bad the condition of the grain may be or how difficult to cut, this superb machine will cut it clean and rake it off in condition to be bound, saving every year thousands of bushels of grain to their fortunate possessors which would otherwise be lost.

"This may seem like empty boasting to one who has never seen this machine work, but every farmer who has used it, who has seen how perfectly it is adapted to its work in all its parts, will at once recognize the truth of the above statement.

"The proof of the pudding is in the eating, and all that is necessary to convince the most skeptical that this wonderful machine is all that is claimed for it is one fair, unprejudiced trial. We are willing that our reaper shall stand on its merits, and we here repeat the offer which we have always made, that any responsible farmer who wishes to do so can place one of our Advance machines on trial with any machine made, only agreeing to keep and pay for the one he likes best. We have never known an instance where this has been done in which our machine has failed to satisfy the
546 farmer making the test.

"We have improved this machine very much during the past year, preserving, however, the many points of excellence which have made it so deservedly popular in the past.

"We have replaced the double wooden frame by a single one, substituting for the auxiliary frame an iron drag bar, thus making the machine much lighter and handsomer without lessening its strength and durability, and at the same time retaining all the advantages of the double frame.

"We guarantee this, as we do all of our machines, to be first class in quality of material and workmanship, and claim that it is the cheapest machine of its kind offered for sale. By this we do not mean that it can be bought for less money than any other, though we think our prices this year will compare favorably with any, but that in the end, taking all things into account, a farmer buying our Advance will find that he has saved money by doing it for the following reasons:

"1st. Because, being a strong and durable machine, it will outlast

two of any other make and with less cost for repairs during the same period.

"2d. Because, by its efficient work, it will have saved during its life hundreds of bushels of grain that would have been lost with any other reaper.

"3d. Because, being always reliable and doing its work
547 under all circumstances, it will have saved his own and his binders' time, to say nothing of the saving of annoyance and trouble. The best is always the cheapest."

3. From "The Advance," February, 1876, the following:

"The past season has been the most arduous and at the same time the most successful we have ever had, and our machines have nobly sustained the great reputation they had previously earned, and have come through the trying harvest of 1875 with flying colors.

"In all of our long experience in the reaper business we never remember to have witnessed so severe a test of the good qualities of a reaper as has been furnished by the past harvest, and yet our machines have gloriously fulfilled the promises we made at the beginning of the season, many of them being sold to take the place of inferior machines which failed to make good by their performance in the field the promises made when they were sold.

"We invite the attention of all who wish to purchase machines this season to our splendid line and we feel assured that no one who buys one of ours will ever regret it, but will feel that he has got more than his money's worth.

"Our Improved Advance is the same as last year, the season's work not developing any point of improvement.

"Our Improved Prize mower we also present just as we made it last year, being so good as to need no change.

"The Dropper we have improved some, having altered the sheave in which the reel chain runs.

548 "The Improved Advance, a combined two-wheeled reaper and mower, with separate bars for reaping and mowing.

"This machine as improved last year by the substitution of a single frame and iron drag bar for the double frame in use prior to this time has proven itself better adapted to the wants of the farmer than any other self-raker made.

"The past severe harvest, like the spear of Ithuriel, revealed to the farmers the defects of the various cheap machines with which the market is flooded, and indeed tried severely the merits of some of the more pretentious, but proved conclusively to the fortunate possessors of the Improved Advance that they had a machine to be depended upon at all times and under all circumstances.

"No reaper can do better work than the Improved Advance did this year. No matter how hard to cut the grain was, no matter how badly lodged or tangled it may have been, this unrivaled implement was completely master of the situation. It repeatedly cut grain where other machines failed to do it.

"The Improved Prize mower, a two-wheeled, hinge-barbed grass-cutter.

"This implement has been growing in popularity since we first put it upon the market, and during the past season it has given universal satisfaction and gained hosts of friends.

"The only trouble we had with it was that we did not have enough to supply the demand. It is undoubtedly the best machine for cutting heavy grass and clover that is now made.

549 "On nice smooth meadow land, in moderate growth of tame grass, almost any of the light, cheap mowers, of which so many varieties are now made, will do fair work so long as they last, but even in such places our mower has proven its superiority, and on account of its great durability and the care used in selecting the material and doing the work, thereby avoiding the constant breakages which are so vexatious and expensive to the farmer, is in the end really cheaper than the frail things which cost less in the beginning.

"This mower can be driven into the heaviest and most matted grass and stopped and can then be started without backing, which is, perhaps, the greatest test of its power as a cutter that can be applied.

"Any farmer intending to purchase a mower this season will certainly neglect his own interests if he does not thoroughly post himself on the merits of our machine, and if he does this we are sure he will not fail to buy it.

"The Advance Dropper, a two-wheeled combined machine, with two bars for reaping and mowing.

"There are some sections of country to which this machine is better adapted than any other.

"A farmer who has but little grain to cut and a large amount of grass needs the mowing part of a combined machine more than the reaping part, and it is therefore to his interest to get a machine which is a good mower and has as light and cheap a reaping attachment as possible. To such farmers we can recommend
550 our dropper as the machine best adapted to answer their requirements.

"The dropper is attached to our mower, and the machine has a four-foot bar for mowing and a five-foot bar for reaping.

"We are making some improvements this year which make this machine even better than last year, and it already has the reputation of being the best machine of the kind in the market.

"When arranged as a mower it is identical with our Improved Prize mower, which every one knows to be a first-class machine."

4. From "The Farmers' Advance," February, 1877, the following:

"Our Improved Advance is unchanged, and needs no comment, as its record in the past speaks louder than words.

"Our Prize mower is also unchanged. That it is everything a farmer can wish for in the shape of a mower is sufficient reason for

our letting well enough alone, and offering it to you on its past meritorious record.

"The McCormick Improved Advance, a two-wheeled combined reaper and mower, with separate bars for reaping and mowing.

"We have not changed this machine in any particular from what it was last year, nor do we know of any point in it where it could be improved. The many testimonials we receive from all quarters of the country have so satisfied us as to its perfect working that we have not considered it desirable to spend any time uselessly in making changes.

551 "We do not deem it necessary that we should go into any lengthy comments on its record in the past harvest, but would only ask of any one wishing to buy a combined machine to read the testimonials we publish on this page, and make a thorough examination of the Improved Advance for himself, and we have no doubt but that he will select that machine in preference to all others.

"Remember that McCormick's Advance is the most perfect and simple, as well as durable, combined reaper and mower in the market—two perfect machines in one.

"Thousands of happy homes sing its praises and bring testimony of its works, whereby it has become distinguished.

"Remember that the McCormick Prize mower was awarded the first grand prize over all exhibitors (the Cross of the Legion of Honor) at Paris, France, in 1867, and in every harvest since then has proved itself worthy of that high distinction.

"The McCormick Improved Prize Mower, a two-wheeled, hinged bar grass-cutter.

"We place this machine before the public without change from last season. Its work during the past harvest has been all that we could hope for or desire, doing first-class work under all circumstances wherever a mower could be put to use.

"It has been lauded so much and its merits placed before the public in print so often that we feel as though there was
552 nothing left to say on the subject, except we again repeat a few of the many instances where it has met and defeated its competitors, and shown by its work that confidence placed in it is never wasted or misplaced.

"For cutting all kinds and conditions of grass and clover it cannot be surpassed."

5. From "The Farmers' Advance," January, 1879, the following:

"The McCormick Advance.

"This two-wheeled, combined self-raking reaper and mower has been a most popular machine for ten harvests past, and still continues to maintain its position among the host of self-raking reapers that are now in the market, and we intend that the season of 1879 shall record for it many new friends and fresh victories.

"As a self-rake reaper this machine will cut and deliver the grain

in sheaves upon the ground in a manner that cannot be beaten, leaving them in the best possible shape for the binders who follow after. It will pick up and cut down grain in a way that cannot be excelled by any other known machine. It is very strong and durable, being made of the very best material that can be procured, and will outwear almost any other machine that is made.

" It has two motions, a slow one for reaping and a quick one for mowing, is supplied with two mowing knives and one reap-
553 ing sickle, and has two bars, one for reaping, five-feet cut, the other for mowing, four feet cut.

"As a combined machine the McCormick Advance is the best machine for the farmer in the market; it is easily handled and will do good work where other makes of machines break completely down and prove miserable failures.

"All farmers wanting to purchase a combined reaper and mower for the harvest of 1879 will do themselves an injustice if they buy before inquiry into the merits of and the terms on which we offer the McCormick Advance."

6. From "The Farmers' Advance," May, 1879, the following:

"The McCormick Advance, as a combined self-rake reaper and mower, needs no comment, as its various superior qualities are well known to the farming community. Suffice it to say, it has all the McCormick characteristics of excellence, both in the quality of the materials it is manufactured from and in the manner and perfection of the work it does.

" The McCormick Single Advance, which has no mowing attachment, but is simply meant for grain-cutting, is the same as the reaping part of the combined Advance, and is just as excellent a machine.

" The McCormick Advance Dropper, with some few improvements we have made on it this year, will be found to be the very
554 essence of perfection, both as a grain and grass cutting machine, and is sure to please the purchaser."

7. From a pamphlet issued by the defendants in 1879, the following:

" The McCormick Advance.

"For ten years past we have been manufacturing the McCormick Advance, and in the vast number of them that we have sold during that time we have abundant proof of the high estimation in which they are held by the grain and grass growers of our entire country. For 1879 we shall place this machine in the market without making any material changes over last year. Indeed, either as a reaper or mower it has done such excellent work in the field for years back that there has been no ground or necessity for improvement in it. Its wide-spread past record is sufficient guarantee to the farmer of its excellent qualities as a combined reaper and mower, and we have great confidence that it will meet with a very large sale next season, and give the same degree of satisfaction to the purchaser that it always has in years gone by.

" No reaper can do better work than the McCormick Advance did

last year. No matter how difficult the grain was to cut, no matter how badly lodged or tangled it may have been, this unrivaled implement was completely master of the situation, and it frequently cut grain where other machines utterly failed.

555 "The McCormick Advance is a two-wheeled, wood-frame, rear-cut, self-rake reaper and mower combined. It requires two horses to work it, and is a light, easy running machine with no side draft, and in its balance it is very nicely adjusted, so that there is no weight on the horses' necks.

"The McCormick Advance is in reality two machines combined in one, having two bars of essentially different construction to suit the work required of either a reaper or mower—the one a five-feet bar, with malleable fingers and a serrated-edged sickle, the other a thin, flat bar four feet long (that lies as close to the ground as possible), with wrought-iron fingers, steel-lined, and a smooth-edged mowing knife. Two knives are furnished with each machine.

"As a self-rake reaper this machine will cut and deliver the grain in sheaves in better shape than any other self-rake reaper, from the fact that its rake, revolving with the reel, acts as a reel fan as it strikes the grain ahead of and draws it back across the sickle when its operation as a rake commences. This feature all farmers who have seen the machine fully appreciate, as it is readily understood that by such an action the grain is laid on the platform in better shape, and consequently can be and is raked into gavels that are much superior for binding to those raked by other styles of self rakes.

556 "For strength and durability we can place this machine against any machine made, and the testimony concerning its general excellence will bear us out in any praise we may indulge in concerning it.

"We ask the careful attention of all wishing to purchase a reaper this season to this excellent machine, feeling confident that any farmer studying it will become convinced that it is for his interest to purchase it in preference to others."

8. From a pamphlet issued by the defendants in 1880, the following:

"The McCormick Advance.

"If there can be any virtue claimed for a machine by reason of a good and well-founded record, gained in the harvest fields of eleven consecutive seasons, we can certainly claim a great deal of the true merit for our McCormick Advance combined reaper and mower, as it has, ever since the harvest of 1869, been each year making new friends and winning new victories on account of the most excellent work it always performs, either in grain or grass. We have sold a great many thousands of these machines in years gone by, and our patrons in all parts of the United States have expressed to us their appreciation of its various meritorious points by volumes of written letters, and wherever we have sold an Advance we feel quite certain that we have a friend to whom we may unhesitatingly refer any one who is desirous of making inquiries concerning it. The

557 working of this machine in the harvest fields of 1879 was all

4 Sheets-Sheet 1.

L. J. McCORMICK, W. R. BAKER & L. ERPELDING.

HARVESTERS.

No. 193,770. Patented July 31, 1877.

No. 379.
McCormick, et al.
v.
Whitmer, Admr.
p. 559

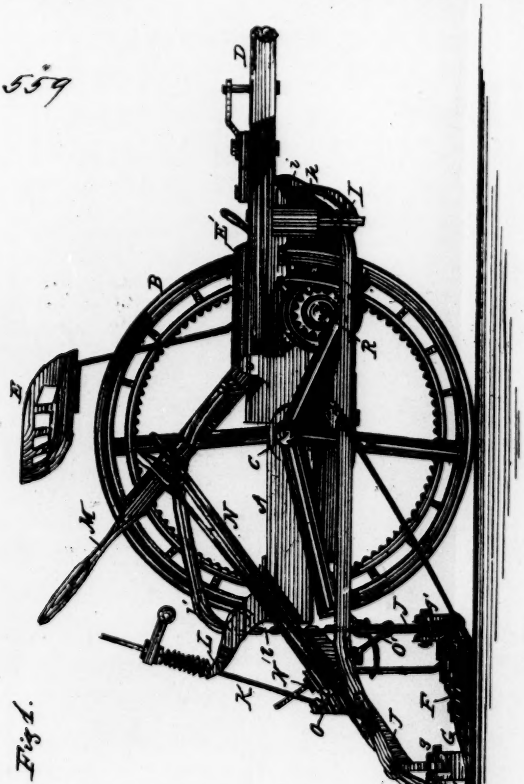

Fig. 1.

WITNESSES.
Harry King
Wm. J. Payson

By

INVENTOR.
L. J. McCormick Wm. R. Baker & L. Erpelding
Wm. D. Baldwin Their Attorney

4 Sheets-Sheet 2.

L. J. McCORMICK W R BAKER & L. ERPELDING.

HARVESTERS.

No. 193,770. Patented July 31, 1877.

No. 379.
McCormick et al.
v.
Whitmore, Adm'r
} b 560.

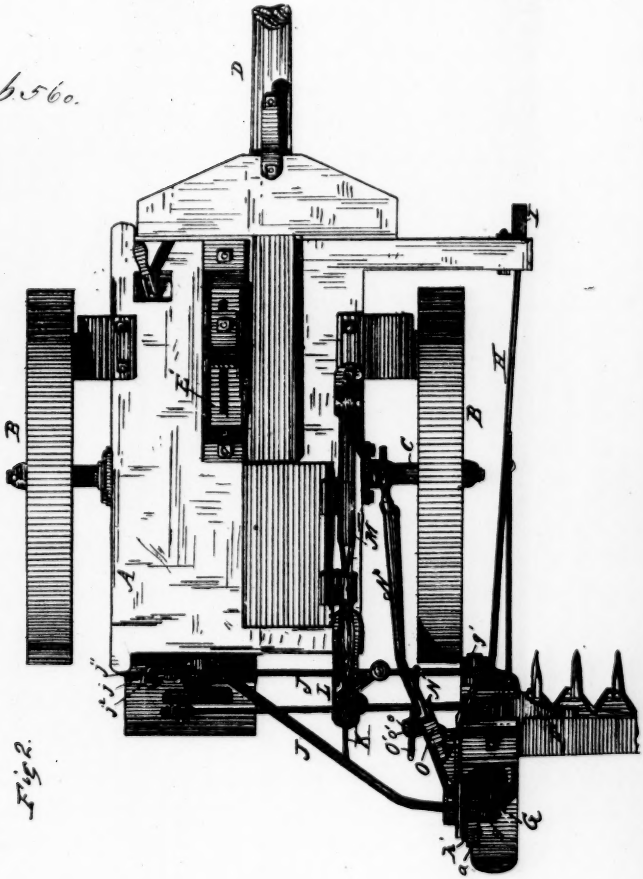

Fig. 2.

WITNESSES
Harry Young
Chas. J. Peyton

INVENTOR
L. J. McCormick, Wm. R. Baker & L. Erpelding
By their Attorney
Wm. D. Baldwin

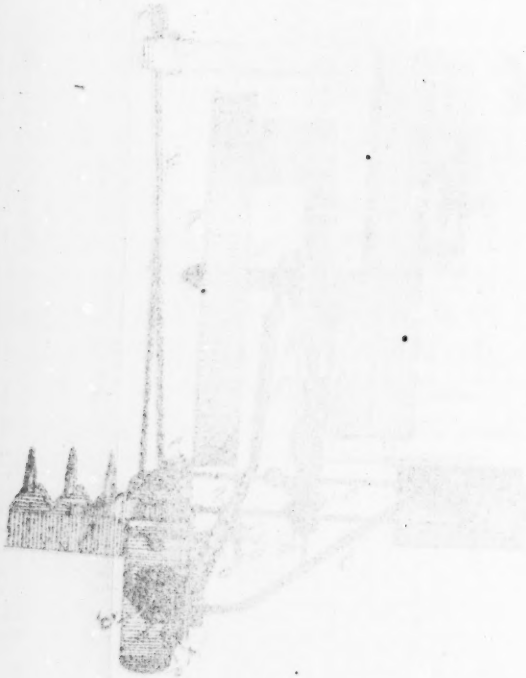

4 Sheets—Sheet 3.

L. J. McCORMICK. W R. BAKER & L. ERPELDING.

HARVESTERS.

No. 193,770. Patented July 31. 1877.

No. 379.
McCormick et al.
v.
Whitmer, Admr.
p. 561

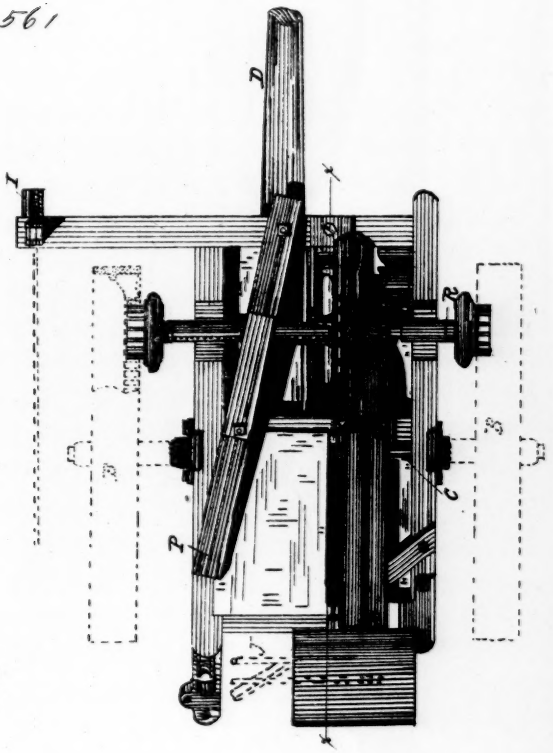

Fig 3.

WITNESSES
Harry King Del.
Wm J. Peyton

INVENTOR
L. J. McCormick Wm R. Baker & L. Erpelding
By their Attorney
Wm D. Baldwin

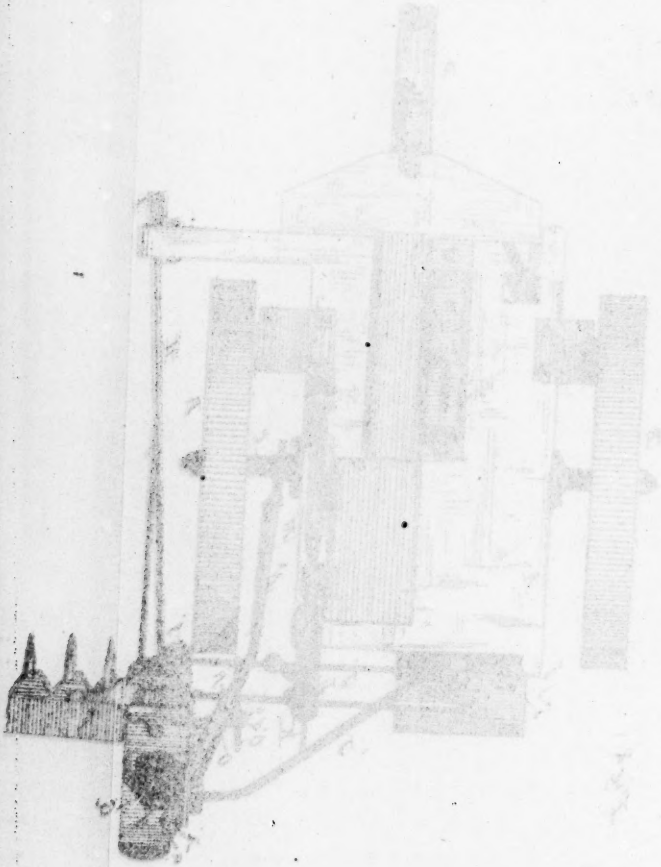

4 Sheets—Sheet 3.

L. J. McCORMICK, W. R. BAKER & L. ERPELDING.

HARVESTERS.

No. 193,770. Patented July 31, 1877.

No. 379.
McCormick et al.
v.
Whitmer, Admr.
p. 561

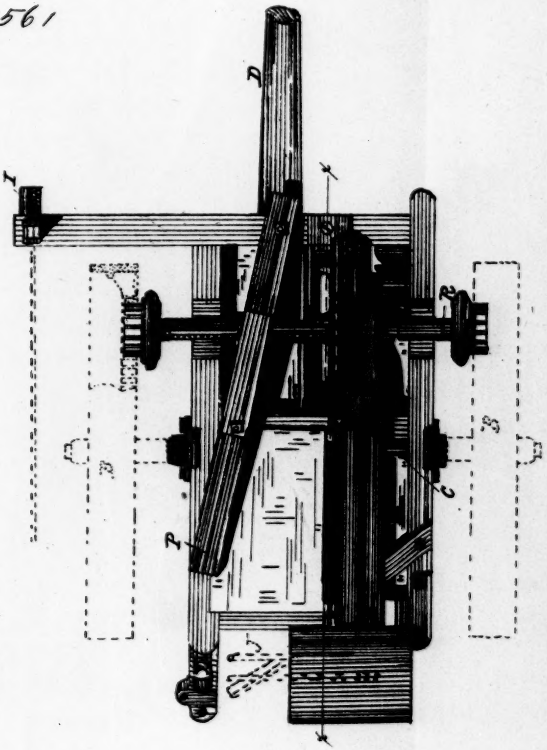

Fig 3.

WITNESSES
Harry King
Wm. J. Payton

INVENTOR
L. J. McCormick Wm. R. Baker & L. Erpelding
By their Attorney
Wm. D. Baldwin

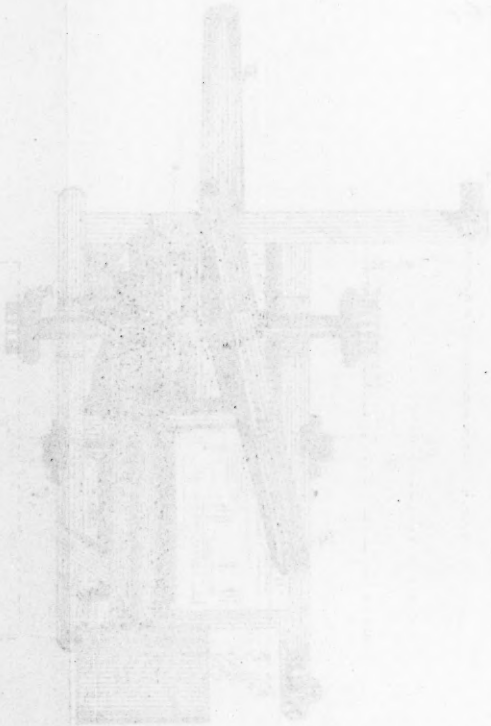

4 Sheets—Sheet 4.

L. J. McCORMICK, W. R. BAKER & L. ERPELDING.

HARVESTERS

No. 193,770. Patented July 31, 1877.

No. 379.
McCormick et al.
v.
Whitmer, Admr.
p. 562

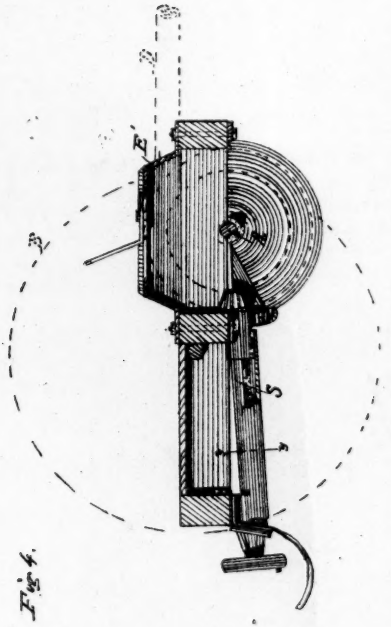

Fig. 4.

Fig. 5.

WITNESSES
Harry King
Wm. J. Taylor

INVENTOR
L. J. McCormick Wm. R. Baker & L. Erpelding
By their attorney
Wm. D. Baldwin

that we could possibly wish for, and, as in previous years, it frequently demonstrated that it was entirely master of the situation in the most difficult kinds of cutting; for where other machines would be compelled to pull out and give up the job this old stand-by would slash down the grain or grass to the great satisfaction of all interested parties.

"The McCormick Advance is a two-wheeled, wood-frame, rear-cut, self-rake reaper and mower combined.

"It requires two horses to run it, and is a light, easy running machine, well balanced, and has no side draft. It is in reality two machines combined in one, having two bars of essentially different construction to suit the work required of either a reaper or mower—the one a five-feet bar, supplied with malleable fingers and a serrated-edged sickle for grain, the other a thin, cold-rolled iron bar, four feet wide, with wrought-iron fingers, steel-lined, for grass. We furnish two grass knives with each mowing bar.

"By means of a crank (which may be seen in the cut) at the driver's right hand, the points of the guards and the reel may be thrown down to pick up lodged or leaning grain, and by the use of this contrivance the very worst kind of lodged or tangled grain cannot escape the sickle.

"As a mower the Advance is a rear-cut, jointed bar machine,
558 with a strong, quick motion, which is very quickly gotten up, requiring no backing in order to start in the heaviest kind of cutting. It is next to impossible to clog it down, and to show its strength and power purchasers have informed us that they have cut down patches of hazel brush with their machines without breaking them in the least.

"We can, without any hesitancy, guarantee the McCormick Advance to be, as far as strength, durability, and good work are concerned, as fine a machine as the market affords."

Endorsed: Filed July 21, 1884. W. H. Bradley, clerk.

(Here follows diagrams marked pp. 559, 560, 561, and 562.)

563 & 564 COMPLAINANT'S EXHIBIT MCCORMICK PATENT.

(2–175.)

DEPARTMENT OF THE INTERIOR,
UNITED STATES PATENT OFFICE.

To all persons to whom these presents shall come, Greeting:

This is to certify that the annexed is a true copy from the records of this office of the letters patent granted C. H. and L. J. McCormick July 31, 1877, No. 193,770, for improvement in harvesters.

In testimony whereof I, W. H. Doolittle, acting Commissioner of Patents, have caused the seal of the Patent Office to be hereunto affixed this eighth day of January, in the year of our Lord one thousand eight hundred and eighty, and of the Independence of the United States the one hundred and fourth.

[SEAL.] W. H. DOOLITTLE,
Acting Commissioner.

565 No. 193,770.

The United States of America to all to whom these presents shall come:

Whereas Leander J. McCormick, William R. Baker, and Lambert Erpelding, of Chicago, Illinois, have presented to the Commissioner of Patents a petition praying for the grant of letters patent for an alleged new and useful improvement in harvesters, they having assigned their right, title, and interest in said improvement to C. H. & L. J. McCormick, of same place, a description of which invention is contained in the specification, of which a copy is hereunto annexed and made a part hereof, and have complied with the various requirements of law in such cases made and provided; and whereas, upon due examination made, the said claimants are adjudged to be justly entitled to a patent under the law:

Now, therefore, these letters patent are to grant unto the said C. H. & L. J. McCormick, their heirs or assigns, for the term of seventeen years from the thirty-first day of July, one thousand eight hundred and seventy-seven, the exclusive right to make, use, and vend the said invention throughout the United States and the territories thereof.

566 In testimony whereof I have hereunto set my hand and caused the seal of the Patent Office to be affixed, at the city of Washington, this thirty-first day of July, in the year of our Lord one thousand eight hundred and seventy-seven, and of the Independence of the United States of America the one hundred and second.

[SEAL.] A. BELL,
Acting Secretary of the Interior.

Countersigned:
ELLIS SPEAR,
Commissioner of Patents.

567 UNITED STATES PATENT OFFICE.

LEANDER J. MCCORMICK, WILLIAM R. BAKER, and LAMBERT ERPELDING, of Chicago, Illinois, assignors to C. H. & L. J. McCormick, of same place.

Improvement in Harvesters.

Specification forming part of Letters Patent No. 193,770, dated July 31, 1877; application filed July 17, 1875.

To all whom it may concern:

Be it known that we, Leander J. McCormick, William R. Baker, and Lambert Erpelding, all of Chicago, in the county of Cook and State of Illinois, have invented certain new and useful improvements in harvesters, of which the following is a specification:

The subject-matter claimed will hereinafter specifically be designated.

In the accompanying drawings our improvements are shown as embodied in a two-wheel, hinged bar mowing machine.

Figure 1 is a view from the grain side of the machine, the cutting apparatus and a portion of one wheel being broken away to more clearly show the parts claimed; Fig. 2, a plan or top view,
568 the driver's seat being removed; Fig. 3, a bottom view, the cutting apparatus being removed; Fig. 4, a longitudinal sectional view of the support for the driver's seat, crank shaft, protecting plates, &c., and Fig. 5, a view in cross-section of the crank shaft and protecting plate on the line line *y y* of Fig. 4.

The main frame A is supported by driving wheels B B, mounted and turning on an axle, C, held in suitable bearings on the frame. A tongue, D, projects from the top side and front of the main frame. A seat, E, for the driver, is mounted on a box casting, E′, which forms a cover for the main bevel-gear wheel and is adjustable backwards and forward thereon by means of guide ledges and a slot and set screw.

It will be observed that the seat is mounted in advance of the main axle, the object of which is to enable the driver to see well in advance of the cutters and to counterbalance the weight of the parts on the rear of the machine.

The finger beam F is secured to the shoe G in the usual way. A drag bar, H, lies parallel with the drive wheels and has its front end curved upward to form a hook, *h*, which passes through a slot in a down-hanger, I, located on the inner front corner of the
569 main frame, in which it is pin-jointed, the extreme end of the hook entering a guide slot or recess, *i*, on the upper portion of the down-hanger, the object of which, while the drag bar is free to move up and down around its pivot, is to prevent it from turning over sidewise.

The rear end of the drag bar is bent inward and downward (Figs. 1 and 2), a sufficient space being preserved beneath it to allow the shoe and its joints to play freely, and terminates in a laterally projecting pin, *h′*, which enters a socket in a swiveling eye bolt, *a*, on the rear end of the shoe, and forms the pivot on which the shoe, and consequently the finger beam, rocks.

The shoe G is also provided in front and rear with lugs, *g g′*, to which are, respectively, pin-jointed the front and rear members of a forked coupling arm, J, the swiveling eye bolt *a* forming the pivot of the rear member. The end of this coupling arm is bend or curved like a "goose neck" to pass over the crank shaft, and terminates in a ball, *j*, working in a socket j^1 in the crank-box casting, the socket being covered by a cap, j^2, thus forming a ball-and-socket joint, which allows the finger beam to rise and fall and to rock freely without cramping.

570 The pressure of the cutting apparatus upon the ground is regulated by means of a link, *k*, hooked at one end to the rear fork or member of the coupling arm and passing through an overhanging bracket, L, mounted on the inner rear corner of the main frame, the link above the bracket being surrounded by a

spring, the tension of which may be regulated by a screw nut working on the link.

The cutting apparatus is raised or lowered by a chain, *l*, hooked to the front fork of the coupling arm, passing over a pulley journaled in the overhanging bracket L and connected by an arched link, *l'*, with a slotted lifting lever, M, pivoted on the main frame within convenient reach of the driver. It is obvious the range of lift of the cutting apparatus by the lever can be varied by attaching the link *l* to the lever nearer to or further from its fulcrum, and that, owing to its construction and manner of connection with the link, the link acts as a stop to limit the backward motion of the lever by abutting against the top of the slot in which it is pivoted. The cutting apparatus may be rocked on its swiveling pivot joint, and held in any desired position to adapt it to rough as well as smooth land by means of a rocking lever, N, pivoted to the drag bar
571 and extending to within convenient reach of the driver, the lever being provided with a spring detent, N, taking into a curved rack, O, also mounted upon the drag bar, a lifting link, O, hooked to the front member of the forked coupling arm, passing loosely through an opening in the extended portion of a bracket, O, mounted on the rocking lever, through which the detent works to engage the curved rack, the lifting link above this bracket being provided with an adjustable screw nut, *o*, whereby it will be seen that when the cutting apparatus is adjusted the screw nut will prevent its descent beyond its adjusted point until the detent is withdrawn from the rack while allowing it to rise to pass over obstructions.

Instead of this lifting link O, a chain might be used, and by the employment of a rigid strap the cutting apparatus, when adjusted by means of the rack, would be held in a fixed position.

We have found that the weight of the cutting apparatus on the inner rear corner of the main frame has the effect of springing and twisting the frame by which the boxes are tightened and the machine made heavy to move. This tendency is overcome by a diagonal brace, P, extending the entire length of the frame, its
572 front end being bolted to the under side of the frame preferably by the same bolt that passes through the tongue and front cross-piece, another bolt passing through the brace and center cross-piece, close to the main axle, a bolt at the rear end not being essential.

On the inner surface of the drive wheels are cast spur wheels, which mesh with and drive corresponding pinions mounted on a counter-shaft, R, turning in bearings on the frame in front of the main axle. This counter-shaft carries a beveled gear wheel which drives a corresponding pinion on the crank shaft S, the crank shaft being supported in suitable bearings and driving the cutters by a crank and pitman, as usual.

Suitable plates or castings surround the crank shaft and beveled gear wheels to protect them.

We have described our improvements as organized for operation as a two-wheeled, hinged bar mowing machine, but they are also

adapted for the reception of parts necessary to constitute a hand-raking or self-raking reaper.

We claim as our invention—

573 1. The combination, substantially as hereinbefore set forth, of the slotted and grooved down-hanger and the hooked front end of the drag bar, pivoted therein and guided and braced thereby.

2. The combination, substantially as hereinbefore set forth, of the shoe and the drag bar extending over and in rear of the shoe, and its swiveled pin connecting it with the rear end of the shoe, whereby the drag bar sustains the thrust of the shoe while leaving it free to rock on its hinges.

3. The combination, substantially as hereinbefore set forth, of the shoe, the drag bar extending over and in rear of the shoe, the swivel pin connecting the two, and the forked coupling arm, the front member of which is pivoted to the front of the shoe while its rear member is pivoted to the swivel pin of the drag bar, whereby great flexibility of movement and a firm bracing of the shoe is secured.

4. The combination, substantially as hereinbefore set forth, of the lateral brace or coupling arm attached to the front of the shoe, the drag bar hinged to the rear of the shoe, and the lifting lever pivoted on the drag bar and linked to the lateral brace to tip the cutters.

574 5. The combination, substantially as hereinbefore set forth, of the shoe, the forked coupling arm, the drag bar extending over and in rear of the shoe, the swivel pin connecting the two, the rocking lever and the detent mounted on the drag bar, and the adjustable link connection between the lever and coupling arm, whereby the shoe readily may be rocked or adjusted.

6. The combination, substantially as hereinbefore set forth, of the shoe, the drag bar extending over and in rear of the shoe, the swivel pin connecting the two, the forked coupling arm, the overhanging bracket on the frame, and the adjustable spring-tension link connecting the bracket and the rear member of the forked coupling arm, whereby the pressure of the shoe upon the ground may be regulated.

7. The combination, substantially as hereinbefore set forth, of the shoe, drag bar, the forked coupling arm, the overhanging bracket on the frame, the adjustable spring-tension link connecting

575 the bracket and the rear member of the forked coupling arm, and the chain, link, and lifting lever acting on the front member of the coupling arm, whereby the shoe is first rocked and then lifted by one continuous movement of the lever.

8. The combination, substantially as set forth, of the coupling arm, the chain attached thereto, the link attached to the chain, and the pivoted slotted lever in which the link is pivoted, whereby the link acts as a stop to the backward movement of the lever, while allowing it to move forward freely to lift the coupling arm.

In testimony whereof we have hereunto subscribed our names.

LEANDER J. McCORMICK.
WM. R. BAKER.
LAMBERT ERPELDING.

Witnesses:
R. NEWTON.
D. McINTYRE.

576 COMPLAINANT'S EXHIBIT WELSH MEMORANDA.

Conversation had with Werden Saturday, Sept. 11th, 1869.—Went to see Werden (Wm.) what he was going to do about Graham's machine. He (Werden) asked me why Graham did not come himself; that he (Graham) knew all about the matter; that it was none of Graham's business what he was going to do about the machine; that it was none of Graham's d——d business how many machines he made the next year, or whether he made a single one for the next five years. He (Werden) said he would not give a d—— for advertising; that Graham had it all his own way, and that Graham could have advertised if he saw fit; that he owed Graham nothing; that Graham owed him thousands of dollars, and had taken out of the store at the rate of one hundred dollars per month.

Monday, Sept. 13, '69.—Notified Werden by request of Graham that he must commence work on the 15th of October. Werden said that Graham might kiss his ass; that he would do as he d——d pleased; that he would not build a hundred machines the next year, and would, perhaps, not build any; that Graham was the captain, and while under his management had lost money and he (Werden) proposed to manage their own way.

Tuesday, Sept. 14, '69.—Demanded letters patent of Werden at request of Graham. Werden said he would not give them up because Graham had no right to them; said that Graham was always experimenting when the machine was good enough. Also notified him (Werden) that in consequence of his failure to perform his part of the contract in the past and of his declaration that he would not fulfill his contract that the contract was declared at an end by me as the attorney of Mr. Graham. Thereupon Werden said that Graham might kiss his ass and go to hell and help himself;
577 said he did not care what Graham did, but would do as he d——d, please, and that Graham might go on and get up another company and be d——d; did not care what Graham did.

Wednesday, Sept. 15, '69.—Werden told me voluntarily that Graham had managed the business for four years his own way, and they now proposed to manage it their own way; that they had sunk money and they proposed to get their money back again.

Thursday, Sept. 16th, '69.—That Graham by throwing obstacles in their way in the shape of lawsuits would only hurt his interest, not theirs. All that they wanted was to work cautiously and prudently until they recovered from their losses, and that in working for their interests they were working for Graham's; that they had

lived up to the letter of the contract and still proposed to do so in the future.

JAMES B. WELCH,
Attorney for Mr. Graham.

578 GRAHAM EXHIBIT B. L. S. B., Examiner.

Hatch & Slade, att'ys-at-law & patent att'ys, Bloomington, Ills.
Alexander & Mason, solicitors of American & foreign patents, 460 7th St., Washington, D. C.

Assignment of Patent Right.

Whereas Alvaro B. Graham, of Bloomington, McLean county, State of Illinois, did obtain three several letters patent of the United States for certain improvement in "harvesters," which letters patent bear date, respectively, No. 74342, February 11th, 1868; No. 76436, April 7th, 1868, & No. 87561, March 9th, 1869; and

Whereas Hugh Graham, of Bloomington, McLean county, State of Illinois, is desirous of obtaining said Alvaro B. Graham's entire interest therein: Now this indenture witnesseth, That for and in consideration of the sum of five hundred ($500) dollars to me in hand paid, the receipt of which is hereby acknowledged, I have granted, sold, and set over, and do hereby grant, sell, and
579 set over, unto the said Hugh Graham all the right, title, and interest which I have in the said inventions for the entire territorial limits of the United States of America, being my entire interest in & to said three letters patent hereinbefore mentioned, and in no other place or places, the same to be held and enjoyed by the said Hugh Graham for his own use and behoof and for the use and behoof of his legal representatives to the full end of the term for which the said letters patent are granted, as fully and entirely as the same would have been held and enjoyed by me had this grant and sale not been made.

In testimony whereof I hereunto set my hand and affix my seal this 12th day of August, 1870.

ALVARO B. GRAHAM. [SEAL.]

Sealed and delivered in presence of witnesses:
THOS. SLADE.
W. M. HATCH.

[(5). U. S. inter. revenue five-cent certificate. Aug. 12, 1870. A. G. B. (5).]

U. S. PATENT OFFICE.

Received for record Sept. 12, 1870, and recorded in Liber H 13, page 329, of transfers of patents.

580 In testimony whereof I have caused the seal of the Patent Office to be hereunto affixed.

[SEAL.] SAM'L A. DUNCAN,
Acting Com'r of Patents.

[Patent Office, Sep. 12, 1870.]
[Patent Office, Sep. 12, 1870.]

Ex'd: C. E. L.
Fee, $1; paid.

581 GRAHAM EXHIBIT C. Fred. C. Hall, Notary Public.

This indenture, made and entered into this 4th day of February, A. D. 1864, between Alvaro B. Graham, of the county of Lake and State of Illinois, party of the first part, and George Cleveland, of said county and State, party of the second part, witnesseth:

That whereas the said party of the first part has invented a combined reaping and mowing machine, known and called the "Champion machine," for which invention an application is about to be made to the Patent Office at Washington, D. C., for letters patent; and

Whereas the said party of the first part is desirous that the party of the second part shall engage in the manufacture of said machines:

Now, the party of the first part hereby covenants and agrees to and with the party of the second part that the party of the second part shall and may have the exclusive right to manufacture and sell said machines according to the present model and with
582 improvements thereon and thereto as the party of the first part may become hereafter the inventor of and entitled by law to letters patent therefor prior to the termination of this contract, which said right shall continue and be in force from the date hereof till the patent about to be applied for as aforesaid shall be of no effect by lapse of time: Provided, however, That in case any patent may be obtained for said machine or for any improvements thereon and thereto by the said party of the first part territorial and shop rights to use the same may be sold and granted by the parties hereto, as is hereinafter provided.

And the said party of the first part further covenants and agrees to and with the said party of the second part that he will protect and save harmless the said party of the second part against any and every claim which any party or parties may make in and to the right to manufacture and sale of said machines by reason of any agreement or contract made with the said party of the first part prior to the making and delivery of these presents.

583 And the said party of the first part further covenants and agrees to and with the said party of the second part that before letters patent shall be issued for said invention he will make such necessary and proper assignment thereof to the party of the second part that said patent may and shall issue to the parties hereto jointly, giving to them an equal undivided interest therein, and in case the said party of the first part shall hereafter invent any improvement upon the present model which may be patentable he shall, before obtaining letters patent therefor, make such proper and necessary assignment thereof to the said party of second part that the patent therefor may and shall issue to the said parties hereto jointly as aforesaid, and that the party of the second part shall have the right to use said subsequent invention in and about the manufacture and sale of said machine during the time this contract shall be in force, exclusively: Provided, That the party of the second part

shall have no interest in any invention of the said party of
584 the first part after this contract shall cease to be in force by any reason.

And the party of the first part further covenants and agrees to and with the party of the second part that he will work for the party of the second part in and about the manufacture of said machines and the repairing (if required) of the same for reasonable wages so long as the party of the second part may desire his services in the business of said manufacture and repair, and that he will devote his entire time to said business.

And the party of the first part further covenants and agrees to and with the said party of the second part that he will not in any manner interfere or intermeddle in the management of the party of the second part in and about the manufacture and sale of said machines or repairing the same, or in the sale of territory or shop rights or granting licenses for the manufacture and sale thereof in case a patent or patents is or are obtained as herein contemplated, or negotiate with any party or parties relative to any such sale or granting of such license, except in the absence of the party of the second part, and then such negotiations to be always subject to the approval of the party of the second part, or collect or receive any moneys arising therefrom, under pain and penalty of forfeiting to the said party of the second part his entire interest in said invention or inventions and contemplated patent or patents.

And in consideration of the covenants and agreements of
585 the said party of the first part the said party of the second part covenants and agrees to and with the said party of the first part that he will manufacture for sale and sell the same, if he can—fifteen or more of said machines—during the coming season, if said number of machines can be manufactured during said season with ordinary exertion on his part, and if the said parties shall have obtained a patent for said machine within one year from the date hereof, then the said party of the second part shall and will invest in said business of manufacture, repair, and sale of said machines the sum of fifteen thousand dollars to be used in said business annually, it being herein and hereby expressly understood and agreed by and between the said parties hereto that the said party of the second part may abandon said business of manufacture, repair, and sale of said machines at any time he may elect and terminate this contract after the coming season has elapsed, and after hav-
586 ing given to the party of the first part forty-five days' previous notice in writing of his intention to abandon said business and terminate this contract, and upon assigning to the said party of the first part in due form of law any and all right, title, and interest which the said party of the second part may at the time have in and to said invention for said machine or any improvements thereon and thereto made by the said party of the first part and coming within the terms of this contract by virtue of any patent or patents or otherwise.

And the said party of the second part covenants and agrees to and with the said party of the first part that he will pay the said party

of the first part reasonable wages for his labor so long as he may employ him in the business of manufacture and repair of said machines.

And the said party of the second part further covenants and agrees to and with the party of the first part that he will pay to the party of the first part one-half of the net profits realized from said
587 business of manufacturing, repairing, and selling said machines over and above the actual cost of manufacturing, repairing, and selling the same and losses sustained and suffered by reason of failure or inability to collect debts made in the sale and repair of said machines on credit, said costs to embrace all sums paid for licenses and rights to use any other person or person's invention in and about the construction of said machines, and interest at the rate of eight per cent. per annum on any surplus capital over and above the said sum of fifteen thousand dollars per annum, which the said party of the second part may choose to and may invest in the said business of manufacture, repairing, and sale of said machines, and also such a sum as would, at the rate of five hundred dollars per annum, accrue for the personal services of the party of the second part for such time and parcels of time during the existance of this contract as the said party of the first part shall not work for the said party of the second part in and about
588 said business, it being mutually understood and agreed that so long and for the time when the said party of the first part shall work for the said party of the second part as aforesaid for reasonable compensation the party of the second part may include in and as part of the costs of said manufacture, repairing, and sale of such machines such a sum for his personal services in said business as will be equal to the earnings of the said party of the first part, and that the said one-half of the net profits arising from the said business of manufacturing, repairing, and selling said machines agreed to be paid as aforesaid by the party of the second part to the party of the first part is agreed to be paid expressly for the sale and exclusive right to manufacture, repair, and sell said machines as aforesaid, and in consideration of the other covenants, agreements, and stipulations herein contained.

And in consideration of the premises it is mutually agreed and covenanted that neither party hereto shall dispose of any inter-
589 est he may have or may acquire in and to any patent or patents by reason of or contemplated in this contract, or grant licenses for the manufacture, repair, and sale of said machines, or grant shop rights for the same, without the written consent of the other party, under pain and penalty of forfeiting his entire interest and property in and to said patent or patents to the other party.

And it is further mutually covenanted and agreed that the expense of obtaining any patent contemplated herein shall be borne equally by the parties hereto, and shall be issued to him in the name and style of "Graham & Cleveland," if consistant with the rules and practice of said Patent Office.

And it is further mutually covenanted and agreed that the proceeds arising from the sale of territory or shop rights to manufacture,

repair, and sell said machines or any part or principle thereof or said machines with improvements as contemplated herein during the life of this contract shall be equally divided between the
590 parties hereto, said division to take place as soon as practicable after said proceeds are received, and that the said party of the second part shall have the entire management of said sales and negotiations therefor, except as aforesaid, and all payments on account thereof shall be made to and received by the said party of the second part.

And it is further mutually covenanted and agreed that the party of the second part shall pay to the said party of the first part the said one-half part of the net profits of said business of manufacturing, repairing, and sale of said machines for each and every year during the existence of this contract on the 10th day of January of each and every year, or as soon thereafter as the year's business can be settled up and the net proceeds thereof ascertained.

And it is further mutually covenanted and agreed that the said party of the second part may elect the place for carrying on said business, and that the covenants and agreements herein contained shall extend to and be obligatory upon the heirs, executors,
591 & 592 and administrators of the respective parties hereto.

And it is further mutually agreed and covenanted that the party of the second part may abandon said business and terminate this contract at the end of the coming season without giving the party of the first part any previous notice of his intention to abandon said business and terminate contract.

In witness whereof the parties have hereunto set their hands and seals the day and year first above written.

—— ——. [SEAL.]
—— ——. [SEAL.]

In presence of—
FRANCIS E. CLARKE.

Endorsed on back: The contract, of which the within is a true copy, is canceled and in the possession of the within-named Cleveland. Sept. 13, 1864. F. E. Clark, Esq.

593 COMPLAINANT'S EXHIBIT WATERMAN'S LICENSE.

This indenture, made and entered into this twenty-ninth day of January, in the year of our Lord one thousand eight hundred and seventy, between Alvaro B. Graham, of the city of Waukegan, in the county of Lake and State of Illinois, party of the first part, and Amos S. Waterman, of the same place, party of the second part, witnesseth:

That whereas the parties hereto did, on the sixth day of December, A. D. 1869, at the city of Waukegan aforesaid, make, execute, and deliver, each to the other, a certain article of agreement, contract, and license in reference to organizing companies with capital to manufacture, use, and vend, also to license other parties to manufacture, use, and vend, by royalty or otherwise, the whole

or any part thereof of the following-described machine; also that said Waterman might himself manufacture, use, and vend said machine, if he should choose or elect so to do, by paying to said Graham one-half the usual royalty and other rights and privileges to the said party of the second part licensed, granted, and conveyed by said Graham in reference to a certain harvester invented, patented, and owned by said Alvaro B. Graham, party of the first part, and commonly known as the Graham harvester, or reaper and mower, more particularly described in the letters patent and schedules issued to the said Alvaro B. Graham and numbered and dated at the United States Patent Office, reference hereby being had thereto, as follows, to wit: Numbered 74342 and dated February 11th, A. D. 1868; also numbered 76436, dated April 7th, A. D. 1868; also
594 numbered 87561, dated March 9th, A. D. 1869, and also all improvements or patents that might be thereafter made by said Graham, and also other valuable grants, licenses, covenants, and provisions therein contained, wherein it is mutually understood and agreed, by and between the parties hereto and thereto, that the net proceeds and profits arising and accruing from the said business aforesaid shall be mutually and equally divided between them, share and share alike.

Now, therefore, it is hereby mutually understood and agreed by and between the parties hereto that the following contract, agreements, and stipulations shall be instead and in lieu of the aforesaid contract, agreement, licenses, etc., of the said date of December 6th, A. D. 1869, as follows, viz:

That, for the consideration of the canceling of the aforesaid contract, agreement, licenses, and valuable conditions and provisions therein contained and the aiding, assisting at organizing a company at Waukegan, Illinois, with capital and to enlist capital in the manufacturing and licensing and vending the said Graham harvester, or reaping and mowing machine, and other valuable considerations therein, the following contract, covenants, and agreements are made and entered into by and between the parties hereto, viz:

The said Amos S. Waterman, of the second part, agrees to make and enter into an agreement and contract in company with one Jacob C. Bloom, of the city of Waukegan, conditioned to manufacture, license, and vend, and to license other parties or persons to manufacture, use, and vend, the said Graham harvester, or reaper and mowing machine, conditioned, among other things and obligations, to pay the said Alvaro B. Graham, patentee, etc., the sum of ten dollars royalty for each and every of said machines manufactured by said Bloom and Waterman or by any other person or
595 parties by authority of or license from them; also to manufacture not less than twenty-five of said machines for the year A. D. 1870, and not less than one hundred of said machines each and every year thereafter during the life or lapse of time of said patents aforesaid, or during the continuance or legal existence of the said contract and other conditions and penalties therein contained, reference hereby being had thereto, bearing even date herewith, which said contract and agreement aforesaid, at the date

hereof, is executed, signed, sealed, and delivered by the aforesaid parties hereto:

Now, therefore, in consideration of the promises hereof, the said Alvaro B. Graham, party of the first part, agrees and covenants to and with said Amos S. Waterman, of the second part, that the one-fourth (¼) part (twenty-five per centum) of the ten dollars royalty as aforesaid accruing to or arising from or under the said contract and agreements as aforesaid made and entered into between the said Jacob C. Bloom and Amos S. Waterman with said Alvaro B. Graham, and made binding upon their legal heirs, grantees, or assigns, shall inure to and be the separate property of the said Amos S. Waterman, and shall be due, owing, and payable at the same time and manner as is due, owing, and payable to said Graham by and under the said contract aforesaid between the said Jacob C. Bloom and Amos S. Waterman with Alvaro B. Graham, in all cases whatsoever providing and excepting the following contingency, viz:

In case there shall be a default or failure to manufacture the number of said machines for any year or years, as specified in said contract and agreement between said Jacob C. Bloom and Amos S. Waterman with Alvaro B. Graham, their heirs, grantees, leasees, or assigns, and the forfeiture or lieu thereof of paying the ten dollars royalty on said machines to said Graham by and under the said contract shall arise or accrue, that then and in that event and case the said Amos S. Waterman shall be legally and absolutely released and discharged fully, and is hereby released and discharged, legally, absolutely, and fully, from all such failures or forfeitures which may arise or accrue in any contingency whatever, which shall also extend to and be obligatory upon the heirs, executors, administrators, grantees, and assigns of the parties hereto, it being expressly understood and agreed by and between the parties hereto that said Waterman shall not be held liable or responsible to said Graham or his heirs, grantees, or assigns for any failures or forfeitures or dues or demands for the non-payment of royalties in any event whatsoever.

596

And it is also understood and agreed between the parties hereto that said Amos S. Waterman shall, and hereby does, release, forego, and discharge his said one-fourth (¼) part (twenty-five per centum) of said ten dollars royalty as aforesaid accruing, rising, and inuring to him in the following contingency and event, viz:

In the contingency or event that a failure by said Bloom and Waterman in their aforesaid contract, or by their heirs, grantees, leasees, or assigns, to manufacture the least or lowest number of said machines provided for in their said contract in any one year or pay the ten dollars royalty thereon on the said lowest or least number of said machines, as provided for in their said contract, and the said Waterman shall be legally and fully discharged from his said share of said liability and responsibility under the said contract for royalty as aforesaid at the time and to the extent of said Waterman's liability under the said contract between said Bloom and Waterman with said Graham as aforesaid, which said release and discharge shall be fully and legally made by said Graham, his heirs,

legatees, grantees, assigns, or otherwise, that then and in that event the one-fourth part (or twenty-five per centum) or said Waterman's one-fourth part or per centum upon the amount of said default or failure shall be discharged to that amount and extent for
597 the said year as aforesaid; but in all other events, cases, or contingencies whatsoever that may arise the said one-fourth part interest (or twenty-five per centum) on all royalties whatsoever accumulating, accruing, or arising under or by virtue of the said contract between said Bloom and Waterman with said Graham, their heirs, legatees, grantees, or assigns, of every name and nature whatsoever, whether said Waterman shall invest any capital, take any joint stock, or otherwise, in said contemplated company or companies or not, or whether said Waterman shall hereafter sell, convey, assign, or set over, or in any other way or manner dispose of or become dispossessed of his said interest in, to, or under said contract and agreements between said Bloom and Waterman with said Graham or not, the said Waterman's one-fourth part interest as aforesaid, viz., twenty-five per centum, shall inure to and be the separate, special, and individual interest, possessions, and property of the said Waterman, except in the contingency and special case hereinbefore mentioned.

It is also further mutually understood and agreed by and between the parties hereto that this contract and agreement shall extend to and be obligatory upon our heirs, executors, administrators, grantees, and assigns.

Dated, signed, sealed, and delivered at the date first above written.

A. B. GRAHAM. [SEAL.]
AMOS S. WATERMAN. [SEAL.]

COMPLAINANT'S EXHIBIT POWER OF ATTORNEY NO. 1.

Know all men by these presents that I, Hugh Graham, of the city of Bloomington, in the county of McLean and State of Illinois, have made, constituted, and appointed, and by these presents do make, constitute, and appoint, A. B. Graham, now of Chicago,
598 Illinois, my true and lawful attorney, for me and in my name, place, and stead to transact business for me in connection with my patent finger-bar attachment anywhere in the United States of America, giving and granting unto my said attorney full power and authority to do and perform all and every act and thing whatsoever requisite and necessary to be done in and about the premises as fully, to all intents and purposes, as I might or could do if personally present, with full power of substitution and revocation, hereby ratifying and confirming all that he, my said attorney, or his substitute, shall lawfully do or cause to be done by virtue thereof.

In witness whereof I have hereunto set my hand and seal the ninth day of January, one thousand eight hundred and seventy-three.

HUGH GRAHAM. [SEAL.]

Sealed and delivered in presence of—
O. B. HARRIS.

STATE OF ILLINOIS, } ss:
McLean County, }

On the 9th day of January, eighteen hundred and seventy-three, before me, a notary public in and for the city of Bloomington, in the county of McLean and State of Illinois, appeared Hugh Graham, personally known to me to be the real person whose name is subscribed to the foregoing power of attorney as having executed the same, and then acknowledged the execution thereof as his free act and deed.

Given under my hand and seal.

[SEAL.] OLIVER B. HARRIS,
Notary Public.

U. S. PATENT OFFICE.

Rec'd for record February 24, 1873, and recorded in Liber M[16], page 243, of transfers of patents.

599 In testimony whereof I have caused the seal of the Patent Office to be hereunto affixed.

J. M. THATCHER,
Acting Commissioner of Patents.

COMPLAINANT'S EXHIBIT POWER OF ATTORNEY NO. 2.

Know all men by these present that I, Hugh Graham, of the city of Bloomington, in the county of McLean and State of Illinois, have made, constituted, and appointed, and by these presents do make, constitute, and appoint, Alvaro B. Graham, of Chicago, Illinois, my true and lawful attorney, for me and in my name, place, and stead, to represent me and act for me in all business in any way connected with or arising out of any of the following letters patent of the United States granted to the said Alvaro B. Graham, or matters connected therewith, viz: No. 74342, dated February 11, 1868; No. 76436, dated April 7, 1868, and No. 87561, dated March 9, 1869, and particularly to prosecute suits and make settlements for infringements of said letters patent or any of them, to grant licenses for the use of any of the inventions or improvements secured thereby, and to sign all contracts and papers of whatsoever kind that may be considered necessary in any of said matters, giving and granting unto my said attorney full power and authority to do and perform all and every act and thing whatsoever requisite and necessary to be done in and about the premises as fully, to all intents and purposes, as I might or could do if personally present, with full power of substitution and revocation, hereby ratifying and confirming all that my said attorney or his substitute shall lawfully do or cause to be done by virtue thereof.

In witness whereof I have hereunto set my hand and seal this twenty-second day of January, A. D. 1881.

[SEAL.] HUGH GRAHAM.

600 STATE OF ILLINOIS, } ss:
McLean County, }

I, William Weyand, a notary public in and for said county, in the State aforesaid, hereby certify that Hugh Graham, personally known to me to be the same person whose name is subscribed to the foregoing instrument, appeared before me this day in person and acknowledged that he signed, sealed, and delivered the said instrument as his free and voluntary act for the uses and purposes therein set forth.

In witness whereof I have hereunto set my hand and notarial seal this 22d day of January, 1881.

[SEAL.] WILLIAM WEYAND,
Notary Public.

Received for record January 31, 1881, and recorded in Liber J[26]., page 46, of transfers of patents.

In testimony whereof I have caused the seal of the Patent Office to be hereunto affixed.

[SEAL.] E. M. MARBLE,
Commissioner.

COMPLAINANT'S EXHIBIT WAYNE COMPANY'S LICENSE.

Memorandum of agreement made and entered into between Alvaro B. Graham, of Girard, Kansas, general licensee, and Hugh Graham, of Bloomington, Illinois, owner of the patent granted to Alvaro B. Graham, No. 74342, patented February 11, 1868, of the first part, and The Wayne Agricultural Co., of Richmond, Indiana, of the second part.

Whereas the party of the first part hereby agrees to license the party of the second part to manufacture their mowing machine embraced in patent No. 74342, issued in favor of Alvaro B. Graham February 11, 1868, and to sell and have the same sold in the territory of Ohio, Indiana, Illinois, Missouri, Iowa, Kansas, Arkansas,
601 Texas, Kentucky, and Tennessee, and in addition to such right in said States to have also the right to sell in any other territory until otherwise disposed of by the party of the first part, this license to continue during the lifetime of the patent and all extensions thereof. The party of the first part hereby agrees to give the party of the second part full and exclusive right and control of the manufacturing and sale of said machine in the territory above specifically stated; also to defend them, at their own expense, from all piracy and infringement in said territory, and to make their claim good to such patent from all who may contest and litigate their rights thereto.

In consideration of the above license and privilege, the party of the second part hereby agrees to pay to the party of the first part a royalty of three dollars each on all the machines which they make and sell, said royalty to be settled for on the twentieth day of January of each year following the sale of said machines.

This license is understood to also include the patent spring coupling spring for pitman covered by the patent No. 76436, issued to said Alvaro B. Graham April 7th, 1868, said spring to be used exclusively on the mowing machine above licensed.

As witness the hands of the parties hereto the 21st November, 1878.

HUGH GRAHAM,
By A. B. GRAHAM,
Att'y-in-Fact.
ALVARO B. GRAHAM.
WAYNE AG'L COMPANY,
P'r L. L. LAWRENCE, *Pr.*

Witness:
THADDEUS WRIGHT.

602 COMPLAINANT'S EXHIBIT WAYNE COMPANY AGREEMENT.

Whereas Alvaro B. Graham and Hugh Graham, by an instrument in writing bearing even date herewith, have licensed the Wayne Agricultural Co. of Richmond, Indiana, to manufacture and sell a mowing machine patented by said Alvaro B. Graham February 11th, 1868, and numbered 74342:

Now, therefore, the said Alvaro B. Graham and Hugh Graham do hereby agree to pay to the said Wayne Agricultural Co. one-half of whatever cost they may be at in getting up the models and patterns with which to make said machine, said one-half cost to be deducted out of the royalty coming to said Grahams; and, further, should the Wayne Agricultural Co. at any time deem it expedient to discontinue the manufacture of said mower, then said Grahams shall allow and pay over to said Wayne Agricultural Co. the remaining one-half cost of preparing and getting up said models and patterns for said machine. The Wayne Agricultural Co. hereby agree that if they find this mowing machine to be equal to their expectations in suiting their trade that they will, after the season of 1879, manufacture it exclusively as a mower, and that they will do all in their power to supply the wants of the trade therewith; but if they shall find that it will not answer their purpose as aforesaid, then they hereby obligate themselves to cancel the license above referred to.

As witness the hands of the parties hereto this 21st November, 1878.

HUGH GRAHAM.
By A. B. GRAHAM,
Att'y-in-Fact.
ALVARO B. GRAHAM.
WAYNE AG'L CO.,
P'r L. L. LAWRENCE, *Pr.*

Witness:
THADDEUS WRIGHT.

603 COMPLAINANT'S EXHIBIT WAYNE COMPANY'S LETTER.

RICHMOND, IND., *Sept'r 7th*, 1878.

M. A. Morse, Chicago.

D'R SIR: Your letter of August 24th came during the absence of our Mr. Lawrence. He has just returned and we hasten to reply. Our board has had the matter under consideration, and, after looking all over the ground, they came to the conclusion that the offer of $3 royalty is really as much as we can afford to pay and work up the sale of the machine as it should be.

Mr. Lawrence is desirous of seeing you as early as he can. He leaves for the Ohio State fair on Monday; from there he goes to the Kansas City fair. If you happen to be there he will be glad to see you. Mr. L. wishes us to ask you that you be sure and secure the mower we saw near Chicago, so that in case we should make an arrangement with you we may have the mower for use, etc.

Very truly yours,

WAYNE AGRICULTURAL CO.

COMPLAINANT'S EXHIBIT ANN ARBOR COMPANY LICENSE.

Agreement, made this tenth day of September, between Hugh Graham, of Bloomington, Ill., and A. B. Graham, of Chicago, Ill., party of the first part, and the Ann Arbor Agricultural Co., a company duly organized and existing under and by virtue of the laws of the State of Michigan, party of the second part, witnesseth:

The party of the first part hereby licenses and empowers the party of the second part, its successors and assigns, and all parties who may hereafter own or operate the works now operated by it at Ann Arbor, Michigan, to use the improvements and combinations described in letters patent No. 74342, dated February 11, A. D.
604 1868, and issued to Alvaro B. Graham, and particularly mentioned in the first and second claims thereof, to the full end of said letters patent and all extensions thereof.

The party of the first part demands as a license or royalty fee for the considerations above named the sum of five (5) dollars for each and every machine manufactured by the party of the second part containing the improvements set forth in the letters patent named above; but this loyalty or license fee shall be subject to a discount of forty (40) per cent., or a reduction to three (3) dollars for each machine, provided the party of the second part faithfully performs its part of this contract and makes all payments faithfully and promptly, as hereinbelow provided for.

The party of the first part hereby agree to protect and save harmless the party of the second part in the future manufacture of said machines as against any and all claims under the patent to Allen Sherwood of October 5, 1869, No. 95522, so long as the party of the second part shall manufacture said machines in accordance with the sample machine shown to the said Alvaro B. Graham, at Ann Arbor, Mich., on the 9th day of Sept., 1880.

The party of the second part, in consideration of these premises and covenants on the part of the party of first part, agrees to make full and true returns to the party of the first part on the first day of each November, during the existence of this contract, of the number of mowers manufactured and sold by it containing said improvements and not previously reported, and, if desired, to permit the party of the first part to, then examine its books personally or by others in reference to said business.

The party of the second part agrees to pay to the party of the first part, as a royalty or license fee under said patent, the sum named above for each and every machine manufactured and sold by it containing said improvements or combinations so long as the
605 above letters patent No. 74342 are in force and are sustained by the courts, to whom the legality of such matters pertain, such royalty to be paid between November 1st and December 1st of each year upon all machines previously manufactured and sold and not paid for.

The party of the second part agrees that it will mark on said machines manufactured by it under this agreement "patented," with the date of said patent, in proper form.

The party of the second part may terminate this agreement at any time upon the sending of a notice so to do and the payment of all royalties or license fee upon all machines previously manufactured under this agreement and not already paid for by it.

Upon the failure of the party of the second part to make returns or pay royalties as herein provided for thirty days after the dates named above, the party of the first part may terminate this license by serving a written notice upon the party of the second part or any of its officers, and having this—such notice—recorded in the Patent Office at Washington, but the party of the second part shall not thereby be discharged from any liability to the party of the first part for any license fees due at the time of serving or recording said notice.

A good and sufficient bond, satisfactory to the party of the second part, shall be given for the faithful performance and undertakings of this agreement on the part of the party of the first part.

In witness whereof the parties above named have caused these presents to be executed this tenth day of September, 1880.

HUGH GRAHAM,
By A. B. GRAHAM.
ANN ARBOR AGRICULTURAL CO.,
By JOHN FINNEGAN, *Manager*.

606 COMPLAINANT'S EXHIBIT GENEVA LAKE COMPANY LICENSE.

This agreement, made this 27th day of January, A. D. 1881, between Hugh Graham, of Bloomington, Illinois, and Alvaro B. Graham, of Chicago, Illinois, of the first part, and The Geneva Lake Crawford Manufacturing Company, of Geneva Lake, Wisconsin, a corporation organized and existing under and by virtue of the laws of the State of Wisconsin, of the second part, witnesseth:

1. The party of the first part hereby license and empower the party of the second part, its successors in business, and any and all parties who may hereafter own or operate the works now operated by it at Geneva Lake, Wisconsin, to use the improvement in harvesters described in letters patent of the United States No. 74342, issued to Alvaro B. Graham February 11, 1868, and particularly mentioned and claimed in the first and second claims thereof, to the full end of the term of said letters patent and all extensions thereof.

2. The party of the second part hereby agrees to make full and true returns to the party of the first part on the first day of December in each year, during the existence of this license, of the number of machines manufactured and sold by it containing the improvements mentioned in said claims or either of them (not previously reported), and, if desired, to permit the party of the first part to then examine its books personally or by others in reference to said business.

The party of the second part also agrees that it will pay to the party of the first part, within thirty days from the date of each report, a royalty or license fee of five dollars for each and every machine sold by it containing the improvements mentioned in said two claims and which have not been previously reported and paid for; but if the party of the second part shall make true and
607 prompt reports and pay all unpaid royalties at the time of each report, and generally shall faithfully carry out and perform all the covenants and agreements herein contained on its part, it shall be entitled to a discount or reduction of forty per cent. on said royalty—that is to say, the party of the first part in such case will make a reduction of two dollars per machine.

In case the party of the second part manufactures or sells any machines containing the improvements mentioned in the first claim of said patent, but not the improvement mentioned in the second claim, then it agrees to pay for such machines a royalty or license fee of four dollars per machine; but if it shall make prompt returns and payments as above provided for it shall be entitled to a discount or reduction of one dollar and fifty cents per machine—that is to say, the party of the first part in such case will accept two dollars and fifty cents for each of said machines.

Upon the expiration of said patent or the termination of this license, if the same shall be terminated before said patent expires, the party of the second part agrees to pay all unpaid royalties on the machines previously manufactured by it after the date hereof, whether such machines have been sold or not.

3. The party of the second part agrees that it will mark all of said machines manufactured by it "patented," with the date of said patent, in proper form.

4. If the party of the second part shall at any time cease to manufacture or sell said machines or fail to pay royalties or perform any of the agreements on its part herein contained for a period of sixty days after the payments or agreements before mentioned or any of them are stipulated to be made or performed, then the party of the first part may at their option terminate this license by serving a

written notice to that effect upon the party of the second part, or by having such notice recorded in the Patent Office at Washing-
608 ton; but the party of the second part shall not thereby be discharged from any liability to the party of the first part for any license fees due at the time of the serving or recording of said notice.

5. This license is made and accepted without prejudice to any of said parties in respect of any existing rights or privileges, legal or otherwise, and is to constitute no waiver of the same.

In witness whereof said parties have caused these presents to be executed the day and year first above written.

THE GENEVA LAKE CRAWFORD MANUFACTURING COMPANY,
By JOHN HASKINS, *President.*
HUGH GRAHAM,
By ALVARO B. GRAHAM, *Att'y-in-Fact.*
ALVARO B. GRAHAM.

It is hereby understood and agreed that if said Geneva Lake Crawford Manufacturing Company or its successors or assigns shall remove their manufactory from Geneva Lake aforesaid this license shall still be and remain valid in the hands of said company, its successors or assigns, after removal as aforesaid.

Dated the 27th day of January, 1881.

HUGH GRAHAM,
By ALVARO B. GRAHAM,
Att'y-in-Fact.
ALVARO B. GRAHAM.

COMPLAINANT'S EXHIBIT REMINGTON LICENSE.

This agreement, made this 13th day of June, A. D. 1881, between Hugh Graham, of Bloomington, Illinois, and Alvaro B. Graham, of Chicago, Illinois, of the first part, and the Remington Agricultural Company (composed of Eliphalet Remington, Philo Remington, and Samuel Remington) of Ilion, New York, of the second part, witnesseth:

609 1. The party of the first part hereby license and empower the party of the second part, their heirs, executors, administrators, and assigns, and any and all parties who may hereafter own or operate the works now operated by them at Ilion, N. Y., to manufacture, sell, and use the improvement in harvesters described in letters patent of the United States No. 74342, issued to Alvaro B. Graham February 11, 1868, and particularly mentioned and claimed in the first and second claims thereof, during the term of said letters patent and all extensions thereof.

2. The party of the second part hereby agree to make full and true returns to the party of the first part on the first day of December, in each year during the existence of this license, of the number of machines manufactured and sold by them containing the improvements mentioned in said claims, or either of them (not previously

reported), and, if desired, to permit the party of the first part to then examine their books, personally or by others, in reference to said business.

The party of the second part also agree that they will pay to the party of the first part, within thirty days from the date of each report, a royalty or license fee of five dollars for each and every machine sold by them containing the improvements mentioned in said two claims, and which have not been previously reported and paid for.

But if the party of the second part shall make true and prompt reports and pay all unpaid royalties at the time of each report, and generally shall faithfully carry out and perform all the covenants and agreements herein contained on their part they shall be entitled to a discount or reduction of forty per cent. on said royalty—that is to say, the party of the first part in such case will make a reduction of two dollars per machine.

In case the party of the second part manufacture or sell any
610 machines containing the improvements mentioned in the first claim of said patent, but not the improvement mentioned in the second claim, then they agree to pay for such machines a royalty or license fee of four dollars per machine; but if they shall make prompt returns and payments, as above provided for, they shall be entitled to a reduction or discount of one dollar and fifty cents per machine—that is to say, the party of the first part in such case will accept two dollars and fifty cents for each of said machines.

Upon the expiration of said patent or the termination of this license, if the same shall be terminated before said patent expires, the party of the second part agree to pay all unpaid royalties on the machines previously manufactured by them, whether such machines have been then sold or not.

3. The party of the second part further agree that they will mark all of said machines manufactured by them "patented," with the date of said patent, in proper form.

4. If the party of the second part shall at any time fail to pay royalties as above provided or to perform any of the agreements on their part herein contained for a period of sixty days, then the party of the first part may, at their option, terminate this license by serving a written notice to that effect upon the party of the second part or any member thereof; but the party of the second part shall not thereby be discharged from any liability to the party of the first part for any license fee due at the time of the serving of said notice.

5. Whereas the party of the second part now report and admit that exclusive of machines sold to the Geneva Lake Crawford Manufacturing Company of Geneva Lake, Wisconsin, and the Wayne Agricultural Company of Richmond, Indiana, they have manufactured and sold thirteen hundred and fifty mowing machines containing said patented improvements since the date of the
611 release heretofore granted to them, to wit, April 15, 1873, for which thirteen hundred and fifty machines they are now willing to pay the royalty above specified, the discount of forty per cent. being allowed:

Now, therefore, in consideration of four thousand and fifty dollars ($4,050.00) in hand paid, the receipt whereof is hereby acknowledged, the party of the first part hereby release and forever discharge the said party of the second part, and each of them, from any and all liability on account of the past infringement of said letters patent or manufacture, use, or sale of said patented invention.

But it is expressly understood and agreed that this release shall in nowise enure to the benefit of the said Geneva Lake Crawford Manufacturing Company or Wayne Agricultural Company; on the contrary, the royalty above specified being paid on and for the thirteen hundred and fifty machines sold to other parties, it is distinctly understood that, in making this settlement, the party of the first part do not waive or relinquish any of their legal rights against either of said companies, but reserve to themselves the right and privilege of enforcing all their legal claims against each of them on account of all machines sold by them in infringement of said letters patent, whether such machines were manufactured by the party of the second part or not.

In witness whereof said parties have hereunto set their hands and seals the day and year first above written.

HUGH GRAHAM, [SEAL.]
By ALVARO B. GRAHAM, *Att'y-in-Fact.*
ALVARO B. GRAHAM. [SEAL.]
REMINGTON AGRICU'L CO., [SEAL.]
By PHILO REMINGTON.

612 COMPLAINANT'S EXHIBIT BURRELL ASSIGNMENT.

Whereas Alvaro B. Graham, of Chicago, Illinois, and Hugh Graham, of Bloomington, Illinois, have heretofore commenced suit in the circuit court of the United States for the northern district of New York against the Warrior Mower Company of Little Falls, N. Y., and others for infringement of the first and second claims of United States letters patent No. 74342, issued to the said Alvaro B. Graham February 11, 1868, for an improvement in harvesters; and whereas, in addition to the "Warrior mowers" manufactured by said company at Little Falls and particularly involved in said suit, said company, or Frank Bramer, has agreed to protect and save harmless Gammon & Deering, of Chicago, against any and all claims for infringement of said patent arising out of their manufacture and sale of seventeen hundred and forty-seven (1,747) "Warrior mowers," but no further; and whereas David H. Burrell, of said Little Falls, is desirous of purchasing the claim involved in said suit relating to machines manufactured at said Little Falls and the claim against said Gammon & Deering on account of said seventeen hundred and forty-seven machines, together with any and all other claims of every kind and nature which we now have or may hereafter have against the said Warrior Mower Company, it officers or agents, for infringements of said patent:

Now, therefore, in consideration of twelve thousand dollars ($12,000)

to us in hand paid, the receipt whereof is hereby acknowledged, we, the said Alvaro B. Graham and Hugh Graham, hereby sell, assign, transfer, and set over to the said David H. Burrell the claim involved in said suit relating to machines manufactured at said Little Falls and the claim against Gammon & Deering for infringements committed by them by their manufacture and sale of seven-
613 teen hundred and forty-seven machines, but not by others, and any and all other claims of every kind and nature which we now have or may hereafter have against the said Warrior Mower Company, its officers or agents, for infringements of said patent.

And, for the consideration aforesaid, we hereby make, constitute, and appoint the said David H. Burrell our true and lawful attorney, for us and in our names, place, and stead (but at his own expense and for his own use and benefit) to settle and collect said claims, and to grant to said company and its successors and any and all parties who may hereafter operate its works in Herkimer county, N. Y., full license and authority to continue the manufacture, use, and sale of the improvements described and claimed in said patent during the term for which the same was granted, and all extensions thereof, giving and granting to the said Burrell full power and authority to do and perform every act and thing whatsoever necessary or requisite to be done in the premises, as fully to all intents and purposes as we might or could do if personally present, hereby ratifying and confirming all that our said attorney may lawfully do or cause to be done by virtue hereof.

But it is understood and agreed that the said Burrell shall not make any settlement or grant any license by virtue hereof (except for a gross sum) at less than five dollars per machine for the improvements specified in the first and second claims of said patent, such royalty to be subject, at his option, to a reduction of forty per cent. in consideration of prompt payments, etc.; and, also, that if he shall ever commence or prosecute any suit or suits to enforce or collect said infringement claims, or on account of any of the matters aforesaid, he shall retain our own attorneys and allow them to conduct said suit or suits and direct all the proceedings therein.

And, for the consideration aforesaid, we hereby covenant
614 and agree to and with the said David H. Burrell that we are the sole owners of said patent and have full power and lawful authority to execute this agreement and power of attorney in manner aforesaid, and that we will protect and save harmless the said David H. Burrell and his licensees hereunder against any and all claims by other parties for infringements of said patent No. 74342, heretofore or hereafter committed.

In witness whereof we have hereunto set our hands and seals this fourth day of August, A. D. 1881.

ALVARO B. GRAHAM. [SEAL.]
HUGH GRAHAM, [SEAL.]
By ALVARO B. GRAHAM,
Att'y-in-Fact.

I agree to all the foregoing.

DAVID H. BURRELL.

MERRICK FREEMAN, *Witness.*

COMPLAINANT'S EXHIBIT GLASS AGREEMENT.

This agreement, made this 13th day of January, 1882, between Hugh Graham, of Bloomington, Illinois, and Alvaro B. Graham, of Chicago, Illinois, of the first part; Albert J. Glass (vice-president and general manager of the Janesville Machine Company), of Chicago, Illinois, of the second part, and the said Janesville Machine Company, a corporation organized and existing under and by virtue of the laws of the State of Wisconsin, of Janesville, Wisconsin, of the third part, witnesseth:

1. In consideration of the granting to them of a license or shop right under the Glass patent hereinafter mentioned and of the sum of five hundred dollars to them in hand paid, the receipt whereof is hereby acknowledged, the party of the first part hereby license and empower the party of the third part to manufacture the improvements in harvesters described in letters patent of the United
615 States No. 74342, issued to Alvaro B. Graham February 11, 1868, and to use such improvements on the machines built by it at the works which it now operates at said Janesville, but not on machines built elsewhere, during the term of said patent. This license shall not be in any way assignable, nor shall other parties be associated with the licensee in exercising the privileges hereof without the written consent of the parties of the first part.

2. In consideration of the granting of said license as aforesaid the party of the second part hereby licenses and empowers the party of the first part to manufacture the improvements in harvesters described in letters patent of the United States No. 72016, issued to James H. Glass and Albert J. Glass December 10, 1867, at one shop in Cook county, Illinois, but not elsewhere, during the term of said patent. This license shall not be in any way assignable, nor shall other parties be associated with the licensees in exercising the privileges thereof without the written consent of the party of the second part.

3. The party of the third part hereby agrees that it will mark all the machines "patented," with the date of said Graham patent, in proper form, which it may hereafter manufacture under the license hereby granted, and the party of the first part hereby agree that they will mark all the machines "patented," with the date of said Glass patent, in proper form, which they may hereafter manufacture under the license hereby granted to them.

4. If the said Graham patent No. 74342 should ever be extended then it is agreed that upon the request of the third party a license under the first and second claims thereof shall be granted to the said party of the third part, and that under such license the party of the third part shall pay to the said party of the first part a royalty or license fee of five dollars per machine for each machine

made during such extended term containing the improve-
616 ments of inventions mentioned and claimed in said first and second claims, such royalty to be subject to a reduction of forty per cent. if true reports and prompt settlements shall be made at the times specified in said license and in consideration thereof. Unless said parties agree otherwise, said license shall be substantially in the form of the one granted by said party of the first part, January 27, 1881, to the Geneva Lake Crawford Manufacturing Company of Geneva Lake, Wisconsin.

In witness whereof said parties have executed these presents in duplicate the day and year first above written.

ALVARO B. GRAHAM. [SEAL.]
HUGH GRAHAM, [SEAL.]
By ALVARO B. GRAHAM,
His Attorney-in-Fact.
ALBERT J. GLASS. [SEAL.]
[CORPORATE SEAL.] THE JANESVILLE MACHINE CO.,
J. D. REXFORD, *Pres't.*

COMPLAINANT'S EXHIBIT JOHNSTON RELEASE.

This agreement, made this 11th day of April, A. D. 1882, between Alvaro B. Graham, of Chicago, Illinois, and Hugh Graham, of Bloomington, Illinois, of the first part, and the Johnston Harvester Company, of Brockport, New York, of the second part, witnesseth:

Whereas letters patent of the United States No. 74342 were issued to the said Alvaro B. Graham February 11, 1868, for an improvement in harvesters, which letters patent are now owned by the party of the first part; and

Whereas the Johnston Harvester Company, party of the second part, has manufactured and sold harvesters which the party of the first part claim contain some of the improvements described and claimed in said letters patent, and suit has been commenced against it on account thereof, but it denies the validity of said patent,
617 and that it has ever infringed the same; and

Whereas, concessions being made on both sides, said parties have agreed upon a compromise of said suit and of all matters connected therewith or in anywise in controversy between them:

Now, therefore, in consideration of ten thousand dollars ($10,000.00) to them in hand paid, the receipt whereof is hereby acknowledged, the said party of the first part hereby license and empower the said party of the second part, its successors and assigns, and any and all parties who may hereafter own or operate the works now operated by it at said Brockport, to manufacture and sell the improvements and inventions described and claimed in said letters patent No. 74342 during the term of said letters patent and all extensions thereof.

And for the consideration aforesaid the said party of the first part hereby release and discharge the said party of the second part, its officers and agents, and each of them, from any and all liability on

account of the past manufacture, sale, or use of the improvements and inventions described and claimed in said letters patent or any of them; and, further, they agree to dismiss said suit now pending as aforesaid.

The said party of the second part hereby agrees that if it manufacture any machines containing said patented inventions under this license it will mark the same "patented," in due form, with the date of said patent.

In witness whereof said parties have caused these presents to be executed in duplicate the day and year first above written.

ALVARO B. GRAHAM.
HUGH GRAHAM,
By ALVARO B. GRAHAM,
His Att'y-in-Fact.
JOHNSTON HARVESTER CO.,
C. A. SHERWOOD, *Sec'y.*

618 COMPLAINANT'S EXHIBIT WAYNE COMPANY'S NOTICE.

To the Wayne Agricultural Company, Richmond, Indiana:

In consequence of your failure to manufacture machines or pay royalties, as required by the contract or license of November 21st, 1878, under patent No. 74342, issued to Alvaro B. Graham February 11, 1868, for an improvement in harvesters, heretofore existing between your company and ourselves, we hereby revoke said contract or license and declare the same to be forever canceled and annulled.

Richmond, Indiana, December 6th, 1880.

HUGH GRAHAM,
By ALVARO B. GRAHAM,
Att'y-in-Fact.
ALVARO B. GRAHAM.

E. W. ECKHARD.

COMPLAINANT'S EXHIBIT WAYNE COMPANY SETTLEMENT.

Whereas Alvaro B. Graham, formerly of Girard, Kansas, but now of Chicago, Illinois, and Hugh Graham, of Bloomington, Illinois, heretofore, to wit, on the 21st day of November, A. D. 1878, granted to the Wayne Agricultural Company of Richmond, Indiana, a right or license to manufacture and sell certain of the improvements in harvesters described and claimed in letters patent of the United States No. 74342, issued to the said Alvaro B. Graham February 11, 1868, and in letters patent of the United States No. 76346, issued to the said Alvaro B. Graham April 7, 1868, in the States of Ohio, Indiana, Illinois, Missouri, Iowa, Kansas, Arkansas, Texas, Kentucky, and Tennessee, which license was afterwards, to wit, on the 16th day of December, 1880, recorded in the United States Patent Office in Liber A[26]; and whereas a controversy has arisen, upon which suit is pending, as to whether said license is now in force or of any
619 validity, and a settlement thereof has been agreed upon and made between said parties:

Now, therefore, said parties hereby agree and acknowledge and declare, each to the other, that said license and all the agreements and covenants therein contained, and all other contracts of whatsoever kind heretofore existing between said parties, have been, and hereby are, cancelled, revoked, rescinded, and forever annulled; and in consideration of one dollar and other good and valuable considerations to it in hand paid, the receipt whereof is hereby acknowledged, the said The Wayne Agricultural Company have sold, assigned, transferred, and set over to the said Hugh Graham all the right, title, and interest now or heretofore owned or claimed by it in and to said letters patent No. 74342 and 76436, and in and to all claims and demands of every kind for past infringements of said letters patent, or for any other matter or thing whatsoever connected therewith, the same to be held, enjoyed, and collected by the said Hugh Graham to the full end of the term of said letters patent and all extensions thereof, as fully and in the same manner as if the license and agreements above mentioned had never been made.

And in consideration of one dollar to them in hand paid, the receipt whereof is hereby acknowledged, the said Alvaro B. Graham and Hugh Graham do hereby release and discharge the said The Wayne Agricultural Company from all claims or demands they or either of them have against said company or the officers or agents thereof, except the obligations this day given; and they hereby release and discharge the said The Wayne Agricultural Company from the payment of any royalties or the payment of any profits or damages for the manufacture, sale, or use of mowing machines containing the improvements covered by said letters patent Nos. 74342 and 76436 or either of them, except as to the said obligations this
620 day given; and the said Alvaro B. Graham and Hugh Graham do hereby covenant and agree that they will protect and save harmless the said The Wayne Agricultural Company, its officers and agents, and any and all persons who have bought or used mowing machines manufactured or sold by said company containing said improvements, or either of them, from any claims or demands, damages or recoveries, arising or growing out of the manufacture, sale, or use of any of said mowing machines. This, of course, does not refer to any claims that may be made under other patents owned by third parties.

In witness whereof the said The Wayne Agricultural Company has caused these presents to be executed by its president and its corporate seal to be hereto affixed, and the said Alvaro B. Graham and Hugh Graham have hereto set their hands and seals, this 13th day of January, A. D. 1882.

[CORPORATE SEAL.] WAYNE AGRICULTURAL CO.,
By L. L. LAWRENCE, *Pr.*
ALVARO B. GRAHAM. [SEAL.]
HUGH GRAHAM, [SEAL.]
By ALVARO B. GRAHAM,
His Att'y-in-Fact.
THADDEUS WRIGHT,
Sec. Wayne Ag'l Co.

Received for record January 19, 1882, and recorded in Liber R[27], page 291, of transfers of patents.

In testimony whereof I have caused the seal of the Patent Office to be hereunto affixed.

[SEAL.] V. D. STOCKBRIDGE,
Acting Commissioner.

621 COMPLAINANT'S EXHIBIT BANNING'S LETTER.

CHICAGO, *March* 19, 1881.

Messrs. C. H. & L. J. McCormick, Chicago.

GENTLEMEN: This is to inform you that the master's report in the case of Hugh Graham *v.* Geneva Lake Crawford Manufacturing Company was filed in the clerk's office of the United States circuit court for the eastern district of Wisconsin on the 23d ultimo, and that it is our intention to ask the court to confirm such report and enter a final decree thereon at the earliest possible day. So far as the complainant and ourselves are concerned, it will give us pleasure to consent that your counsel may be heard in opposition to such report, if you desire to have them oppose its confirmation, and, if you desire it, we will inform you whenever the case is set for hearing. As you know, this suit is founded on the patent to A. B. Graham, No. 74341, issued February 11, 1868.

Yours respectfully, BANNING & BANNING.

COMPLAINANT'S EXHIBIT GENEVA LAKE SUIT.

Circuit Court of the United States, Eastern District of Wisconsin.
In Equity.

HUGH GRAHAM
vs.
THE GENEVA LAKE CRAWFORD MANUFACTURING COMPANY.

To the judges of the circuit court of the United States for the eastern district of Wisconsin:

622 I, Edward Kurtz, the master to whom it was referred under the interlocutory decree herein to ascertain, state, and report to the court an account of the gains, profits, and advantages which the defendant has received or which have arisen or accrued to it from its infringement of the letters patent of complainant mentioned in the said decree and of the damages which the complainant has suffered thereby, do respectfully report as follows:

That I have been attended by Ephraim Banning, Esq., of counsel for the complainant, and E. H. Bottum, Esq., of counsel for the defendant, and have taken in evidence the testimony of Edward Cheney and Alvaro B. Graham and various documentary evidence on behalf of the complainant, and the testimony of Edward Cheney on behalf of the defendant, all of which is herewith filed. From such evidence I find, as matters of fact—

1. That since its organization in 1875 the defendant has manu-

factured seven hundred and forty-seven (747) mowing machines known as "Crawford mowers," as described in the Burdick & Le Roy patent of November 12, 1872, and in addition thereto has sold eight hundred and twenty-three (823) mowing machines of the same kind manufactured by other parties, so that in all the defendant has manufactured and sold fifteen hundred and seventy (1,570) of said Crawford mowers, all of which, as heretofore held by the court, infringe the first and second claims of the complainant's said patent.

2. That the defendant has also manufactured and sold two hundred and sixteen (216) "combined machines," which are claimed by complainant's counsel to infringe said two claims of the complainant's patent, but which are different in construction from said Crawford mowers, and are not mentioned or referred to in the opinion of the court heretofore filed in this cause. I have not considered or passed on the question whether these combined machines
623 infringe said patent, but merely report the number thereof and, as stated further on, the amount of royalty due therefor in case the court holds that they infringe said two claims.

3. That the complainant depends upon his royalties or license fees for his compensation for the use of said patented invention, and that he has an established tariff or rate of license fees therefor, to wit, five dollars ($5.00) for each machine containing the improvements mentioned and claimed in the first and second claims of his said patent.

None of the licenses granted by the complainant, and which are introduced to prove his rate of royalty, provide for a license fee of less than five dollars a machine, except the one to the Wayne Agricultural Company; this provides for three dollars a machine. But it appears that in this case a royalty of five dollars was at first demanded by complainant, but owing to special circumstances, and particularly to the fact that, as the patented machine had not been in the market for several years, the licensees would have to introduce it and build up the trade—a reduction was made. The licensees evidently considered the difficulties of introducing the machine sufficient to afford a proper ground for the complainant's making a substantial reduction, for in a letter which formed a part of the negotiations it said: "The offer of $3 royalty is really as much as we can afford to pay and work up the sale of the machine as it should be." In addition to this, it appears that, at the time this license was granted, manufacturers did not understand or concede the full scope of complainant's patent, and hence were unwilling to engage in the manufacture of the patented mowers. In view of all this, I do not think that complainant's royalty ought to be limited or fixed by this license. (See Sickles *v.* Borden, 3 Blatchford, 544, and Campbell *v.* Barclay, 5 Bissell, 179.)

624 It appears, also, that nothing was ever done under this license, and that it has been revoked, and for these reasons I consider that it should not now be allowed any weight or influence in determining the rate of complainant's royalty. (See Bussey *v.* Excelsior Manufacturing Co., 17 O. G., 744.)

No sufficient evidence has been presented to enable me to report

an account of the gains, profits, and advantages accruing to the defendant from its use of said patented invention.

I consequently find that the complainant has earned a royalty, as above stated, of five dollars ($5.00) per machine on fifteen hundred and seventy (1,570) mowers of the kind heretofore held by the court to infringe the first and second claims of his said patent, and on two hundred and sixteen combined machines, in case the court holds that the same infringe said claims, and that the non-payment of such royalty represents the damages suffered by complainant by reason of the infringement of the first and second claims of said patent by the defendant.

I find and report, then, that complainant is entitled to recover from the defendant seven thousand eight hundred and fifty dollars ($7,850.00) for said fifteen hundred and seventy Crawford mowers, and, in case the court holds them to infringe said two claims, one thousand and eighty dollars ($1,080.00) for said two hundred and sixteen combined machines. In this latter case, then, I find that the complainant is entitled to recover $8,930.00; but if the court holds that said combined machines do not infringe said two claims, then I find that the complainant is entitled to recover seven thousand eight hundred and fifty dollars ($7,850.00).

All of which is respectfully submitted.

EDWARD KURTZ, *Master.*

Endorsed: Filed February 23, 1881. Edw. Kurtz, clerk.

625 United States Circuit Court, Eastern District of Wisconsin.
In Equity.

HUGH GRAHAM
vs.
THE GENEVA LAKE CRAWFORD MANUFACTURING COMPANY.

Exceptions taken by the defendant to the report made herein by Edward Kurtz, Esq., the special master to whom it was referred under the interlocutory decree herein, to ascertain, state, and report to the court an account of the gains, profits, and advantages derived from the infringement of complainant's patent mentioned in said decree.

First exception. For that said master in said report found as a a fact that said defendant has manufactured and sold 1,570 of said Crawford mowers, all of which infringe the first and second claims of said patent, whereas said master should have found that said defendant had manufactured 747 of said machines and had sold 823 of the said machines which were made by others.

Second exception. For that said master in said report found as a fact that the defendant has also manufactured and sold 216 combined machines, whereas the said master should have found nothing whatever upon said point, the same being irrelevant.

Third exception. For that said master in said report found as a fact that said complainant depends upon his royalties or license fees

for his compensation for the use of said patented invention, and that he has an established tariff or rate of license fees therefor, to wit, $5 for each machine containing the improvements men-
626 tioned and claimed in the first and second claims of his said patent, whereas said master should have found that during the time of said infringement and now said complainant has no fixed royalty or tariff, and that complainant had never recovered or received any license fees whatever.

Fourth exception. For that said master in said report found as a fact that none of the licenses granted by complainant provide for a license fee less than five dollars, whereas said master should have found that said complainant had granted license for much less than five dollars per machine.

Fifth exception. For that said master in said report found that no sufficient evidence had been presented to enable him to report an account of the gains, profits, and advantages accruing to defendant from its use of said patented invention, whereas said master should have found that said defendant had made no gains, profits, or advantages from the use of said invention.

Sixth exception. For that said master found as a conclusion of law that said complainant has earned a royalty, as above stated, of five dollars per machine on fifteen hundred and seventy mowers and on the number of 216 combined machines if the court shall hold that the same infringe said patent, whereas said master should have found that complainant had earned no royalties whatever.

Seventh exception. For that said master found that complainant is entitled to recover from defendant $7,850 if said 216 combined machines are adjudged to not infringe said patent and $8,930 if they do infringe, whereas said master should have found that said complainant is only entitled to recover nominal damages against said defendant.

Eighth exception. And said defendant excepts to each and
627 every finding of fact and conclusion of law in said master's report as being contrary to the facts as shown by the evidence and the law applicable to the case.

March 24th, 1881.

FLANDERS & BOTTUM,
Defendant's Solicitors.

Endorsed: Filed March 24, 1881. Edw. Kurtz, clerk.

UNITED STATES OF AMERICA, }
Eastern District of Wisconsin, } *ss:*

At a stated term of the circuit court of the United States of America for the eastern district of Wisconsin, begun and held according to law, at the city of Milwaukee, in said district, on the first Monday (being the third day) of January, A. D. 1881.

Present and presiding: The Honorable Charles E. Dyer, district judge.

On the eighty-fifth day of the said term, to wit, on the tenth day of May, A. D. 1881, the following proceedings were had, to wit:

HUGH GRAHAM
vs.
THE GENEVA LAKE CRAWFORD MANUFACTURING COMPANY. } In Equity.

This day came the parties, by their counsel, and, on consideration of the exceptions of the defendant to the master's report herein and the arguments of counsel thereon, it is ordered by the court that said report be, and hereby is, modified so as to charge the defendant a royalty or license fee of three dollars on each machine manufactured or sold by the defendant which infringed the complainant's patent, together with interest from October 11, 1880, the date of the interlocutory decree herein, instead of a royalty or license fee of five dollars on each machine, as reported by the master, and that the defendant be not charged in this suit with royalty on the 216
628 so-called "combined" machines mentioned in the master's report, and that to that extent the said exceptions to the said report be, and hereby are, sustained;

And it appearing by said report that the defendant manufactured seven hundred and forty-seven (747) of said machines and sold eight hundred and twenty-three (823) which were manufactured by others, making fifteen hundred and seventy (1,570) in all, on which the defendant is liable to pay royalty at the rate of three dollars each, amounting to $4,710.00, and interest from Oct. 11, 1880, at 7 per cent., is $192.29, making a total of $4,902.29—

It is thereupon ordered, adjudged, and decreed by the court that the complainant do have and recover of the defendant, The Geneva Lake Crawford Manufacturing Company, the said sum of four thousand nine hundred and two dollars and twenty-nine cents, together with his costs in this cause, taxed at one hundred and eighty-seven dollars and twenty-eight cents, and, in default of payment of the same within ten days, that he have execution for the same.

By the court:

CHARLES E. DYER, *Judge.*

629 United States Circuit Court, Eastern District of Wisconsin.
In Equity.

HUGH GRAHAM
vs.
THE GENEVA LAKE CRAWFORD MANUFACTURING COMPANY.

Messrs. Banning & Banning, for complainant; Mr. E. H. Bottum, for defendant.

DYER, *J.:*

In a case of the character of this the theory and meaning of the law is that the complainant shall recover the actual damages which he has sustained by reason of the infringement. In arriving at such damages it is held that where the patentee does not desire to retain a close monopoly of his invention the amount of the license fee which he has fixed in his dealings with other parties may be con-

sidered a proper compensation in damages where the character of the infringement does not justify exemplary damages. I have examined with care all the cases cited in which the rule just stated is enunciated, and uniformly they are cases where the license fee or royalty was fixed without question by the patentee and was well established; and the difficulty in the present case is in determining whether Graham had an established price for a license while the defendant was manufacturing and selling its infringing machine which can be adopted as a measure of actual damages within the principle laid down by the authorities. This is the pinch of the case, and I have been not a little perplexed to know just what the court should do in disposing of the exceptions to the master's report. Undoubtedly
630 the complainant should not have his claim reduced to nominal damages. That, I think, would be manifestly wrong.

Not much satisfactory light can be extracted from the Waterman and Waterman & Bloom contracts. The two contracts first made have been lost and cannot be produced. The one of date Jan. 29, 1870, is in evidence. They all, according to the evidence, provide for the payment of a royalty of $10 on each machine, but they appear to have contained various provisions and qualifications to cover contingencies, which materially affected their character as licenses by which an absolute license fee was fixed. The contract in evidence contains numerous provisions and conditions intended evidently to secure the introduction to public notice and use of the Graham invention and providing for the return to Waterman of certain proportions of the royalty upon the happening of certain contingencies; and I am inclined to look upon all of these agreements made with Waterman and Waterman & Bloom as rather partaking of the nature of efforts to secure the manufacture of the machine and its introduction into public use than as unqualified licenses, fixing a license fee which could be accepted as establishing, within the language of the court in Seymour *v.* McCormick, the average of actual damages sustained by the patentee when his invention should be used without his license.

By the arrangement with the Bloomington Co., which was verbal, it is said that a royalty of $10.00 was to be paid, but nothing was ever done by that company and nothing was ever realized by Graham.

By the agreement with the Wayne Agricultural Company a royalty of $3.00 was to be paid, and the license included something more than the invention in question. Nothing was done under this license, and it was afterwards revoked.

By the license granted to the Ann Arbor Agricultural
631 Company a royalty of $5.00 was to be paid, subject, however, to a reduction to $3.00 if the company should faithfully perform the contract on its part and should make prompt payments as the contract requires. This license is understood to be now in force, and it is evidently the license upon which complainant's counsel depends as establishing a license fee of $5.00, and upon which the master also relied in adopting that amount as measuring the complainant's damages. It is to be observed, however, of this

license that it was granted pending this suit, and only about a month before it was decided, and, therefore, it can hardly be claimed that it proves a license fee established before this case was commenced and while the defendant was infringing. However that may be, the question is, whether, if the complainant has established a license fee at all which should govern in the present controversy, it may not be said to be $3.00 with as much force as it may be said to be $5.00.

As we have seen, the license to the Wayne Company provided for a royalty of $3.00. True, it was revoked and abandoned, and it has been held that the price for which an inventor in a single instance may have sold his rights to certain territory is not a criterion by which to determine the value of his patent or the damages sustained from its infringement. But in a case like the present, where it is a close question whether it can be said that the patentee has established a fixed and positive license fee or royalty at all, it seems to me that this license may be looked at as throwing light upon the value which the inventor has put upon the right to manufacture his machine, so far as it is to be considered in disposing of the present case.

Further, we find that by the license to the Ann Arbor Company the royalty of $5.00 is subject to be reduced to $3.00 if the company performs its contract, and the legal presumption is that the company will perform.

632 Now, in view of this state of the case, has not the patentee really established $3.00 as his license fee as effectually, for present purposes, as it may be said he has established $5.00 as such fee, and even more effectually? I admit that upon the facts presented any course of reasoning by which a conclusion may be sought on this question of damages is not very satisfactory. In other words, it is not easy in such a case as this to determine what is precisely just and right between the parties, but on the whole I have concluded to somewhat reduce the amount which the master has allowed. I will put the license fee on each machine at $3.00, as in the light of the evidence before me most nearly measuring or approximating the compensation in damages to which the complainant is entitled; and in arriving at this conclusion I take also into consideration the fact that a large number of the machines in question were not manufactured by the defendant, but were purchased for sale from other manufacturers.

The master has found that the defendant has manufactured 747 machines and has sold 823 machines manufactured by other parties, all of which infringe complainant's patent, making, in all, 1,570 machines to be included in an estimate of damages. The 216 other machines spoken of in the master's report are not here considered or included. A royalty or license fee of $3.00 on each machine, if paid on 1,570 machines, would make an aggregate of $4,710.00, and on that sum I shall also allow interest at 7 per cent. from the date of the entry of the interlocutory decree, which was Oct. 11, 1880; such interest amounts to $192.29, so that the total amount to be

be allowed is $4,902.29. To the extent thus indicated the exceptions to the master's report will be sustained, and decree accordingly.

UNITED STATES OF AMERICA,
Eastern District of Wisconsin, } ss:

633 I, Edward Kurtz, clerk of the circuit court of the United States of America for the eastern district of Wisconsin, do hereby certify that I have compared the writings annexed to this certificate with their originals now on file and remaining of record in my office, and that they are true copies of such original and correct transcripts therefrom, being copies of the master's report, exceptions to same, final decree, and opinion of the court on the said exceptions in the case of Hugh Graham *v.* The Geneva Lake Crawford Manufacturing Co., in equity.

In testimony whereof I have hereunto set my hand and duly affixed the seal of the said court, at the city of Milwaukee, in said district, this seventeenth day of October, in the year of our Lord one thousand eight hundred and eighty-two, and of the Independence of the United States the 107th.

[SEAL.] EDWARD KURTZ, *Clerk.*

COMPLAINANT'S EXHIBIT WAYNE COMPANY SUIT.

In the Circuit Court of the United States, District of Indiana, for the May Term, 1881. June 29, 1881.

ALVARO B. GRAHAM *et al.*
vs.
THE WAYNE AGRICULTURAL COMPANY *et al.* } 7259.

Before Honorable Walter Q. Gresham, judge.

To the honorable the judges of the circuit court of the United States for the district of Indiana:

634 Alvaro B. Graham, of the city of Chicago, in the State of Illinois, and Hugh Graham, of the city of Bloomington, in the State of Illinois, and citizens of the State of Illinois, complainants, bring this their bill of complaint against the Wayne Agricultural Company, a corporation existing under and by virtue of the laws of the State of Indiana; Levi L. Lawrence, William Baxter, Thadeus Wright, and David Sutton, of the city of Richmond, in the State of Indiana, and citizens of the State of Indiana, defendants; and thereupon your orators complain and say—

1. That prior to the 11th day of February, A. D. 1868, the said Alvaro B. Graham was the original and first inventor and discoverer of a new and useful improvement in harvesters, not known or used by others before his invention thereof and which had not, at the time of his application for a patent therefor, been in public use or on sale for more than two years with his consent and allowance, as your orators verily believe; and that, upon due application, letters patent of the United States No. 74342, in due form, were issued to

the said Alvaro B. Graham on the said 11th day of February, 1868, granting to him, his heirs, administrators, or assigns, for the term of seventeen years, the full and exclusive right of making, using, and vending to others to be used the said invention, as by reference to said letters patent or a certificate copy thereof, here in court to be produced, will more fully appear.

2. That by virtue of the premises and a written assignment, given for a good and valuable consideration, dated August 12th, 1870, and recorded in the United States Patent Office September 12th, 1870, in Liber H[13], page 392, of transfers of patents, the said Hugh Graham became the owner of the legal title to said patent, but that by virtue of a written agreement then executed between your orators, but which has never been recorded, the said Alvaro B. Gra-
635 ham continued to have an equitable interest therein and in the proceeds thereof, and that your orators ever since have been and now are the sole and exclusive owners of said letters patent, and are by law entitled to sue for and receive all damages, savings, and profits arising out of or occasioned by infringement thereof.

3. That the said letters patent are in all respects good and valid in law, so far as regards the first and second claims thereof.

That on or about the 11th day of December, 1874, your orator, Hugh Graham, filed his bill of complaint against Elijah H. Gammon and William Deering in the circuit court of the United States for the northern district of Illinois, setting forth the said letters patent and the infringement of the first and second claims thereof by the said defendants and praying an account and injunction against them; that said defendants afterwards filed their answer to said bill denying, among other things, the validity of said patent as to said two claims and setting up a large number of prior patents as anticipating said invention; that, issues being joined and proofs taken at length and for a long time, said cause was brought to a hearing on the merits on the 14th day of May, 1877, before his honor, Judge Henry W. Blodgett, and was argued before him by the counsel for your orators and said defendants, respectively, and was afterwards held under advisement by said judge until the 10th day of July, 1877, when judgment was duly pronounced; that said court then decided that said letters patent were good and valid in law as to said two claims, and that mowing machines sold by the defendants were infringements thereof, and by decree, afterwards entered of record, perpetually enjoined the said defendants from making, using, or selling the said invention; that after said decision, the defendants acquiescing therein and in the validity of said patent, settled with your orators for their past infringement, paying a large
636 amount of money therefor, and that thereupon, to wit, on or about May 8, 1878, a final decree was entered against them in said cause, from which no appeal was ever taken, as by reference to the proceedings in said suit and the opinion of said court, published in the 7th volume of Bissell's Reports, commencing at page 490, will more fully appear.

That on or about the 8th day of June, 1877, your orator, Hugh

Graham, filed his bill of complaint against Cyrus H. McCormick, Leander J. McCormick, and Robert H. McCormick in the circuit court of the United States for the northern district of Illinois, setting forth said letters patent and the infringement of the first and second claims thereof by the said defendants and praying an account and injunction against them; that said defendants afterwards filed their answer and two amended answers to said bill, denying, among other things, the validity of said patent as to said two claims and setting up twenty-four prior patents as anticipating said invention, and various other grounds of defense; that, issue being joined and proofs taken at length and for a long time, said cause was brought to a hearing on the merits on the 14th, 15th, and 16th days of January, 1880, before their honors, Judges Thomas Drummond and Charles E. Dyer, sitting together, and was argued before them by the counsel for your orators and the said defendants, respectively, and was afterwards held under advisement by said judges until the 13th day of March, 1880, when judgment was duly pronounced, and that said court then decided, in a long and full opinion written by his honor, Judge Drummond, that said letters petent were good and valid in law as to two said claims, and that machines manufactured and sold by the defendants were infringements thereof, as by reference to the proceedings in said suit and the opinion of said court will more fully appear.

That on or about the 6th day of December, 1878, your
637 orator, Hugh Graham, filed his bill of complaint against the Geneva Lake Crawford Manufacturing Company in the circuit court of the United States for the eastern district of Wisconsin, setting forth the said letters patent and the infringement of the first and second claims thereof by the said defendant and praying an account and injunction against it; that said defendant afterwards filed its answer to said bill, denying, among other things, the validity of said patent as to said two claims and setting up a large number of prior patents as anticipating said invention; that, issues being joined and proofs taken at length and for a long time, said cause was brought to a hearing on the merits on the 27th and 28th days of October, 1879, before his honor, Judge Charles E. Dyer, and was argued before him by the counsel for your orators and, said defendant, respectively, and was afterwards held under advisement by said judge until the 11th day of October, 1880, when judgment was duly pronounced; that said court then decided, in a long and full opinion, that said letters patent were good and valid in law as to said two claims, and that machines manufactured and sold by the defendant (known as the Crawford mower and described in patent No. 133,014, issued to Hiram M. Burdick and Tennis V. Le Roy November 12th, 1872) were infringements thereof, and by decree, afterwards entered of record, perpetually enjoined the said defendant from making, using, or selling the said invention, and that afterwards, to wit, on or about May 10th, 1881, a final decree was entered in said cause against the said defendant, from which no appeal has ever been taken, as by reference to the proceedings in said suit and the opinion of said court will more fully appear.

That on or about the 12th day of December, 1880, your orators filed their bill of complaint against the Remington Agricultural Company, Eliphalet Remington, Philo Remington, and Samuel Remington, in the circuit court of the United States for
638 the northern district of New York, setting forth the said letters patent and the infringement of the first and second claims thereof by the said defendants, by their manufacture and sale of the said "Crawford mowers," as described in said Burdick and Le Roy patent No. 133,013, and praying an account and injunction against them; that afterwards, and after their answer had been filed in said cause and some proofs taken therein, the defendants, acquiescing in the validity of your orators' said patent and acknowledging their infringement of the first and second claims thereof as aforesaid, settled with your orators under said patent, paying them a large amount of money for the past and taking a license for the future use of said invention, and that thereupon said cause was duly dismissed out of court by stipulation.

4. That since the granting of said patent, and at divers times and occasions between that time and the filing of this your orators' bill, the said The Wayne Agricultural Company, Levi L. Lawrence, William Baxter, Thadeus Wright, and David Sutton, the defendants herein, well knowing the premises, and in infringement of said letters patent No. 74342, and in violation of the exclusive rights of your orators thereunder, and since the same accrued to your orators, and prior to the commencement of this suit, and without the license of your orators, at Richmond, Indiana, to wit, at the district aforesaid, and at various other places in the United States, have manufactured and sold, and still continue to manufacture and sell, mowing machines containing and embodying and having on them as a part thereof the improvements and inventions described in said letters patent No. 74342, and particularly mentioned and claimed in the first and second claims thereof—that is to say, the said defendants have manufactured and sold, and still continue to manufacture and sell, the said "Crawford mower," as described in said
639 Burdick and Le Roy patent No. 133,013, and which was held to be an infringement of the first and second claims of said patent No. 74342 in the said suit against The Geneva Lake Crawford Manufacturing Company, and was admitted to be such infringement in the said suit against the Remington Agricultural Company and others, as above mentioned.

5. That your orators have notified the said defendants of their said infringement and requested them to desist therefrom, but they have continued the same, and by reason of said infringement great injury has resulted to your orators and great gains and profits have accrued to said defendants, the full amount of which is unknown to your orators, but which in equity belong to them, and should be accounted for by said defendants and paid over to your orators as the avails of their exclusive rights aforesaid and profits and gains which they would have derived therefrom but for the unlawful acts of said defendants.

6. That on or about the 21st day of November, 1878, your orators

granted to the said defendant, The Wayne Agricultural Company, a license to make and sell mowing machines containing the inventions and improvements described and claimed in said letters patent No. 74342, upon certain terms and conditions, a copy of which license is hereto attached and made a part of this bill, marked Exhibit "A," and that simultaneously with the execution of said license, and as a part of the same transaction, a certain agreement in writing was entered into between your orators and the said The Wayne Agricultural Company, a copy of which is hereto attached and made a part of this bill, marked Exhibit "B;" that said license was granted at the earnest solicitation of the said defendant, and that the only inducements thereto and the only consideration received therefor by your orators were the repeated promises and representations of the said defendant that it would proceed promptly and vigor-
640 ously with the manufacture of said mowing machines; that it was then understood that the mower intended to be manufactured by said defendant would be of substantially the same character and construction as the one known in the trade as the "Sprague mower," and that if said mower proved satisfactory the said defendant would manufacture it exclusively as a mower after the season of 1879, and would do all in its power to build up a large trade therein and to supply the trade therewith, but that it would cancel said license if it should find that said mower would not answer its purposes.

That, notwithstanding its said promises and agreements, the said defendant did not proceed with the manufacture of the said "Sprague mower," and has never made any efforts to build up a trade therein, but, on the contrary, it has wholly declined and refused so to do; that it did not manufacture said machine or any other machine under said license for the seasons of 1879 or 1880, and that it has never accounted to your orators or paid them any royalties whatever under said license.

That instead of proceeding to manufacture and put said "Sprague mower" upon the market, as originally intended and agreed, the said defendant, desiring and intending to evade your orators' said patent and its own obligations and agreements above mentioned, afterwards adopted and put upon the market, but under a different name, the said "Crawford mower," as described in the said Burdick and Le Roy patent, and as afterwards held and admitted, as above set forth, to be an infringement of your orators' patent; that at the time and after its adoption of said mower the said defendant claimed and insisted that it did not contain any of the inventions or improvements mentioned and claimed in your orators' said patent, and consequently that your orators were not entitled to receive any royalties therefor under said license; that in view of the said defend-
ant's failure to manufacture and put said mowers upon the
641 market, as originally intended and agreed, and of its failure and refusal to account with your orators or to pay them any royalties under said license, and of its adoption and sale of another machine which it claimed and insisted did not contain any of your orators' inventions, and of its own admission that said license was no

longer in force, your orators, to wit, on or about the 7th day of December, A. D. 1880, served a notice on the said defendant revoking said license and declaring the same to be forever canceled and annulled, a copy of which notice is hereto attached and made a part of this bill, marked Exhibit "C."

That since the said "Crawford mower" has been held to contain the invention and improvements mentioned and secured in the first and second claims of your orators' said patent, as above set forth, the said defendants have been claiming and insisting, and now claim and insist, that said license is in full force and effect, and that said company has a right to continue the manufacture and sale of said mower thereunder, and consequently that your orators have no right or power to grant licenses to other parties under said patent within the territory named in said license, and that in furtherance of said unfounded claim and in order to hinder and embarrass your orators' operations under said patent, to wit, on or about the 16th day of December, 1880, they wrongfully caused said license to be recorded in the United States Patent Office, and the same now appears of record in Liber A[26], at page 85, as your orators are informed and believe.

That the inventions and improvements mentioned and secured in said two claims are very important and valuable, and have come into general and extensive use in various parts of the country; that your orators have granted a number of licenses thereunder, from which they are realizing and expect to realize large profits, and that they desire to grant licenses to other parties in the ter-
642 ritory named in said revoked license, but that the said unfounded claim and actions of the said defendants are intended and calculated to prevent their doing so, and otherwise to greatly hinder and embarrass their business and operations under said patent.

7. That the matter now in dispute between your orators and the said defendants, arising out of the matters aforesaid, exceeds in value the sum of five hundred dollars, exclusive of costs.

8. Wherefore your orators pray that the said defendants, The Wayne Agricultural Company, Levi L. Lawrence, William Baxter, Thadeus Wright, and David Sutton, may answer the premises, but not under oath, an answer under oath being hereby expressly waived; that the said defendants, their agents, attorneys, servants, and workmen, and each and every of them, may be restrained and enjoined, as well preliminarily and provisionally as perpetually, from making, using, or selling the inventions and improvements mentioned and claimed in the first and second claims of said patent No. 74342, and from asserting or claiming that said license from your orators to the defendant, The Wayne Agricultural Company, granted November 21, 1878, as above mentioned, is in force or effect, or asserting or claiming any rights or interests thereunder; that the said defendants may be decreed liable to your orators as for an infringement of the first and second claims of said patent No. 74342, and may be required to render to your orators a just and true account of the number of machines they have made or sold embody-

ing or having on them, as a part thereof, the inventions and improvements mentioned and claimed in said two claims; that they may be decreed to pay over to your orators any and all gains, savings, profits, and advantages, to be duly determined, made, derived, or received by them from their unlawful manufacture, use, or
643 sale of said patented inventions, and also all damages resulting to your orators therefrom, together with such increase over the actual damages suffered as is warranted by law and as to your honors shall seem just and proper; and that your orators may have such other and further relief in the premises as may be agreeable to equity and good conscience and as to your honors shall seem meet.

May it please your honors to grant unto your orators the writ of subpœna, issued out of and — the seal of this honorable court, directed to the said defendants, The Wayne Agricultural Company, Levi L. Lawrence, William Baxter, Thadeus Wright, and David Sutton, commanding them, by a certain day and under a certain penalty, to be and appear in this honorable court, and then and there to answer the premises, and to stand to and abide by such order and decree as may be made against them; and also the writ of injunction, as well preliminary and provisional as perpetual, issuing out of and under the seal of this honorable court, enjoining and restraining the said defendants, The Wayne Agricultural Company, Levi L. Lawrence, William Baxter, Thadeus Wright, and David Sutton, their servants, agents, attorneys, and workmen, and each and every of them, as hereinbefore in that behalf prayed.

And your orators will ever pray, etc.

ALVARO B. GRAHAM.
HUGH GRAHAM.

BANNING & BANNING,
Solicitors for Complainants.
EPHRAIM BANNING,
Of Counsel.

UNITED STATES OF AMERICA.

STATE OF ILLINOIS, COOK COUNTY, } ss:
Northern District of Illinois, }

Alvaro B. Graham, being duly sworn, upon oath says that he is the patentee of letters patent of the United States No. 74342,
644 and one of the complainants named in the foregoing bill subscribed by him; that he has read said bill and knows the contents thereof, and that the same is true of his own knowledge, except as to the matters therein stated on information and belief, and as those he believes it to be true; that he verily believes himself to have been the original and first inventor of the improvement in harvesters described and claimed in said letters patent No. 74342, and particularly of the improvements mentioned in the first and second claims thereof; that he also verily believes that said letters patent are in all respects good and valid in law, and that the said

complainants are the exclusive owners thereof, as alleged in said bill.

ALVARO B. GRAHAM.

Subscribed and sworn to before me this 28th day of June, 1881.
[SEAL.] CHARLES C. LINTHICUM,
Notary Public.

EXHIBIT "A."

Memorandum of agreement made and entered into between Alvaro B. Graham, of Girard, Kansas, general licensee, and Hugh Graham, of Bloomington, Illinois, owner of the patent granted to Alvaro B. Graham, No. 74342, patented February 11, 1868, of the first part, and the Wayne Agricultural Co. of Richmond, Indiana, of the second part.

Whereas the party of the first part hereby agree to license the party of the second part to manufacture their mowing machine embraced in patent No. 74342, issued in favor of Alvaro B. Graham February 11, 1868, and to sell and have the same sold in the territory of Ohio, Indiana, Illinois, Missouri, Iowa, Kansas, Arkansas, Texas, Kentucky, and Tennessee, and in addition to such right in said States to have also the right to sell in any other territory until otherwise disposed of by the party of the first part, this license to continue during the lifetime of the patent and all extensions thereof. The party of the first part hereby agree to give the party of the second part full and exclusive right and control of the manufacturing and sale of said machine in the territory above specifically stated; also to defend them at their own expense from all piracy and infringement in said territory, and to make their claim good to such patent from all who may contest and litigate their rights thereto.

645

In consideration of the above license and privilege the party of the second part hereby agree to pay to the party of the first part a royalty of three dollars each on all the machines which they make and sell, said royalty to be settled for on the twentieth day of January of each year following the sale of said machines.

This license is also understood to include the patent spring coupling spring for pitman covered by the patent No. 76436, issued to said Alvaro B. Graham April 7th, 1868, said spring to be used exclusively on the mowing machine above licensed.

As witness the hands of the parties hereto the 21st November, 1878.

HUGH GRAHAM,
By A. B. GRAHAM, *Att'y-in-Fact.*
ALVARO B. GRAHAM.
WAYNE AG'L COMPANY,
Pr. L. L. LAWRENCE, *Pr.*

Witness:
THADDEUS WRIGHT.

EXHIBIT "B."

Whereas Alvaro B. Graham and Hugh Graham, by an instrument in writing, bearing even date herewith, have licensed the Wayne Agricultural Co. of Richmond, Indiana, to manufacture and sell a mowing machine patented by said Alvaro B. Graham February 11th, 1868, and numbered 74342:

646 Now, therefore, the said Alvaro B. Graham and Hugh Graham do hereby agree to pay to the said Wayne Agricultural Company one-half of whatever cost they may be at in getting up the models and patterns with which to make said machine, said one-half cost to be deducted out of the royalty coming to said Grahams; and, further, should the Wayne Agricultural Co. at any time deem it expedient to discontinue the manufacture of said mower, then said Grahams shall allow and pay over to said Wayne Agricultural Co. the remaining one-half cost of preparing and getting up said models and patterns for said machine. The Wayne Agricultural Co. hereby agree that if they find this mowing machine to be equal to their expectations in suiting their trade that they will after the season of 1879 manufacture it exclusively as a mower, and that they will do all in their power to supply the wants of the trade therewith; but if they shall find that it will not answer their purpose as aforesaid, then they hereby obligate themselves to cancel the license above referred to.

As witness the hands of the parties hereto this 21st November, 1878.

HUGH GRAHAM,
By A. B. GRAHAM,
Att'y-in-Fact.
ALVARO B. GRAHAM.
WAYNE AG'L CO.,
Pr. L. L. LAWRENCE, *Pr.*

Witness:
THADDEUS WRIGHT.

EXHIBIT "C."

To the Wayne Agricultural Company, Richmond, Indiana:

In consequence of your failure to manufacture machines or pay royalties as required by the contract or license of November 21st, 1878, under patent No. 74342, issued to Alvaro B. Graham February 11, 1868, for an improvement in harvesters, heretofore

647 existing between your company and ourselves, we hereby revoke said contract or license and declare the same to be forever canceled and annulled.

Richmond, Indiana, December 6th, 1880.

HUGH GRAHAM,
By ALVARO B. GRAHAM,
Att'y-in-Fact.
ALVARO B. GRAHAM.

E. W. ECKHARD.

The joint and several answers of Wayne Agricultural Company, Levi L. Lawrence, William Baxter, Thaddeus Wright, and David Sutton, defendants, to the bill of complaint of Alvaro B. Graham and Hugh Graham, complainants.

These defendants, now and at all times hereafter saving and reserving to themselves and each of them all benefit and advantage of exception which can or may be had or taken to the many errors, uncertainties, and other imperfections in the said complainants' said bill of complaint contained, for answer thereunto or unto so much and such parts thereof as these defendants are advised is or are material or necessary for them or any of them to make answer unto, these defendants, jointly and severally answering, say:

1. They admit the issue and assignment of the complainants' letters patent, as stated in the said bill of complaint.

2. They have no knowledge of the several alleged suits mentioned in the said bill of complaint nor of the proceedings therein, save as in said bill set forth, and therefore call for due proof of all and every of the matters and things so alleged and set forth.

3. They admit that on the 21st day of November, A. D. 1878, the complainants granted to the defendant, The Wayne
648 Agricultural Company, a written license to make and sell mowing machines containing the inventions and improvements described and claimed in the letters patent No. 74342, mentioned in said bill of complaint, upon the terms and conditions mentioned in said license, and, as a part of the same transaction, a certain agreement in writing was entered into between the complainants and the Wayne Agricultural Company, bearing the same date, and that the papers marked Exhibit A and Exhibit B, filed with the complainants' bill, are substantially true copies of said respective papers, except that in the original contract, of which Exhibit B purports to be a true copy, the one-half of the cost of getting up the models and patterns was to be deducted from the first royalty coming to the complainants and not simply from the royalty, as set forth erroneously in said copy; but these defendants, answering, say that the said two papers constituting the written evidence of said transaction contained the entire agreement between the said parties, and that there was no other bargain or agreement and no other terms or conditions relating thereto except as set forth in said two writings, and they deny each and every allegation in the complainants' bill of complaint contained stating or charging any other or additional agreements, terms, or conditions except as set forth in said two writings.

They deny any agreement on the part of the defendants or any of them to make and sell the "Sprague mower," so-called in the said bill of complaint, although they remember that the complainants, during or after the pendency of the said negotiations, referred to the said Sprague mower as a good illustration of their said patented invention, and recommended them to procure the patterns from which the castings of the Sprague mower were made, or duplicates thereof, in order to save the expense and delay that would otherwise

649 be necessary to prepare and fit patterns for the defendants' work. The defendants further deny that said license was granted at the earnest solicitation of any of the defendants, as alleged in said bill of complaint, and aver, on the contrary, that the defendants were at first reluctant to give up making and selling the Richmond mower, which they had been making and selling up to that time, and were only influenced thereto by the earnest and persistent solicitations of the complainants.

4. These defendants, further answering, deny all and every allegation in said bill of complaint contained to the effect that they or any of them have or has ever desired or intended at any time to evade the complainants' said patent or their own obligations and agreements above mentioned or any part or parts thereof, or that these defendants or any of them ever claimed or insisted that any mowers made or sold by these defendants after the season of 1879 did not contain any of the inventions or improvements mentioned and claimed in said patent, or that by reason thereof the complainants were not entitled to royalties therefor in accordance with the said written agreements, or that the defendants ever refused to account with the complainants for all the royalties which became due under the said agreements, or ever refused to pay over said royalties to the extent that they had become due and payable, or that the defendants or any of them ever denied that said license was in force or admitted that it was no longer in force, as in said bill of complaint alleged.

5. These defendants, further answering, say that at or about the time of accepting said license and making said written agreements the complainants and defendants discussed together the great expense which would be necessarily incurred and the long delay that would necessarily ensue if the defendants should be obliged to get up a new set of patterns for the proposed mowing machine and experimentally to ascertain the proper working proportions
650 thereof, without any other guide than the said letters patent, which was not full and perfect in its statement of the relative sizes and proportions of the parts to be practically employed in the machine; that the complainants fully recognize the difficulties referred to and were desirous to avoid the said expense and delay; that in that connection the complainants told the defendants that they could not furnish the defendants with a machine or with patterns, but that by visiting the shops of the Sprague Manufacturing Company, at Providence, Rhode Island, and examining or procuring from last mentioned company a set of their working patterns by them used in the manufacture of the Sprague mower or a complete Sprague mowing machine such inconvenience, expense, and delay could probably be avoided.

That thereupon defendants used due and reasonable diligence, and were at great trouble and expense in endeavoring to procure from said Sprague Manufacturing Company the necessary information referred to, but were unable to procure the same from said company; that, by reason of delay so necessarily resulting from the fruitless efforts to procure the information aforesaid, it became too late

to make machines for the season of 1880; that finally the defendants learned that the Remington Agricultural Works of Ilion, New York, were making and selling mowing machines containing the inventions and improvements described and claimed in the complainants' said letters patent, and in that respect substantially the same as the said Sprague mowing machines; that thereupon, with due and reasonable diligence, the defendants sought the desired information aforesaid from said Remington Agricultural Works, and at last obtained the same, although too late to enable them to manufacture largely for the season of 1881, and that the defendants, having thus procured the information, plans, proportions, and dimensions aforesaid, im-
651 mediately began and with due and reasonable diligence have ever since continued to make and complete all necessary preparations for the extension, manufacture, and sale of mowing machines under and in accordance with the complainants' said letters patent, and with the license and agreement aforesaid; that to that end the defendants spent much money, time, and labor in providing themselves with shop room, machinery, tools, patterns, molds, and other appliances and means for said proposed manufacture, and are now, at great expense and cost, fully prepared to manufacture and sell said mowing machines extensively for the next ensuing trade season, and to make such manufacture and sale profitable and advantageous for the complainants and defendants; that in all things pertaining to their said contract obligations the defendants have at all times exercised and still continue to exercise due and reasonable diligence in fully and fairly complying in all respects with the terms and conditions of the said license and agreement, and ever since the season of 1879 have done all in their power to supply the wants of the trade with the complainants' said inventions, and that great and irreparable damage, loss, and injury will ensue to the defendants if they shall now be restrained, hindered, or interfered with in the further business of manufacturing and selling said mowing machines in accordance with the license and agreement aforesaid.

6. These defendants, further answering, say that for a long time prior to and at the time of making said license and agreement these defendants were making and selling mowing machines of the kind known as Richmond machines, and were deriving a profit therefrom, but that, in order to fully and fairly carry out the terms and conditions of said license and agreement, the defendants, at the close of the season of 1879, ceased to manufacture or sell said Rich-
652 mond mower, and ever since that time have manufactured and sold the complainants' mowing machines exclusively as a mower, as in said contract and license agreed, and that up to the present time they have not found said mowing machine not to answer their purpose nor deemed it expedient to discontinue the manufacture thereof.

7. These defendants, further answering, admit that the complainants served upon them a notice purporting to revoke, cancel, and annul said license, but these defendants then denied and still deny the right or power of the complainants, in view of all the facts and circumstances aforesaid, to revoke, cancel, or annul said license, and

deny that any lawful cause for revoking, canceling, or annulling said license has ever been given or occasioned by the defendants or any of them; and deny every allegation of such cause stated in the complainants' bill of complaint; and deny that said notice had any legal effect whatever in that behalf, but charge that the said license and agreement are still in full force and effect and binding upon the complainants as well as upon the defendants.

8. These defendants, further answering, admitting the validity and value of the said letters patent, deny each and every allegation, statement, and charge of the complainants' bill of complaint, except those hereinbefore specifically admitted to be true, and except those hereinabove stated to be without the information or knowledge of these defendants, and as to all the latter they call for due proof of each and every — as the complainants shall be advised.

9. And these defendants, further answering, deny that the complainants on their part have complied with or performed the conditions or provisions of said license and agreement obligatory upon them to perform, but charge that they, the said complainants, have willfully violated their agreement in the said license and contract contained, to wit, in this, that the complainants, since the 21st day of November, A. D. 1878, and without the defendants' con-
653 sent, have licensed and procured others to manufacture and sell said mowing machines in the territory exclusively secured to these defendants by virtue of the said agreement and license set forth in the complainants' bill of complaint; and in this, that the complainants have utterly failed and refused to defend these defendants at their own expense from all piracy and infringement in the territory mentioned in said license and in other material and important particulars to which they bound themselves by their said license and agreement; that the said obligations of the complainants and of the defendants to pay royalty were dependent conditions in said license, and that by reason of the failure and refusal of the complainants to perform their said obligations these defendants have suffered great loss, damage, and injury, which they are entitled in this suit to have ascertained and to recoup against the complainants' royalties, due or to become due, under the said license and agreement, so far as said royalties will go, and for the residue to have their action at law.

And, having now fully answered the said bill of complaint, the defendants pray to be hence dismissed with their reasonable costs and charges in this behalf most wrongfully sustained.

WAYNE AGRICULTURAL CO.,
[SEAL.] By L. L. LAWRENCE, *President.*
LEVI L. LAWRENCE.
WILLIAM BAXTER.
THADEUS WRIGHT.
DAVID SUTTON.

HILL & DIXON,
Solicitors and Counsel for Defendants.

UNITED STATES OF AMERICA, *District of Indiana,* } ss:

Levi L. Lawrence, William Baxter, Thadeus Wright, and
654 David Sutton, being severally duly sworn and affirmed, depose and say that they are the defendants named in the foregoing answer subscribed by them, and that the said Levi L. Lawrence is the president of the defendant corporation, The Wayne Agricultural Company, and that the same is true of their own knowledge, except as to the matters therein stated on information and belief, and as to those matters they believe it to be true.

LEVI L. LAWRENCE.
WILLIAM BAXTER.
THADEUS WRIGHT.
DAVID SUTTON.

Subscribed and sworn to before me this 25th day of August, 1881, by L. L. Lawrence, president, and affirmed to by William Baxter, David Sutton, and Thadeus Wright, the other officers.

Witness my hand and seal.

[SEAL.] HERMON B. PAYNE,
Notary Public.

I, Noble C. Butler, clerk of the circuit court of the United States for the district of Indiana, do hereby certify that the above and foregoing is a full, true, and complete copy of the bill of complaint filed June 29, 1881, and of the defendants' answer, filed September 5, 1881, in the cause entitled Graham *et al. v.* The Wayne Agricultural Co. *et al.*, as fully as the same appears of record in my office.

Witness my hand and seal of said court this 21st day of October, A. D. 1882.

[SEAL.] NOBLE C. BUTLER, *Clerk.*

I, Walter Q. Gresham, judge of the district court of the United States for said district, do certify that at the date of the foregoing certificate Noble C. Butler was and now is the clerk of the circuit court of the United States for said district, and that his attestation aforesaid is in due form of law.

Witness my hand this 21st day of October, 1882.

WALTER Q. GRESHAM, *Judge.*

655 COMPLAINANT'S EXHIBIT SAXTON LICENSE.

Whereas James A. Saxton, of Canton, Ohio, is the exclusive licensee and owner of the right to make and use, and vend to others to be used, certain inventions in reaping and mowing machines set forth and described in the patents referred to in a certain assignment, license, and agreement made by Saxton to Cornelius Aultman, dated December 25, 1872, and also in a certain other assignment, license, and agreement made by Cyrenus Wheeler to said Aultman, and in any other patents owned by said Aultman on the 27th day

of June, 1873, excepting his patents on self rakes; and whereas an agreement and understanding has been come to between said James A. Saxton, party of the first part, and Cyrus H. McCormick and Leander J. McCormick, partners under the name and style of C. H. & L. J. McCormick, party of the second part to this memorandum of agreement, it is now covenanted and agreed between said parties as follows, to wit:

The said party of the first part hereby assigns and conveys to said party of the second part the full right and privilege to manufacture and sell to others to be used what is called the Ball or Ohio reaping and mowing machine or mowing machine, it being understood that said Ball machine contains in its construction the devices covered by the patents above referred to, said machine hereby intended being the same machine as improved and constructed by said party of the second part and now remaining in their reaper and mower factory in Chicago, and marked "McCormick's Improved Ohio Machine," or a machine substantially so constructed, a model of which is to be furnished to said party of the first part by the said party of the second part within a reasonable time. The above right and privilege, it is understood, is for the year and harvest of 1874, and from and after that period is agreed to be exclusive in said party of the second
656 part, and is limited in extent to and embraces the territory covered by the States of Wisconsin, Illinois, Kentucky, Tennessee, East Virginia, and all other States and Territories south and west of the same, and also the right to sell the machines in the State of Indiana in common with other parties heretofore licensed by the said party of the first part; and it is understood that this agreement extends to and includes the right to make and sell the said Ball machine as aforesaid, either as a mower or a combined reaping and mowing machine, with the addition to it of the usual McCormick reel and rake, attached substantially as it has usually been in said Ball machine.

And the said party of the first part hereby covenants that he will protect and defend said party of the second part in the use of the several devices and inventions used in the construction of the said Ball machine as found and covered by the patents above referred to or any of them, and to indemnify said parties of the second part against any claims of any other parties to a right therein under those patents.

It is further understood and agreed that this agreement is to continue during and for the year and harvest of 1874, and the said party of the second part is to have the option at any time between this date and the fifteenth day of October next to elect to continue the license and agreement for and until and including the year and harvest of 1878, notice of said option, if made, to be mailed at Chicago to said Saxton at Canton, Ohio, and after that time the party of the second part are to have the right to use all the patents above referred to covering said machine then expired or then yet to expire and during any extension thereof.

And it is further understood and agreed that said party of the second part shall, during the continuance of this license under this

agreement, manufacture and sell said Ball machine instead
657 of the machine they have been up to the present time selling and as many as they shall feel justified in making in each of the said future years after 1874.

And it is further understood and agreed that the said party of the second part shall render an account of the number of machines manufactured under this agreement to the party of the first part by mail, addressed to him at Canton, Ohio, on the first day of December in each year, and pay to said party of the first part, on the first day of January ensuing in each year, the sum of two dollars and fifty cents ($2.50) upon each and every of such machines, at the city of Chicago, on application of the party of the first part or his authorized agent.

It is understood that this agreement extends to and shall bind the heirs, assigns, and personal representatives of the parties thereto, and the same as a license shall be assignable.

In witness whereof the said parties have hereto set their hands in duplicate this nineteenth day of February, in the year one thousand and seventy-four.

JAMES A. SAXTON.
C. H. & L. J. McCORMICK.

Signed, etc., in presence of—
S. A. GOODWIN.

The words "and Territories" interlined after signing, by direction of both parties, by me.

S. A. GOODWIN.

658 COMPLAINANT'S EXHIBIT FILES OF McCORMICK'S PATENT.

To the Commissioner of Patents:

Your petitioners pray that letters patent may be granted to C. H. and L. J. McCormick, of Chicago, Illinois, as their assignees for the invention set forth in the annexed specification.

Also that you will recognize William D. Baldwin, of Washington city, D. C., as their duly authorized attorney, with full power of substitution and revocation, to prosecute this application, to make alterations and amendments therein, to receive the patent, and to transact all business in the Patent Office connected therewith.

LEANDER J. McCORMICK.
WM. R. BAKER.
LAMBERT ERPELDING.

We concur in the above.

C. H. McCORMICK,
LEANDER J. McCORMICK,
Assignees.

To all whom it may concern:

Be it known that we, Leander J. McCormick, William R. Baker, and Lambert Erpelding, all of Chicago, in the county of Cook and

State of Illinois, have invented certain new and useful improvements in harvesters, of which the following is a specification:

The subject-matter claimed will hereinafter specifically be designated.

In the accompanying drawings our improvements are shown as embodied in a two-wheel, hinged-bar mowing machine.

Figure 1 is a view from the grain side of the machine, the cutting apparatus and a portion of one wheel being broken away to more clearly show the parts claimed.

Figure 2 a plan or top view, the driver's seat being removed.

659 Figure 3, a bottom view, the cutting apparatus being removed.

Figure 4, a longitudinal sectional view of the support for the driver's seat, crank shaft, protecting plates, etc.; and

Figure 5, a view in cross-section of the crank shaft and protecting plate, on the line *y y* of Fig. 4.

The main frame A is supported by driving wheels B B, mounted and turning on an axle, C, held in suitable bearings on the frame. A tongue, D, projects from the top side and front of the main frame. A seat, E, for the driver, is mounted on a box casting, E′, which forms a cover for the main bevel-gear wheel, and is adjustable backwards and forwards thereon by means of guide ledges and a slot and set screw.

It will be observed that the seat is mounted in advance of the main axle, the object of which is to enable the driver to see well in advance of the cutters and to counterbalance the weight of the parts on the rear of the machine.

The finger-beam E is secured to the shoe G in the usual way. A drag bar, H, lies parallel with the drive wheels, and has its front end curved upwards to form a hook, *h*, which passes through a slot in a down-hanger, I, located on the inner front cover of the main frame, in which it is pin-jointed, the extreme end of the hook entering a guide slot or recess, *i*, on the upper portion of the down-hanger, the object of which, while the drag bar is free to move up and down around its pivot, is to prevent it from turning over sidewise.

The rear end of the drag bar is bent inwards and downwards (Figs. 1 and 2), a sufficient space being preserved beneath it to allow the shoe and its points to play freely, and terminates in a laterally projecting pin, *h′*, which enters a socket in a swiveling eye bolt, *a*, on the rear end of the shoe, and forms the pivot on which the shoe, and consequently the finger-beam, rocks.

660 The shoe G is also provided in front and rear with lugs, *g g′*, to which are, respectively, pin-jointed the front and rear members of a forked coupling arm, J, the swiveling eye bolt *a* forming the pivot of the rear member. The end of this coupling arm is bent or curved like a "goose-neck" to pass over the crank shaft, and terminates in a ball, *j*, working in a socket, *j′*, in the crank-box casting, the socket being covered by a cap, j^2, thus forming a ball-and-socket joint, which allows the finger bar to rise and fall and to rock freely without cramping.

The pressure of the cutting apparatus upon the ground is regu-

lated by means of a link, K, hooked at one end to the rear fork or member of the coupling arm and passing through an overhanging bracket, L, mounted on the inner rear corner of the main frame, the link above the bracket being surrounded by a spring, the tension of which may be regulated by a screw nut working on the link.

The cutting apparatus is raised and lowered by a chain, *l*, hooked to the front fork of the coupling arm, passing over a pulley journaled in the overhanging bracket L, and connected by an arched link, *l'*, with a slotted lifting lever, M, pivoted on the main frame within convenient reach of the driver. It is obvious the range of lift of the cutting apparatus by this lever can be varied by attaching the link *l'* to the lever nearer to or farther from its fulcrum, and that, owing to its construction and manner of connection with the link, the link acts as a stop to limit the backward motion of the lever by abutting against the top of the slot in which it is pivoted.

The cutting apparatus may be rocked on its swiveling pivot joint, and held in any desired position to adapt it to rough as well as smooth land, by means of a rocking lever, N, pivoted to the drag bar and extending to within convenient reach of the driver, the lever being provided with a spring detent, N', taking into a
661 curved rack, O, also mounted upon the drag bar, a lifting link, O', hooked to the front member of the forked coupling arm, passing loosely through an opening in the extended portion of a bracket, *o*, mounted on a rocking lever through which the detent works, to engage the curved rack, the lifting link above this bracket being provided with an adjustable screw nut, *o'*, whereby it will be seen that when the cutting apparatus is adjusted the screw nut will prevent its descent beyond its adjusted point until the detent is withdrawn from the rack, while allowing it to rise to pass over obstructions.

Instead of this lifting link O' a chain might be used, and by the employment of a rigid strap the cutting apparatus, when adjusted by means of the rack, would be held in a fixed position.

We have found that the weight of the cutting apparatus on the inner rear corner of the main frame has the effect of springing and twisting the frame, by which the boxes are tightened and the machine made heavy to move. This tendency is overcome by a diagonal brace, P, extending the entire length of the frame, its front end being bolted to the under side of the frame, preferably by the same bolt that passes through the tongue and front cross-piece, another bolt passing through the brace and center cross-piece close to the main axle, a bolt to the rear end not being essential.

On the inner surfaces of the drive wheels are cast spur wheels, which mesh with and drive corresponding pinions mounted on a counter-shaft, R, turning in bearings on the frame in front of the main axle. This counter-shaft carries a beveled gear wheel, which drives a corresponding pinion on the crank shaft S, the crank shaft being supported in suitable bearings, and driving the cutters by a crank and pitman, as usual.

Suitable plates or casings surround the crank shaft and bevel-gear wheels to protect them.

We have described our improvements as organized for
662 operation as a two-wheel, hinged-bar mowing machine, but they are also adapted for the reception of parts necessary to constitute a hand-raking or self-raking reaper.

We claim as our invention—

Allow.

1. The combination, substantially as hereinbefore set forth, of the slotted and grooved downhangers and the hooked front end of the drag bar pivoted therein and guided and braced thereby.

Erase and insert A. Nov. 13, '75.

Graham.

[2. The combination, substantially as hereinbefore set forth, of the drag bar, the shoe, and the swivel pin forming the joint between the two, whereby the drag bar sustains the strain on the shoe, while leaving it free to rock on its hinges.]*

Insert by B. Nov. 13, '75.

Graham.

Insert "D." Dec. 8, 1875.

3. The combination, substantially as hereinbefore set forth, of the shoe, the brag bar ∧ extending over and in rear of the shoe, the swivel pin connecting the two, and the forked coupling arm, the front member of which is pivoted to the front of the shoe, while its rear member is pivoted to the swivel pin of the drag bar, whereby great flexibility of movement and a firm bracing of the shoe is secured.

By B. Nov. 15, '75.

Decided there is no interference. The claims are limited.
Allow.

Continued.

[4.]* 5. The combination, substantially as hereinbefore set forth, of the shoe, the forked coupling arm, the drag bar ∧ extending over and in rear of the shoe, the swivel pin connecting the two, the rocking lever and detent mounted on the drag bar, and the adjustable link connection between the lever and the coupling arm, whereby the shoe readily may be rocked or adjusted.

Whitely.

Allow.

By B. Nov. 13, '75.

Contin'd.

[5.]* 6. The combination, substantially as hereinbefore set forth, of the shoe, the drag bar ∧ extending over and in rear of the shoe, the swivel pin connecting the two, the forked coupling arm, the overhanging bracket on the frame, and the adjustable spring tension link connecting the bracket and the rear member of the forked coupling arm, whereby the pressure of the shoe upon the ground may be regulated.

Allow.

[6.]* 7th. The combination, substantially as hereinbefore set forth, of the shoe, the drag bar, the forked coupling arm, the overhanging bracket on the frame, the adjustable spring tension link connecting the bracket and the rear membr of
663 the coupling arm, and the chain, link, and lifting lever acting on the front member of the coupling arm, whereby the shoe is first rocked and then lifted by one continuous movement of the lever.

---

* Words and sentences enclosed in brackets erased in original.

[7.]* 8th. The combination, substantially as set forth, of the coupling arm, the chain attached thereto, the link attached to the chain, and the pivoted slotted lever in which the link is pivoted, whereby the link acts as a stop to the backward movement of the lever, while allowing it to move forward freely to lift the coupling arm.

[8. 9th. The combination, with the main frame, of the diagonal brace bolted to the under side of the front cross-bar and middle bar of the frame (but loose at its rear end), whereby sagging and twisting of the inner rear corner of the frame is prevented.

Erased by E. Dec. 11, '75.

Manny, 56.

9. The slotted box, constructed as set forth, to serve both as a cover for the gearing and as a means of adjustment and support for the driver's seat.]*

Erased by C. Nov. 13, '75.

Lidren.

In testimony whereof we have hereunto subscribed our names.

LEANDER J. McCORMICK.
WM. R. BAKER.
LAMBERT ERPELDING.

Witnesses:
R. NEWTON.
D. McINTYRE.

STATE OF ILLINOIS, }
Chicago, County of Cook, } *ss:*

Leander J. McCormick, Wm. R. Baker, and L. Erpelding, the above-named petitioners, being duly sworn, depose and say that they verily believe themselves to be the original, first, and joint inventors of the improvement in harvesters described in the foregoing specification; that they do not know and do not believe that the
664 same was ever before known or used, and that they are citizens of the United States.

LEANDER J. McCORMICK.
WM. R. BAKER.
LAMBERT ERPELDING.

Sworn to and subscribed before me this 15th day of July, A. D. 1875.

[L. S.] JOHN V. A. HASBROOK,
Notary Public.

---

* Words and sentences enclosed in brackets erased in original.

No. 1. Examiner's Room No. 97.

U. S. PATENT OFFICE,
WASHINGTON, D. C., *Oct. 7th*, 1875.

McCormick, Baker, & Erpelding, care of Wm. D. Baldwin, Washington, D. C.

Improvement in harvesters. Filed July 7th, 1875.

The 1st, 6th, and 7th claims in this application, with verbal amendments in the former, may be allowed. The 2nd and 3d are met in the patent of Graham, Feb. 11, 1868, No. 74342, "hand rakers." The 4th is in conflict with a pending application, with which an interference will be declared when all other objections are removed. The 5th is not a legitimate combination; the particular construction of shoe, drag bar, and coupling arm used do not affect or modify the action of the spring tension; the alleged result is due alone to the spring support and is met in the patent of Whiteley, Sept. 12, 1871, No. 118,996, "hand-binders." The 8th is met in the patent of Manny, Oct. 21, 1856, No. 15927, "hand-rakers," and the 9th in that of Lidren, May 28, 1872, No 127,252, "self-rakers."

The 2d, 3d, 5th, 8th, and 9th claims are rejected.

WM. A. SUTPHIN, *Ass't Ex'r.*
J. B. DURNALL, *Ex'r.*

(Endorsed is: "No. 1. 128–41. Office letter. McCormick, Baker and Erpelding. October 7th, 1875. Class 56.")

665 (No. 14.) (Interference.)

DEPARTMENT OF THE INTERIOR,
U. S. PATENT OFFICE,
WASHINGTON, D. C., *November 6th*, 1875.

L. J. McCormick, W. R. Baker, and L. Erpelding, care of Wm. D. Baldwin, Washington, D. C.:

Please find below a copy of a communication from the examiner concerning your application for a patent for harvesters, dated the seventeenth day of July, 1875.

Respectfully, etc.,

R. H. DUELL,
Commissioner.

Room No. 97.

Your case above referred to is adjudged to interfere with the application of William N. Whitely, filed May ninth, 1875, for patent for harvesters—residence Springfield, O.—and the question of priority will be determined in conformity with the rules accompanying this. The preliminary statement demanded by rule 53 must be sealed up and filed on or before the twenty-seventh day of November, 1875, with the subject of invention and name of party filing it indorsed on the envelope. The subject-matter involved in the interference is—

1st. In combination with the bifurcated brace and the lateral brace or drag bar, the adjusting lever mounted with the retaining latch upon the drag bar and connected by link to said lateral brace (in your case a part of the bifurcated brace is here meant) for the purpose of raising or lowering the points of the guard fingers and cutters.

2nd. The combination of the bifurcated brace, lateral brace, adjusting lever, with its retaining latch and connecting link, and the lifting lever connected with said bifurcated brace.

It is held that there is no substantial difference in the man-
666 ner of bracing as shown in the two applications. In one instance the draw bar is a part of the bifurcated brace; in the other case the other two braces are united, the point of bifurcation being on the stubble side of the machine in the latter case and on the grain side in the former.

J. B. DURNALL, *Ex'r.*

(Endorsed is: "No. 2. 128–41. Office letter. McCormick, Baker, and Erpelding. Nov. 6, 1875. Class 56.")

Examiner's Room No. 97.

U. S. PATENT OFFICE,
WASHINGTON, D. C., *Nov.* 18, 1875.

McCormick, Baker, and Erpelding, care Wm. D. Baldwin, present.

Harvesters. Filed July 17, 1875.

An examination of the above case shows that a novel feature, as yet not claimed, exists in the device made the subject of the application. The combination, with the lateral brace attached to the front of the shoe and drag bar pivoted (or hinged) to the rear of the shoe, of a lifting lever fulcrumed upon the drag bar and linked to the lateral brace to tip the cutter bar is, so far as office records show, original with above applicants or with another pending applicant. The adoption of such a claim will inevitably lead to interference.

J. G. PARKINSON, *Ex.*

(Endorsed is: "No. 3. 128–41. Office letter. McCormick, Baker, and Erpelding. Nov. 18, 1875. Class 56.")

In the United States Patent Office.

In the Matter of the Application of MCCORMICK, ERPELDING, and BAKER for Letters Patent for Mower. Filed July 17th, 1875.

667 WASHINGTON, D. C., *Nov.* 13*th*, 1875.

To the Commissioner of Patents.

SIR: Amend the above-mentioned application as follows:

Erase the 2nd claim and insert:

"2. The combination, substantially as hereinbefore set
A. forth, of the shoe and the drag bar extending over and in rear

Allow. of the shoe and its swivel pin connecting it with the rear end of the shoe, whereby the drag bar sustains the thrust of the shoe, while leaving it free to rock on its hinges."

After the words "drag bar," in the second line of the third claim, insert—

"Extending over and in rear of the shoe, the swivel pin

B. connecting the two."

After the words "drag bar," in the third line of the fourth claim, insert—

"Extending over and in rear of the shoe, the swivel pin connecting the two."

After the words "drag bar," in the second line of the fifth claim, insert—

"Extending over and in rear of the shoe, the swivel pin connecting the two."

C. Erase the ninth (9th) claim.

The above amendments are submitted in view of the official letter of October 7, 1875.

It is submitted, respectfully, that the patent of Manny, cited against the eighth claim, is not a sufficient answer to that claim. Manny shows a diagonal straining bar, secured at different points and for a different purpose and operating different. There could be no occasion for such a brace as ours, secured as ours is, in the Manny reaper, while with our organization of elements it is essential

668 and its function peculiar. A reconsideration of this claim is requested.

Respectfully,

L. J. McCORMICK,
WM. R. BAKER,
L. ERPELDING,
By their att'y, WM. D. BALDWIN.

(Endorsed is: "No. 4. 128–41. Amendments A, B, C. McCormick, Erpelding, and Baker. Harvester. Filed July 17, 1875. Patent Office, Nov. 13, 1875, U. S. A. McCormick, Baker, and Erpelding. Nov. 13, 1875. Inserted Nov. 19, 1875. Class 56.")

In the United States Patent Office.

In the Matter of the Application of McCormick, Baker, and Erpelding for Letters Patent for Improvements in Mowing Machines. Filed July 17, 1875.

Washington, D. C., *December 8th*, 1875.

To the Commissioner of Patents.

Sir: Amend the specification of the above-mentioned application as follows:

After claim 3 insert:

"4th. The combination, substantially as hereinbefore set forth, of the lateral brace or coupling arm attached to the

D. front of the shoe, the drag bar hinged to the rear of the shoe, and the lifting lever pivoted upon the drag bar and linked to the lateral brace to tip the cutters."

Change the numbers of the remaining claims correspondently with with this amendment.

We make the above claim in deference to official suggestions, and request the declaration of an interference with the application referred to by the office, feeling confident of our priority.

Respectfully, McCORMICK, BAKER, AND ERPELDING,
By their att'y, WM. D. BALDWIN.

669 (Endorsed is: "Amendment. McCormick, Baker, and Erpelding. Mower. Filed July 17, '75. No. 5. 128–41. Amendment D. McCormick, Baker, and Erpelding. Dec. 8, 1875. Patent Office, Dec. 8, 1875, U. S. A. Class 56.")

No. 1. Examiner's Room No. 97.

U. S. PATENT OFFICE,
WASHINGTON, D. C., *Dec. 10th*, 1875.

McCormick, Baker, and Erpelding, care Wm. D. Baldwin, Washington, D. C.

Imp't in harvesters. Filed July 17, 1875.

The 1st, 2d, 3d, 5th, 6th, 7th, and 8th claims may be allowed as at present advised. The 4th is not objected to, but is found to be in conflict with a pending application, with which an interference will be declared when all other questions are decided. The 9th is met in the patents of Manny, Jan. 22, 1856, No. 14148, and Oct. 21, 1856, No. 15927, hand-rakers. The 9th is, therefore, rejected.

WM. A. SUTPHIN, *Ass't Ex'r.*
J. G. PARKINSON, *Ex'r.*

(Endorsed is: "No. 6. 128–41. Office letter. McCormick, Baker, and Erpelding. Dec. 10, 1875. Class 56.")

In the United States Patent Office.

In the Matter of the Application of McCORMICK, BAKER, and ERPELDING for Letters Patent for Harvester (Mower). Filed July 17, 1875.

WASHINGTON, D. C., *Dec.* 11, 1875.

To the Commissioner of Patents.

SIR: Amend the above-mentioned application as follows:

E. Erase the 9th clause of the claim.

This amendment is submitted in view of the requirements of official letter of yesterday, but without prejudice to the
670 rights of applicants to urge the claim erased hereafter, by reissue, if deemed advisable.

Respectfully, LEANDER J. McCORMICK,
WILLIAM R. BAKER,
LAMBERT ERPELDING,
By their attorney, WM. D. BALDWIN.

(Endorsed is: "No. 7. 128–41. Amendment E. December 11, 1875. McCormick, Baker, and Erpelding. Harvester (mower). Filed July 17, 1875. United States. Dec. 11, 1875. U. S. A. Class 56.")

(No. 14.) (Interference.)

DEPARTMENT OF THE INTERIOR,
U. S. PATENT OFFICE,
WASHINGTON, D. C., *January* 6, 1876.

McCormick, Baker, and Erpelding, care Wm. D. Baldwin, present:

Please find below a copy of a communication from the examiner concerning your application for patent for imp't in harvester, dated the seventeenth day of July, 1875.

Respectfully, etc., R. H. DUELL,
Commissioner.

Room No. 97.

Your case above referred to is adjudged to interfere with application of Wm. N. Whitely, of Springfield, Ohio, filed May 9, 1874—attorney, R. D. O. Smith, Washington, D. C.—and the question of priority will be determined in conformity with the rules accompanying this. The preliminary statement demanded by rule 53 must be sealed up and filed on or betore the twentieth day of January, 1876, with the subject of invention and name of party filing it indorsed on the envelope. The subject-matter involved in
671 the interference is the combination of a lateral brace or coupling arm attached to the front of the shoe, a drag bar hinged to the rear of the shoe, and a lifting lever pivoted upon the drag bar and linked to the lateral brace to tip the cutters.

Whiteley's second claim interferes.

Applicants' fourth claim interferes.

J. G. PARKINSON, *Examiner.*

(Endorsed is: "No. 8. 128–41. Office letter. McCormick, Baker, and Erpelding. Jan'y 6, 1876. Class 56.")

Memorandum of Fee Paid at U. S. Patent Office.

Inventors, McCormick, Baker, & Erpelding.
Patent to be issued to ass'ees.
Invention, harvester.
Date of payment, July 27, '77.
2d fee, $20.
Baldwin, Hopkins & Peyton, solicitors.
Send to C. H. & L. J. McCormick, Chicago, Ills.

(Endorsed is: "United States, Jul. 27, 1877, Patent Office.")

128–41. 1875.
No. 193,770.

Leander J. McCormick, William R. Baker, and Lambert Erpelding, assor's to C. H. & L. J. McCormick, of same place, of Chicago, county of Cook, State of Illinois.

Harvesters.

Rec'd, July 17, 1875.
Petition, " " "
Affidavit, " " "
Specification, " " "
Drawing, 4 sheets.
Model, " " "
Cert. dep., —.
672 1. Cash, $15, July 17, 1875.
Add'l fee cert.
1. Add'l fee, cash, $20, July 27, 1877.
Examined, July 26, '77. J. G. Parkinson.
2. Issue, July 27, '77. F. A. Seely.
3. Patented July 31, 1877.
Circular, July 27, 1877.
Wm. D. Baldwin, present.

1875.

Contents.

Application paper.
1. Rej. Oct. 7, 1875.
2. Letter, X*a*, Nov. 6, 1875.
3. Letter, Nov. 18, 1875.
4. Amendment, Nov. 13, 1875.
5. Amendment, Dec. 8, 1875.
6. Rej. Dec. 10, 1875.
7. Amendment, Dec. 11, 1875.
8. Letter, X*a*, Jan. 6, 1876.
9. Decided in favor of McCormick *et al.* July 10, '77 (by Com'r).
Title: Improvement in harvesters.
Ex'd: J. A. W., M. McK.

672½ United States Circuit Court, Northern District of Illinois.
In Equity.

HUGH GRAHAM
vs.
CYRUS H. MCCORMICK, LEANDER J. MCCORMICK, & ROBERT H. MCCORMICK.

It is hereby stipulated by and between the parties to this cause, represented by their counsel, that any notary public or United States commissioner authorized to administer oaths, at the place where any

testimony is to be taken in this cause, may act as special examiner under the amended 67th equity rule the same as if specially appointed in this cause by an order of court, and also that all testimony to be taken herein shall be taken orally, in writing, by questions and answers and otherwise, as is provided in said amended 67th equity rule.

Dated Aug. 5th, 1879.

OFFIELD & TOWLE,
Def'ts Sol'rs.
BANNING & BANNING,
Solicitors for Complainant.

673 United States Circuit Court, Northern District of Illinois.
In Equity.

HUGH GRAHAM
vs.
CYRUS H. MCCORMICK, LEANDER J. MCCORMICK, & ROBERT H. MCCORMICK.

At Chicago, in the northern district of Illinois, on this 6th day of August, 1879, before me, John H. Whipple, a notary public within and for Cook county and residing at said Chicago, at the office of Offield & Towle.

Present: Mr. C. K. Offield, on behalf of the said defendants, and Mess. Banning & Banning, on behalf of the said complainant.

And thereupon the following proceedings were had before me in said cause pursuant to annexed stipulation:

The defendants' counsel here offers in evidence certified copies of letters patent of the United States and documents & models as follows:

1. Letters patent to Jonathan Haines, September 4, 1855, No. 13523, marked Defendants' Exhibit Haines Patent No. 13523 and the reissues thereof.

2. Letters patent to G. C. Dolph, September 8, 1857, No. 18141, marked Defendants' Exhibit Dolph Patent No. 18141.

3. Letters patent to C. Aultman & Co., May 4, 1858, No. 20180, marked Defendants' Exhibit C. Aultman & Co. Patent No. 20180.

4. Letters patent to Stetson — Maynard, May 17, 1859, No.
674 24063, marked Defendants' Exhibit Stetson & Maynard Patent No. 24063.

5. Reissued letters patent to C. Aultman & Co., July 19, 1859, reissue No. 766, marked Defendants' Exhibit C. Aultman & Co. Reissue Patent No. 766.

6. Letters patent to David Zug, Oct. 4. 1859, No. 25697, marked Defendants' Exhibit Zug Patent No. 25697.

7. Letters patent to E. Ball, Oct. 18, 1859, No. 25797, marked Def'ts' Exhibit Ball Patent No. 25797.

8. Letters patent to Bartlett & Dodge, February 25, 1862, No. 34545, marked Defendants' Exhibit Bartlett & Dodge Patent No. 34545.

9. Letters patent to John A. Dodge, May 23, 1865, No. 47807, marked Defendants' Exhibit John A. Dodge Patent No. 47807.

10. Letters patent to Ray & Grant, November 14, 1865, No. 50956, marked Defendants' Exhibit Ray & Grant Patent No. 50956.

11. Letters patent to Frank Bramer, Dec. 19, 1865, No. 51546, marked Defendants' Exhibit Frank Bramer Patent No. 51546.

12. Letters patent to McCormick & Erpelding, January 15, 1867, No. 61228, marked Defendants' Exhibit McCormick & Erpelding Patent No. 61228.

13. Letters patent to Andrew Wemple, January 29, 1867, No. 61644, marked Defendants' Exhibit Andrew Wemple Patent No. 61644.

14. Letters patent to A. B. Graham, July 23, 1867, No. 67041, marked Defendants' Exhibit A. B. Graham Patent No. 67041.

15. File wrapper, contents, and drawings in the matter of
675 the letters patent No. 67041, granted A. B. Graham, assignor to self & Wm. B. & Cyrus A. Werden, marked Defendants' Exhibit Graham & Werden File Wrapper to Patent No. 67041.

16. File wrapper, contents, and drawings in the matter of the letters patent No. 74342, granted to Alvaro B. Graham Feb. 11, 1868, marked Defendants' Exhibit File Wrapper to Patent No. 74342.

17. Certified copy of tracing drawing of the letters patent granted A. B. Graham, dated July 23, 1867, No. 67041, marked Defendants' Exhibit Tracing Drawing of Patent No. 67041.

(Objected to as incompetent by comp't's counsel.)

18. Certified Patent Office duplicate of part of model in the matter of letters patent granted David Zug October 4, 1859, No. 25697, marked Defendants' Exhibit Zug Certified Duplicate Model Patent No. 25697.

19. Certified Patent Office duplicate of part of model in the matter of the letters patent granted Stephen S. Bartlett, assignee to self & F. H. Dodge, Feb. 25, 1862, No. 34545, marked Def'ts' Exhibit Duplicate Model Bartlett & Dodge Patent No. 34545.

20. Certified Patent Office duplicate of model in matter of letters patent to Samuel Ray & Eli Grant, November 14, 1865, No. 50956, marked Defendants' Exhibit Duplicate Model Ray & Grant Patent No. 50956.

21. Certified Patent Office duplicate of part of model in the matter of letters patent to Frank Bramer, December 19, 1865, No. 51546, reissued Feb. 27, 1877, reissue No. 7539, marked Defendants'
676 Exhibit Bramer Duplicate Model Patent No. 51546.

The defendants' counsel then calls Mr. DAVID J. POWERS as a witness, who, being duly sworn to testify the truth, the whole truth, and nothing but the truth in said cause, deposes as follows in answer to questions by Mr. OFFIELD:

Q. 1. State, if you please, your name, age, residence, and occupation.

A. David J. Powers; age, 65 years; residence, Chicago; occupation, mechanical engineer and manufacturer.

Q. 2. Please state what has been your experience with letters patent and patented machinery and otherwise, and, briefly, what, if any, experience you have had as an expert in patent causes, and give your answer more particularly in reference to your familiarity and knowledge of what is commonly known as harvester patents and machinery.

A. I have been engaged in mechanical pursuits the most of my life and have had the charge of the construction and operation of a great variety of machinery at different periods of my life. I have studied patents and patented inventions for twenty years past, and during that period have gotten up a good many devices to be patented for myself and others, and, among other things, have gotten up several inventions relating to reapers and mowers and harvesting machinery, and when so engaged I gave careful study to the state of the art relating to that class of machines and devices. I have also used such machinery quite extensively
677 in farming operations in which I have been engaged at different periods. I have also handled harvesting machinery extensively as a State agent for several years in the way of introducing, selling, and assisting in the putting up and operating of the same in the field. I have also been present at numerous trials of harvesting machinery, among which I will refer to the great Auburn, N. Y., trial of 1866, at which nearly 100 different machines were tested for a period of nearly three weeks by scientific and practical men and the aid of the best known testing instruments for the purpose. I have also often been called in patent litigations as an expert in the United States courts and in several causes in which harvesting patents and machinery were involved. The foregoing are some of the opportunities I have had of becoming familiar with patents and patented devices, and more particularly with reapers and mowers and harvesting machinery, in all of all of their various constructions and operations.

Q. 3. Have you carefully examined and do you thoroughly understand each of the letters patent just offered in evidence in your presence and being at the time of asking this question 14 in number?

A. I have carefully examined all of said patent exhibits and believe that I fully understand the devices therein shown & described.

Q. 4. Did or did not your examination extend to and will or will not your answer apply to the certified & duplicate models of
678 the Frank Bramer, Bartlett & Dodge, and Zug patents?

A. Yes; I examined the models in connection with the patent exhibits in all cases in which there were models.

Q. 5. Please examine the model now shown you and state what it represents.

A. On examining said model I find it to represent the principal frame and wheel structure and the manner of attaching the finger bar of the E. Ball mower, of patent of October 18, 1859, No. 25797.

Q. 6. Is or is not this model a correct representation of the Ball mower, according to the drawings and specifications of said patent, so far as it purports to represent the same?

A. It appears to me to be so in all material respects—substantially so, at least.

Defendants' counsel here offers in evidence the said model and requests the notary to identify it with this record by marking it Defendants' Exhibit Model Ball Machine.

679 Q. 7. Please look at and carefully examine the model which I now show you & and state what it represents.

A. I find said model to represent the main portions of the Alvaro B. Graham patent of July 23, 1867, No. 67041; said model shows the wheel and frame structure and also the finger bar and the manner of attaching the same to the frame, together with its lever devices for operating the same, and on comparison of it with the patent I find it to be substantially identical, so far as it goes, with the devices therein shown and described.

Defendants' counsel here offers in evidence this model and requests the notary to identify it with this record by marking it Defendants' Exhibit Model Graham Patent, 1867.

680 Q. 8. Please examine complainant's Graham model No. 2, McCormick mower—L. T. Banning, examiner—and state whether you find in such model the inventions and arrangements described, claimed, and set forth in A. B. Graham's letters patent of February 11, 1868, in the first and second claims of said patent, and give your reasons for any opinion you may express. Please answer the question in the light of your examination of the patents and models above examined by you and offered in evidence; or, if you prefer and find it more convenient, you may state first what you find to be the invention, if any, described and claimed in the first and second claims of the 1868 Graham patent and then answer the question.

A. On examining the complainant's model No. 2 of the McCormick mower and comparing its several devices and combinations with the several devices shown, described, and summed up in the two first claims of the Graham patent, I would answer that I do not find the same invention or inventions in the said McCormick mower that are summed up in the said Graham patent. I find the devices arranged and operating in the said McCormick model to be materially different, both in their construction and operation, from those summed up in the said claims of the Graham patent. The first

681 claim of the Graham patent is for the combination, in a harvester, of the finger beam with the gearing carriage by means of the vibratable link, the draft rod, and swivel joints M & M′, so that the finger beam may both rise and fall at either end & rock forward and backward. In the McCormick mower exhibit I find, in combination with the gearing frame, a vibratable link connection with the finger bar not very materially different from the vibratable link in Graham. The draft rod in the McCormick machine is, however, materially different from the one found in Graham, in this, that its forward connection is not a swivel joint, nor anything in any way resembling a swivel joint, being hinged in a mortise afford-

ing no torsional action whatever, while the draft rod at the rear end or point connected with the shoe will be found to be at the extreme rear end of the shoe, or nearly so, while the draft rod in Graham is stated in the patent to have swivel joints at both its forward and rear ends, and has such joints substantially of a free torsional capacity.

This draft rod in Graham is also attached to the shoe in the front of the finger bar instead of at the extreme rear end of the shoe, as in McCormick. These different arrangements in the two machines cause them to operate in a materially different manner, the one from the other, in the respect that in the Graham having the draft rod joined in the front of the shoe & being acted upon
682 in the manner that it is by its rocking lever, in a manner that I will hereafter explain, enables the finger-bar to rock freely both forward and back in such manner that the rear of the finger-bar may be elevated and the guards thrown down on the front of it may be elevated, and the guards thrown up with an equal rocking motion in either direction, whereas in the McCormick device it will be seen that the draft rod, connection of the shoe at the rear end of it causes the finger-bar, when operated upon by its lever, instrumentalities, to simply rise and fall in front with a swing motion from the pivoted point.

It will further be seen that the finger bar cannot be raised at all at the rear by the lifting lever in the McCormick machine, and can only be raised, as before said, in front, and cannot be carried down by the lever, but simply falls of its own weight when released. Thus it will be seen that the finger bars in the two respective devices are materially and substantially different, the one from the other, and that the McCormick machine has not got the forward and back motion at all that is summed up in the first claim of Graham; and while it may have the rising and falling motion of the outer or inner end of the finger bar, not having the rocking or rolling motion forward and back, it therefore does not contain the devices
683 and combination of the first claim of Graham, neither in construction nor operation—the construction being materially different and the operation equally so.

The second claim in the Graham patent exhibit is for the same devices as the first claim, in combination with an arm by which the rocking of the finger beam can be controlled.

This arm, in Graham, it will be noticed, has a rigid connection with the vibratable link to which it is attached, and through the instrumentality of this rigid arm his finger beam can be made to rock backward and forward absolutely and positively, so as to give said finger beam a rocking or rolling motion to any extent desired. In the McCormick model, Compl't's Exhibit No. 2, no such rigid arm will be found in connection with the vibratable link, nor anything equivalent therefor, but in lieu of it only a lever connection, by which the finger bar can be lifted in front, while the said bar falls by its own weight when released, instead of being carried down by the lever, as in Graham. Thus I do not find in the McCormick machine any arm by which the rocking of the finger beam is controlled, but in lieu thereof a simple & old-fashioned lifting device

by which to lift and raise it in one direction; for all of which reasons I do not find the devices or combinations enumerated in the second claim of the Graham patent in the McCormick machine.

684 In the light of the state of the art, as shown in the exhibits before me, I will more fully state my views as to the invention of the said Graham patent, as well as my reasons why I do not find it in the McCormick machine.

In tracing the state of the art relating to the manner of attaching finger bars to reapers and mowers so as to give the motions desired for the purposes in question, and the manner of imparting said motions to finger bars, the first instance I met with of attaching a finger bar with some degree of free and independent motion from the frame is that of Jonathan Haines, of September 4, 1855, in which it will be seen that he attached his finger bar in the rear of his machine by means of two long draft rods extending forward and connecting with the front beam of the frame, such connection being a hook or swivel connection, which allowed the finger bar to fall freely upon the ground and to follow the surface of the ground independent of the frame. He had a rising and falling motion of the finger bar and the lever, adapted to produce this motion, but he had no rocking motion to his finger bar forward and back, and no rigid arm by which to rock it; but, limited as his motions were, it was still a new departure in the manner of attaching finger bars.

685 The next device approximating to the inventions at issue in this case is the patent of G. P. Dolph, of September 8, 1857. This mower shows the finger bar attached to the rear of the frame by means of a vibratable link substantially like the one found in Graham and a draft rod located substantially the same as Graham's draft rod, but the hinges or connections of the draft rod and vibratable link are not swivel or free joints. The finger bar could clearly be raised or lowered at either end and could be elevated or depressed slightly in front by means of an up-&-down motion of the draft rod in front, but the finger bar could not have had a very material amount of rocking motion; still it was capable of being raised and lowered at the guards of the finger bar more nearly like the McCormick machines than Graham's. I would here state that when in my answers I refer to Graham's model No. 1, for brevity I call it Graham's machine, representing his patent of 1868, and also in referring to Graham's model No. 2 McCormick mower, for the purpose of brevity I call it the McCormick machine.

The next machine to which I shall refer is that shown in the patent to C. Aultman & Co., of May 4, 1858, No. 20180. This machine shows a finger bar attached to the front of the frame with such joints and connections as to admit of a free rising-and-falling motion of the finger bar and with ordinary lever devices for raising the same. It does not appear to have possessed any tortional or rocking function.

686 I will next refer to the reissue of the last patent of July 19, 1859, reissue No. 766, and simply state that it shows the same construction and operation and is substantially the same machine last described.

Stetson & Maynard Patent Exhibit No. 24063 shows a machine with a finger bar jointed to the rear end of the frame by means of a cylindrical formed connection, with the finger bar inserted in collars or bearing upon the rear end of the frame in such manner as to admit of its terning or rocking freely forward & back in such bearings. To this cylindrical arm, connected to the finger bar, is attached a rigid lever extending forward to near the driver's seat, by which the said driver could rock the finger forward & back or up or down to any extent desired.

This construction admitted of a rising-and-falling motion to either end of the finger bar, and also of a rocking forward-and-backward motion, and this rocking motion produced by a rigid lever extending to the driver's seat, thus embodying substantially all of the motions and instrumentalities for producing those motions that are enumerated in the first and second claims of the Graham patent. Thus all of the motions and capabilities of the Graham patent & machine existed in this earlier machine of 1859, and the only differences between them consist of such differences in construction as are observable on a comparison of the two devices.

687 The next exhibit in order is that of David Zug, of October 4, 1859, No. 25697. This Zug machine shows a finger bar attached to the rear end of the machine by a vibratable link and the draft rod substantially like those shown in machines already referred to, with the additional difference that the vibratable link is attached at its rear end loosely to the machine, & the said vibratable link is also fitted loosely within the draft rod in such a manner as to admit of a considerable rising-and-falling motion to the front end of the shoe, by which the guard fingers could be elevated and lowered to a considerable extent and in substantially the same manner as they are capable of being raised and lowered in the McCormick machine. The raising and lowering in this Zug machine is also accomplished at a similar point and in a somewhat similar manner to said McCormick machine. This rising-and-falling motion of the finger bar in Zug, as before stated, is substantially the same as in McCormick, and only differs in degree.

If the Zug machine had been given somewhat more of a rising-and-falling motion upon the guards on front of the finger bar, I do not see where it would have differed substantially in those respects from the combinations and movements in the McCormick machine for the same purpose.

688 I therefore consider that the McCormick machine much more nearly resembles Zug in its attachments and motions than the patent of Graham of 1868.

The next exhibit is that of E. Ball, of October 18, 1859, No. 25797. This machine shows a finger bar attached by a free hinged vibratable link and also a free hinged draft rod that is free hinged at its front end.

To this draft rod is attached a shoe at its rear end, said shoe also being attached at the rear end of the draft rod with a free up-and-down hinged joint.

In front of this hinge is attached the finger bar of the machine,

and its hinged connection admits of the rising and falling of said shoe and finger bar upon its front side. This motion of the finger bar in rising and falling is not a rocking or rolling motion, as in Graham, but a rising-&-falling motion substantially identical with that found in McCormick, the only material difference being that the draft rod extends under the shoe and finger bar and prevents the shoe or finger bar from falling down lower than a level, whereas in the McCormick machine the draft rod extends over the shoe and finger bar to the same point of attachment, as in Ball, & thus, being out of the way underneath, allows the finger bar to fall lower than in Ball, to fall even below a level, to any extent desired.

Aside from this difference pointed out between the two machines I see no other material one in these respects. The finger bar in
689 the Ball machine can rise or fall as freely at either end as can the McCormick or Graham machine, and the rising-and-falling motion of the Ball, as before stated, as far as it goes, is as perfect in Ball as in McCormick, but wholly unlike the rocking or forward-and-backward motion in Graham. For the foregoing reasons I consider the McCormick machine much more clearly resembles the Ball, both in construction and operation, than it does the Graham machine or device.

The next exhibit in order is the Bartlett & Dodge patent, of February 25, 1862, No. 34545. It shows a machine with a finger bar attached at its rear by a vibratable link, with a swivel joint at its outward end and a free joint at its inner end, in connection with a shoe and a draft rod extending from the front end of the machine to the rear end of the shoe, and a finger bar attached to the shoe in front of the vibratable link. The draft rod is adapted at the front end of the machine so that it can rise and fall in a circular groove, and a double rock lever is adapted to the machines above the draft rod, with one arm extending forward and the other backward, to the respective ends of which chain connections are made to the front end of the draft rod and the vibratable link near the shoe, so that the rocking of the lever forward & back causes the finger bar and draft rod to rise and fall in such a manner as to cause the finger bar to rock forward and back substantially the same as in the
690 Graham machine, the only material difference being that the draft rod extends further forward than does the vibratable link connection in Graham, and this causes a somewhat less perfect rocking forward-and-back motion than in Graham; still it has indisputably a considerable forward-and-back rocking motion, with substantially rigid lever devices with which to rock it, and it also has the rising-and-falling motion of the finger bar at either end substantially identical with those in Graham. Therefore I consider this device, broadly considered, anticipates Graham and limits him to his special device.

The Graham clearly shows a different construction and, perhaps, an improvement upon Bartlett & Dodge, but, as before said, Bartlett & Dodge have the rising-and-falling and rocking motion, broadly considered, and the means for producing it.

The examination was here adjourned until Friday, Aug. 8th, 1879, at 10 o'clock a. m.

AUGUST 8, 1879.

The parties met pursuant to adjournment.

Present: Same as before, and the witness resumed his answer to question 8, as follows:

691 The John A. Dodge patent, of May 23, 1865, No. 47807, shows, so far as the manner of connecting the finger bar to the frame is concerned, substantially the same construction as the E. Ball machine, to which I have already referred. It has the same free vibratable link connection in the rear and free jointed draft rod from the front of the machine, and upon which is hinged at its rear end a shoe carrying the finger bar, said shoe and finger bar having the same capacity of rising and falling in front as in the said Ball machine; thus, this machine simply shows a rising-and-falling motion of the guards upon the finger bars and not a rocking motion.

This motion in Dodge is identical with that of the finger bar in the McCormick mower, except that the draft rod, lying underneath the shoe instead of over the shoe, as in McCormick, to a certain extent limits the downward drop of the finger bar to the same extent as in the McCormick machine, Comp't's Graham Model Exhibit No. 2.

The Ray & Grant patent, of November 14, 1865, No. 50956, together with the certified Patent Office model thereof, shows a vibratable link connection of the cutting devices of the machine, and also a supporting draft rod, with a shoe so connected with the vibratable rear link and draft rod that the finger bar can be raised readily at either end, and through the instrumentality of a rigid lever or arm connected therewith can be freely rocked forward

692 and backward to the fullest extent that could be required in practical use. Thus, this machine shows all the motions and functions of the Graham machine, and is capable of performing all its movements and operations as described and embodied in both the said first and second claims of the said Graham patent, Complainant's Exhibit No. 1.

In support of this statement I quote as follows from the specification of the patent of Ray & Grant:

"The shoe and finger bar can be readily adjusted to any inclination, either way, for the purpose of passing over obstacles or to be adapted to the inclination of the ground."

Such is the language of the specification, and its correctness may be readily seen by an examination of the certified model of the patent.

It is constructed somewhat differently mechanically from the Graham device, but is clearly the same thing substantially, so far as its functions and operations are concerned, and, while the Graham device may be possibly a modification or an improvement upon the Ray & Grant in its precise construction, it must be clearly seen

that Ray & Grant would limit the Graham invention substantially to its particular construction.

I am further confirmed in the correctness of the view from the following clause of the specification which I will quote:

"These rods thus connected to the shoe act as braces to keep the shoe in place, and at the same time allow it to be vibrated or moved to any inclination by the hand lever I, for by means of the lever R and link P, pivoted to the arm L, the braces can be adjusted
693 to any position of the shoe."

This quotation more fully explains & shows the operation of the rocking lever and its connection substantially with the shoe and finger bar.

The next patent exhibit and certified model is the Frank Bramer, of December 19, 1865, No. 51546. This patent and model exhibit shows a mowing machine with its finger bar attached at the front end of the frame by means of a transverse vibratable link pivoted near the outside & underside of the frame by a ball-&-socket joint, which allows the vibratable link and finger bar attached thereto to rise and fall freely, and also to rock or roll forward & back. To this vibratable link is attached a brace or push rod, which extends to and is connected with the rear of the frame by free joints, admitting of an entire freedom of action for the finger bar, both up and down, at either end, and forward and back, to the fullest extent required in the practical operation of a mower. To the vibratable link is attached a chain, extending up to the lever and lifting device, by which said finger bar can be raised and lowered.

This construction of the machine, it will be seen, so far as the vibratable link connection and the point of pivoting the draft or push rod is concerned, is substantially identical with that of the Graham invention, as enumerated in the first claim thereof,
694 and has all the functions and capabilities of operation and devices therein contained—a mechanical construction of parts on account of the attachment of the same to the front of the machines differ- somewhat from those in Graham, but in no respect in principle or operation. This Bramer machine does not show the combination of the second claim of Graham, it having no rigid connection between the finger bar and lever by which the said bar can be positively moved or rocked forward & back, but it shows substantially the same means for rocking the finger bar as is found in the McCormick machine, Graham's Exhibit No. 2.

In support of my position I will quote as follows from the specification of Bramer: "The swing bar J, which unites the cutting apparatus to the frame of the machine, is attached by a ball-and-socket joint which permits the cutting devices to adjust themselves to the surface of the ground automatically."

This language clearly implies that the finger bar in Bramer can clearly adjust itself to the surface of the ground by rising or falling at either end or by rising and lowering, forward or backward, either way, thus having all the motions and functions of Graham, as enumerated in his first claim.

This striking similarity of construction & complete and perfect

similarity of operation clearly left but very little for Graham to invent, so far as the combination and devices of his first
695 claim are concerned. To more fully illustrate my views I will now quote the first claim of the Graham patent of 1868, Complainant's Exhibit A:

"The combination, as set forth, in a harvester, of the finger beam with the gearing carriage by means of the vibratable link, the draft rod, and swivel joints M and M', so that the finger beam may both rise and fall at either end and rock forward and backward."

My object in this quotation is to refer to the elements of the claim of swivel joints M and M', by which the draft rod is connected with the frame and finger bar or beam in the Graham machine, and to say that the Bramer machine, in this respect, does not contain swivel-joint connections, but it has loose or free joint connections that give the same motions and serve precisely the same purpose, to the fullest extent required, as do the assumed swivel joints in the Graham machine. It will be noticed that the joints in the Graham machine are not strictly swivel joints any more than the Bramer machine, but in both cases they are joints with sufficiently free tortional functions to perform the office required of them. Hence, as before said, and in all material respects, I consider the Bramer machine an almost clear anticipation of the Graham machine, so far as the first claim is concerned, if not entirely so.

696 The McCormick & Erpelding machine of January 15, 1867, patent No. 61228, shows a mower with the finger bar connected with the frame by means of a hinged supplemental frame which is free to rise and fall, and to which the finger bar is hinged by free joints, both forward and back and right and left, of such a character as to admit of the said finger bar being raised and lowered at either end, or to rise and fall at the front or guard side of said finger bar, the shoe of the finger bar being joints- to the supplemental frame near its rear end in such a manner that the said rear end of the shoe rests at all times upon the ground when mowing, except when raised up from the ground to pass obstructions, while the front end of the shoe, with the finger bar, by means of a lever instrumentality connected therewith, can be raised at pleasure and lowered, or the said finger bar can freely rise and fall, depending upon the surface of the ground that it is passing over. This organization of the parts that I have stated, and this rising and falling of the finger bar from its rear pivotal point, it will be clearly seen, is not a rocking or rolling motion of said finger bar, as is found in Graham and Bramer, but is, on the other hand, a rising-and-falling motion substantially similar to what is found in the E. Ball and John A. Dodge machine, previously referred to and explained, as well as in other machines not enumerated.

697 This rising-and-falling motion in the McCormick machine of 1867, it will be seen by comparison, is substantially identical with the rising-and-falling motion in the McCormick machine as shown in the Graham model, Complainant's Exhibit No. 2.

The construction of the two machines will also be seen to be substantially alike, by which these similiar motions of finger bar are

attained, the difference consisting in the employment of the supplemental frame in the machine of 1867 instead of the jointed drag bar or draft rod, as shown in the Graham model, Exhibit No. 2, McCormick mower, this draft rod in Exhibit No. 2, McCormick mower, being jointed to the under side of the main frame in substantially the same manner as is the supplemental frame and operating in substantially the same manner, in conjunction with the vibratable link connection, as does the supplementall frame connection in the McCormick & Eperling machine of 1867. Thus I regard the McCormick & Erpelling machine of 1867 as substantially identical in its construction and operation, so far as the manner of attaching and operating the finger bar is concerned, with the McCormick mower, Complainant's Graham Exhibit No. 2, and at the same time this McCormick and Erpelling machine, so far as these finger-bar devices are concerned, is substantially unlike the Graham machine,
698 especially in the rising-and-falling motions of the finger bar, as I have before stated.

The Andrew Wemple machine, of January 29, 1867, No. 61644, shows a construction in many respects similiar to the machine of Stetson and Maynard, to which I have already referred, its finger bar being jointed or hinged to a cylindrical shank which fits in journals or a sleeve upon the rear end of the frame.

To the aforesaid cylinderical shank is attached a rocking lever, extending to and within the reach of the driver on the driver's seat. Through the instrumentality of this rocking lever the finger bar can be rocked forward or back to any extent required, and, owing to the rising-and-falling function of the rear end of the frame and the hinged joint of the finger bar, said bar may be made to rise or fall at either end. Thus this Wemple machine substantially and broadly contains the same elements of motion and capacity of operation that is found in the Graham invention, in both the first and second claims. As before said, its finger bar may be made to rise or fall at either end, and to rock backward and forward, by a rigid lever connection. The construction of this machine, however, is somewhat different in the manner of hinging or attaching the finger bar to the frame and could not, therefore, perhaps, be properly
699 held to anticipate Graham, except in a broad sense, and operating in that respect to limit the scope and extent of the Graham invention.

On examining the A. B. Graham patent, dated July 23, 1867, and No. 67041, and the model thereof and comparing them with the Complainant's Patent Exhibit A and model No. 1, I find a substantially identical construction and combination of elements in the two devices, so far as relates to the manner of attaching the finger bars of the machines to the frames, and also in the manner and means of operating said finger bars, in most particulars.

In both devices is found a rear vibratable link connection, which is jointed at its rear end, with a double motion, admitting of its both rising and falling and rocking longitudinally to this vibratable link, through the medium of a shoe. The finger bars are attached in both instances by a free up and down jointed hinge, and in both cases a

draft rod is hinged loosely at the front end of the frame and, extending backward, is jointed with a double-jointed hinge to the front end of the shoe of the finger bar.

To each of the vibratable link- is also rigidly connected a vertical arm, connected at its top with a rocking lever, by means of which in both cases the respective finger bars can be rocked absolutely either forward or backward, so as to raise or depress the guards on said finger bar, either above or below a horizontal, to any
700 extent that the unevenness of the ground or other reasons may render desirable.

These finger bars may also be made to rise and fall at either end, with an entire freedom of action, whenever necessary.

In both cases the motion by which the guards are raised and lowered is what is known as a rocking or rolling motion, such a motion as is produced by the central hinging of the vibratable link and shoe and finger bar substantially in a transverse line to the line of draft, so that the device rocks upon its own center equally both ways, forward and back, with an entirely different motion from what is found in machines where the shoe is pivoted at its rear end to a rigid support and rises and falls upon such back pivoted motion. Thus in these two machines I find precisely the identical construction, so far as the essential parts are concerned, together with the same identical rising and falling and rocking motion when operated, and identically the same rigid arm attachments with which to produce the rocking motion. Some slight and immaterial differences will be noticed in the mechanical form and construction of subordinate parts, but no material differences will be found between the two, either in principle or adaptation of parts, or in the operations of said parts, or in the results attainable.

Thus, in view of the identical similarity of these two devices, both in the patent exhibits of each and in the models before me,
701 I am led to the conclusion that the assumed invention of both the first and second claims of the Patent Exhibit A and model No. 1 clearly represent old and well-known devices at the date of the said patent, and that in view of the Graham invention of 1867, which I notice by the file wrapper and contents of the application for said patent that the application for said patent was made from three to four years before the date of said patent, that under the facts and circumstances of the case there was little or nothing left, so far as I can see, to be embodied in the Graham patent of 1868, except it might have been in some subordinate and new and improved ways of doing substantially the same thing in substantially the same way in nearly the same identical manner.

On examining the Defendants' Exhibit Tracing Drawing of Patent No. 67041 and comparing the same with the specifications and drawings of the Def't's Graham Patent Exhibit of 1867—

I find them to be, to all appearance, correct and true copies of said patent, and, being upon an enlarged scale, the various parts of said machine are more readily seen and more easily understood.

In conclusion, I would repeat that I do not find in the McCormick mower, Graham's Exhibit No. 2, the inventions or either of them

summed up in the two first claims of Complainant's Patent Exhibit A, for the reasons that I have stated in detail in my explana-
702 tion of the several patents and models to which I have answered, among which were that the construction and operation of the McCormick machine is radically and materially different from the Graham machine & patent, so far as the first claim thereof is concerned, and for the reason that it has no such elements in combination as the second claim enumerates in the way of a rigid arm with which to control the finger bar, which in McCormick only has a lifting lever and relies upon gravity and gravity alone to carry down the finger beam, and for the further reason that I find in the Zug & Ball and Dodge machines substantially the same manner of attaching and lifting the finger bar, and also in the McCormick and Erpelling machine of 1867, which is older than Graham of 1868, substantially the same construction and mode of operation as I find in the McCormick mower, Graham Exhibit No. 2.

I also fail to find the devices and combination in said McCormick mower for the reason that I have found in the Bartlett & Dodge patent exhibit and model and in the Ray and Grant patent exhibit & model and the Frank Bramer and in the A. B. Graham, 1867, substantially or identically all of the devices and combinations enumerated in the two first claims of the said Graham patent. For all of the foregoing reasons I fail to find, in view of the state
703 of the art, the Graham devices and combination enumerated in the two first claims of said patent or anything substantially like them, either in construction or operation, in the McCormick mower, Graham's model No. 2.

Q. 9. Please state whether or not, in your opinion, the loose-jointed shipping rod connected with the lifting lever and attached to the inner side of the vibratable link near the shoe in Exhibit 2, McCormick machine, by which the cutter bar is raised and its position changed, is the equivalent or performs in any respect the functions of the "arm" set forth in the second claim of Graham's 1868 patent.

A. I do not consider said rod to be in any sense the same or the equivalent of the arm referred to in the question, but only to be a connection between the lever and the vibratable link, operating in no respect —, so far as raising the finger bar is concerned, than would a chain in the same connection. It simply serves to lift the bar, but not to carry it down, as would a rigid connection. You could not rock a bar properly with such a connection, for the reason that it would only act upon it one way, whereas to produce the rocking motion it must act upon it in two directions. Therefore, I only regard this bolt connection the same as a chain or any other connection by which which the finger bar could be lifted. I sup-
704 pose this bolt and nut is substituted for a chain, for the reason that it can be more readily adjusted than could a chain.

Q. 10. Then, as I understand you, in the McCormick mower it makes no difference whether the connection between the lever and the vibratable link in a chain or a loose-jointed shipping rod, so far as the movements of the cutter bar are concerned?

A. I consider that it makes no difference whatever, so that there is a loose-jointed connection there by which you can raise the cutter bar or the front side of it.

Q. 11. What, in your opinion, if anything, is absolutely essential to produce the rocking or rolling motion of the finger bar, as described and shown in the Graham patent of 1868 and the complainants model No. 1, when such motion depends upon the volition of the operator or driver?

A. In such case it is necessary that there be a rigid connection, or one substantially so, upon the finger bar and the lever, so that the operator can force it in either direction—forward or back.

Q. 12. In your opinion, could the rocking or rolling motion of Graham's 1868 patent and his model No. 1 be produced by substituting the loose-jointed slipping rod or a chain as a connection between either lever and the vibratable link in any manner?

705 A. I think not; and for the reason, as I have before stated, that a thing to be rocked must be centrally pivoted; therefore, to give it the two motions, absolute and certain force must be applied, as gravity cannot be relied upon, except when the pivoting is upon one side, as in the McCormick mower.

Q. 13. Would any mechanic ordinarily skillful in his calling have any difficulty in constructing a model or machine in accord*ing* with the drawings and specifications of the Graham 1867 patent? Please answer the questions more particularly with reference to the cutter bar and the mechanism for operating the same.

A. No; I should presume not, as the specifications appear to be clear and full and ample.

Q. 14. Have you examined and are you familiar with a full-sized mower recently shown you? And, if so, state what it represents.

A. I have examined and am familiar with the machine enquired about and it represents a machine shown and described in the patent of McCormick & Erpelling of 1867, to which I have referred in my testimony.

Q. 15. Is or is not this full-sized mower built in accordance with the drawing & specifications of the said McCormick 1867 patent?

A. It appears to be, so far as I can discover, in all respects built in accordance with the specifications and drawings of said patent.

706 The defendants' counsel here offers in evidence the mower just referred to and requests the notary to identify the same with this record by marking the same Defendants' Exhibit Full-Sized McCormick Mower, 1865.

707 Q. 16. What difference do you find, if any, between the movements of the cutter bar in this last Exhibit McCormick's Full-Sized Mower and the movements in the cutter bar in complainant's model No. 2, McCormick mower, and please state also what difference, if any, you find in these two machines as to the mechanism producing or allowing such motion.

A. I find no material difference between the two machines as to construction and the movements that the cutter bar is capable of making; the shoe of the cutter bar in both cases is pivoted near its

rear end, where the shoe in both machines rests upon the ground when in operation. In both machines there is a lever jointed to this back support of the shoe and connected to the front end of the shoe by which said shoe and the front side of the finger bar can be raised by the driver, and in the full-sized machine exhibit this connection is rigid and enables the driver to both lift and depress the finger bar by a positive force, while in the model machine, Comp't's Model Exhibit No. 2, the level only has a loose or lifting connection with the shoe and does not admit of the driver's forcing the shoe and finger bar down with the lever, but gravity only is relied upon for carrying it down. I therefore find the two devices substantially identical in all respects, as to construction and
708 capability of motion of the finger bar, except the difference pointed out, that in the model Exhibit Compl't's No. 2 the shoe and finger bar cannot be forced down by the lever, as before stated.

Cross-examination by Mr. EPHRAIM BANNING:

X Q. 1. You were the expert for the complainant in the case under this same patent No. 74342, by this complainant against Gammon & Deering, decided by Judge Blodgett something over two years since, were you not?

A. Yes; I think I was.

X Q. 2. State which of these patents now offered in evidence by the defendants were offered in evidence by the defendants in that case.

A. To the best of my knowledge, the following is the list: The G. C. Dolph, the C. Aultman original and reissue, the E. Ball, the David Zug, the Bartlett & Dodge, and the A. Wemple; also the John A. Dodge.

X Q. 3. Do you consider the rocking or rolling motion of the finger bar an important feature in the mowing machine?

A. I do.

X Q. 4. What is meant by an axial rocking motion of the finger bar?

A. I understand it to be a central rocking motion in its most proper definition substantially like what we find in the finger-bar motion of the Graham patent of 1868; I think, however, that the term axis is sometimes applied, and perhaps properly, to de-
709 vices away from their centers, although more generally applied to devices centrally or nearly centrally pivoted.

X Q. 5. From your examination of these patents offered in evidence by the defendants and knowledge of the art from other sources, which do you consider to be the first patent that provides means to enable the driver to control the rocking motions of the finger bar from his seat while the machine is in full motion?

A. To the best of my knowledge and present recollection, the Stetson & Maynard of 1859 shows a complete rocking motion of the finger bar and a rigid lever in connection therewith by which to rock it. This patent, however, does not show a connection free and

independent from the frame of the finger bar, the supports of the finger bar being attached directly to the rear of the frame.

X Q. 6. Which do you consider to be the first that provides for the controlling of the rocking motions of the finger bar by the driver from his seat while the machine is in motion, in such a way as not to affect the motions of the frame, on the principle of the Graham machine?

A. I consider the Bartlett & Dodge machine of 1862 the first that I am now aware of that had this function or capability, which is possessed to some extent.

X Q. 7. Which were the next two or three acting on the same principle?

A. The Ray & Grant of 1865 and the A. B. Graham of 1867.

710 X Q. 8. Which of all these patents offered in evidence by the defendants do you consider as the nearest to Graham's of 1868—was the most complete anticipation of the inventions secured by its first and second claims or either of them?

A. The Graham of 1867 appears to me to be the most complete anticipation, so far as the first and second claims are concerned, and the Frank Bramer of 1865 I regard as almost as complete an anticipation of the first claim, if not equally so.

X Q. 9. Do you consider that the Graham patent of 1867 contains a full and clear description of the invention secured by the first and second claims of the patent sued on?

A. Yes, I do; when you read the specification in connection with the drawings.

X Q. 9. So you do not think there is the least room for doubt that this first patent fully shows and contains the invention in question?

A. No; I do not think there is any doubt of it whatever.

X Q. 10. Is there any material difference between the swivel joint M′ in the Graham patent of 1868 and the joint connecting the draft rod to the shoe in his patent of 1867?

A. I do not think there is; while they differ somewhat mechanically, I think they nevertheless afford all the motions re-

711 quired to produce the rocking and rising-and-falling motions contained in the Graham patent of 1868.

The examination was here adjourned until to-morrow morning at 10 o'clock *a. m.*

The parties met Aug. 9, 1879, pursuant to adjournment.

Present: The same as before, & the cross-examination was resumed as follows:

X Q. 11. Do you consider this Bartlett & Dodge patent of 1862 as an anticipation of the invention secured by the first & 2d claims of the Graham patent of 1868?

A. I do; to the extent that I have stated in a former answer to X Q. 6, that it had the function or capability found in Graham to some extent.

X Q. 12. Does it have that function or capability to the full extent of the Graham invention?

A. I do not consider that it has—that is to say, it is not as complete a construction by which to secure a full rocking or rolling motion as in the Graham invention, for the reason that the draft rod in Bartlett & Dodge does not admit of as great an extent of rocking or rolling or of as free a motion, neither has the rocking lever as rigid a connection with the finger bar in Dodge & Bartlett as in Graham; still the double-chain connection in Dodge & Bart-
712 lett does enable the driver to rock the bar absolutely forward & back to a certain extent.

X Q. 13. Do you consider this full-sized McCormick mower offered in evidence as fully embracing or containing the Graham invention in question?

A. I do not consider said machine as fully embracing the Graham invention in question for the same reasons that I have given for why the Graham Exhibit Comp't's Model No. 2, McCormick mower, does not contain the Graham invention as embodied in the first & 2d claims. I consider the full-sized machine exhibit to be substantially the same thing in all material respects as the Complainant's Exhibit Model No. 2. McCormick's mower, the model No. 2, shows some simplification of parts, and may perhaps be an improvement on the full-sized machines; still its motions and functions are all substantially the same, except in the respects that I have mentioned. There is one material difference between the McCormick machines and the Graham patent, and that is that the shoe in the McCormick machines, at its rear end in both machines, rests upon the ground at all times when in operation and becomes the fulcrum of the lever with which the forward side of the finger bar is raised, whereas in Graham the center of the finger bar is the fulcrum, and this is what enables the rocking of the finger bar in either direction, while in McCormick it will be seen that it is impos-
713 sible to lift the rear of the shoe or finger bar with the lever that lifts the front of it. This difference of fulcrum and lever application inevitably makes the difference between the two classes of machines that I have claimed and pointed out through all my testimony—the one class having the rocking and rolling motion as in Graham and Bramer, and the other class having merely the front rising-and-falling motion, as in Zug, Ball, and Dodge and McCormick; other exhibits in the case show these differences, but I have only cited the most conspicuous.

X Q. 14. Do you consider that the full-sized McCormick mower in question has the same rocking motion of the finger bar as the Graham machine?

A. No; I do not; but, on the other hand, I consider it has the rising-and-falling motion of Zug and Ball and Dodge and McCormick.

Redirect examination by Mr. OFFIELD:

R. D. Q. 1. In reply to cross-Q. 1 you say you were the expert for this complainant under the same patent in another case, decided by Judge Blodgett; will you please look at the model now shown you and which I now offer in evidence as marked, Sprague model No. 1,

and state whether you ever saw it before and under what circumstances.

714 A. On examining said model, I recollect having seen it in the case referred to in the question, in which case it was used to illustrate the infringing machine of the defendants.

R. D. Q. 2. Whatever testimony, then, you gave in that case was given, either directly or indirectly, in reference to the infringements or identity of mowing machines constructed like the Sprague Model Exhibit with the Graham 1868 patent?

A. Yes; such was the character of my testimony.

DAVID J. POWERS.

The examination was here adjourned until Monday morning at 9.30 o'clock.

715 AUGUST 11, 1879.

The parties met pursuant to adjournment.

Present: The same as before.

And the defendants' counsel calls Mr. WM. R. BAKER as a witness, who, being duly sworn to testify the truth, the whole truth, and nothing but the truth in said cause, deposes as follows in answer to questions by Mr. OFFIELD:

Q. 1. What is your name, age, residence, and occupation?

A. William R. Baker; age, 57; residence, Chicago, Illinois, and my occupation is that of foreman of the works of the defendants.

Q. 2. How long have you held that position and for how long have you been connected with the business of the defendants?

A. I have been connected as foreman since 1866, in the fall, and since 1857 and previous to 1866 I was connected with the sale of the defendants' reapers at St. Louis, Missouri. I sold all kinds of machines the defendants were making at that time in connection with J. D. McCormick, excepting in the years 1864 & 1865, when I knew about the machines, but was not selling any.

Q. 3. During your 22 years' experience as salesman and foreman for the defendants have you or have you not made yourself perfectly familiar with the construction and operation of the different kinds of reaping, mowing, and harvesting machinery manufactured and sold by the defendants?

A. I have made myself familiar with them.

Q. 4. Has your experience, to a more or less extent during
716 this time, made you familiar with the construction and operation of harvesting machinery other than that manufactured by the defendants? And please state briefly your experience or familiarity.

A. My experience has made me familiar with several kinds of reaping machines other than those manufactured by the defendants, having visited many fairs and attended many field trials.

Q. 5. Please state what experience, if any, in the examination of patented machinery and the letters patent relating to such machinery, and, briefly, what experience, if any, you have had in the con-

struction of harvesting machinery in accordance with the plans and specifications of letters patent, and more particularly what experience you have had in the construction of models of harvesting machinery in accordance with the plans and specifications of letters patent and without other assistance than such plans and specifications.

A. As inventor and designer and draughtsman I have had occasion to examine patented machinery and the letters patent in order to void constructing our machines so that they should contain any devices patented by others. I have made several models from drawings furnished by the Patent Office—drawings, together with the specifications, of harvesting machinery.

Q. 6. Please examine the Defendants' Exhibit Model Ball Machine and state what it represents and who made it?

A. As far as it is complete it represents the Ohio Ball machine, and I made it from certified drawings of the patent to E. Ball,
717 but not of October 18, 1859, No. 25797, but by consent of complainant's counsel I will make it conform, so far as the model goes, to the plans and specifications of that patent. This model was made from a patent to Ball that I do not see offered in evidence.

The comp't's counsel present consents to the said model being altered as suggested by the witness in his last answer above.

Q. 7. Please look at Defendants' Exhibit Graham Model, Patent of 1867, and state what it represents and who made it.

A. It represents the Graham of 1867, so far as it goes, and I made it from drawings and specifications of the Graham patent of July 23, 1867, and I consider it a correct representation of the parts shown.

Q. 8. With reference to the parts shown in this model, could or could not an ordinarily skillful mechanic construct such parts solely from the drawings and specifications of the Graham 1867 patent?

A. I think any one who understands drawings could readily construct such model, as the parts are plainly shown in the drawings. I mean the parts as represented by this model.

Q. 9. Have you examined the full-sized McCormick mower introduced in evidence in this case?

A. I have.

Q. 10. When, to your knowledge, as there shown, were machines first sold in the market in this country? I mean this full-
718 sized McCormick mower.

A. I saw them on sale in 1866, about the month of June; in the month of June, I should state.

Counsel for the complainants object to the foregoing question 10 and the answer thereto, and to any other questions or answers to or by this witness, the object of which may be to show a prior use or invention of the improvement secured by the first & 2d claims of the Graham patent No. 74342, for want of a sufficient allegation in the answer to support such evidence.

Defendants' counsel here states that, as far as he is now informed, there is to be no evidence as to prior use, except as to the building

and sale of the full-sized McCormick mower last enquired of by the defendants themselves, and that if objection is made to this he here gives notice that at the earliest date practicable he will ask leave of the court to amend the answer by setting forth the names of the witnesses who are here examined and who are conversant with such use.

719 Cross-examination by EPHRAIM BANNING:

X Q. 1. State which drawings of the Graham patent of 1867 you made this model from, marked Def'ts' Exhibit Model Graham 1867 Patent.

A. I answer that I had both of them—the one attached to the patent exhibit and the one marked Defendants' Exhibit Tracing Drawing of Patent No. 67041.

X Q. 2. Are mechanics of ordinary skill generally able to read and understand complicated drawings, such as these mentioned in your answer above or such as are usually shown in harvester patents?

A. I think that would depend on what you mean by ordinary skill. I say that a man who can read drawings at all can read these.

X Q. 3. By "mechanics or ordinary skill," in my question, I meant such mechanics as are engaged generally in the manufacture of reaping and mowing machines and who have that skill in their work usually required of manufacturers of such machines. Could mechanics thus skillful in their work read and understand the kind of drawings referred to in my question above?

A. Mechanics who are sufficiently skilled to qualify them to become foremen in shops where such machines are manufactured would be competent to read the drawings referred to. Yes;
719½ the drawings alone of the Graham they are so plain—I mean so far the parts shown in the model are concerned.

X Q. 4. Would mechanics thus skillful be generally able to read and understand such drawings as are usually shown in harvester patents so as to enable them to manufacture any particular machine shown without reference to the specifications?

A. Patent Office drawings are some times incomplete, in so far as the completed machine in connection with which they are to be used is concerned, representing only those parts designed to be covered by the patent, in which case it would be difficult to understand them without the specifications, by ordinary mechanics or any one.

X Q. 5. Does the specifications of the Graham patent of July 23, 1867, say anything whatever about a swivel-joint connection or a connection such as that shown in the Defendants' Exhibit Model Graham Patent, 1867, between the rear end of the draft rod and the shoe.

A. I don't see a description only by implication in these words: "The invention has for its object the free passage of the finger bars over the ground and the perfect moving of the former to adjust itself to the inequalities of surface over which it may pass."

X Q. 6. In your opinion, there can be no possible question that the joint connecting the draft rod to the shoe, as constructed
720 in the model last referred to, is clearly shown in the drawings of Graham's patent of July 23, 1867?

A. In my opinion it is clearly shown.

X Q. 7. You never saw machines like the full-size mower offered in evidence in this case before 1866?

A. I do not recollect that I ever did; I first saw them at St. Louis, where I was in business.

WM. R. BAKER.

721 The defendants' counsel then calls Mr. WILLIAM JOHN HANNA as a witness, who, being duly sworn to testify the truth, the whole truth, and nothing but the truth in said cause, deposes as follows in answer to questions by Mr. OFFIELD:

Q. 1. State your name, age, residence, and occupation.

A. William John Hanna; age, of full age; Chicago, Illinois; clerk for the defendants.

Q. 2. How long have you been in their employ?

A. Continuously from the year 1849 to 1874 and subsequently during the past 15 months.

Q. 3. Have you been familiar with the different styles of reaping, mowing, and harvesting machinery manufactured by the defendants during your connection with them?

A. I have been familiar——

Q. 4. Have you examined the full-sized Defendants' Exhibit McCormick Mower in evidence in this case?

A. I have examined it.

Q. 5. State when, to your knowledge, machines constructed identically like this full-sized mower exhibit were first manufactured by the defendants.

A. The first machine of the style referred to was manufactured by the defendants in the year 1865.

722 Counsel for the complainant here makes the same objection as that noted to question 10 and answer to Mr. Baker's deposition, just preceding this.

Defendants' counsel makes the same reply.

Q. 6. How many machines like this full-sized Exhibit McCormick Mower were manufactured by the defendants in 1865?

A. I can positively speak of one, because I operated it, and I think there was probably a second one.

Q. 7. Where was this machine that you operated? Give the circumstances.

A. Another party and myself worked it on the outskirts of North Chicago on a farm called the Lill farm, and not far from the present Northwestern Theological Seminary of Chicago. We took it out on the same day with one of the regular 1865 mowers, as built and sold that year, and gave both machines a thorough test to ascertain

the advantages of the newer machines. We also had a dynamometer to test the draft of each.

Q. 8. Was this an open, public trial on that farm, where any person could see it that might desire?

A. Yes; there was nothing secret about —, and one or two parties, strangers to me, were present, one of whom was operating an entirely different mower from either of our two.

Q. 9. What time of the year was this?

723 A. It must have been in the month of September, and I fix on that month because harvest was over, while it was the only month in which I had leisure to be away from the office.

Q. 10. What means have you and why do you testify as to this machine — like the full-sized machine exhibit *being* built by the defendants in the year 1865?

A. My mind and memory are clear as to the date from the fact that 1865 was the first year in which defendants built mowing machines as distinct from reaping machines. In that year they built what was called the Hubbard machine on a royalty, and also a few machines of the defendants' own construction and invention; the latter class of machine was a noted failure, and the defendants, being desirous of manufacturing a mower wholly of their own invention and construction, which would be successful in its operation, this machine as represented in the exhibit was got up and tested as a preparation for the succeeding year's manufacture. I am further confirmed in my recollection as to that date, it being the year in which one of the partners of the firm died and the year in which the rebellion was brought to an end. Our books also show that in 1868 we built none of the Hubbard machines nor any of the machines I characterise as a failure above, but did build 5,004 of the mowers similar to that marked Exhibit Full-Sized McCormick Mower.

724 Cross-examination by Mr. BANNING:

X Q. 1. When did the defendants first put these machines like the full-sized mower in question on the market, and how long did they continue to manufacture them?

A. They first put them on the market in 1866, and continued the manufacture of the same with more or less variations until 1874.

X Q. 2. As I understand you, nothing was done in reference to this machine in 1865 except to experiment with it and test its practicability; is this correct?

A. No; it is not correct, for after sufficiently testing it in the fall of 1865 its manufacture was forthwith proceeded with, the manufacturing being mainly done in the winter months.

X Q. 3. When did the defendants commence the manufacture of the machines represented by this model marked Complainant's Graham Model No. 2.

A. I am not an expert and never saw this model before. I am not aware the McCormicks ever built a machine like that.

Redirect examination:

R. D. Q. 1. In what did your experiments with that machine on the Lill farm in September, 1865, consist?

A. We cut prairie grass; we cut the greater part of one day in my presence. The difficulty that we wanted to overcome in making
725 the experiment was to get rid of the tendency in the defective McCormick machine above referred to to dip the guards and cutting apparatus into the ground. The new improved machine successfully carried the cutter bar and guards over all the undulations of the ground while cutting close and clean. We left the ground, concluding that we had just the machine we wanted, and within a few weeks thereafter the construction of the 5,004 machines was commenced.

WILLIAM J. HANNA.

726 The defendants' counsel here offers in evidence original assignment & agreement of W. B. & Cyrus A. Werden with Charles Colahan, dated Waukegan, Illinois, dated April 27, 1878, and the original assignment of Charles Colahan to C. H. & L. J. McCormick, two of the above defendants, said assignments conveying the respective interests of the assignees in letters patent numbered No. 67041, issued to A. B. Graham July 23, 1867, marked Defendants' Exhibit Assignment Colahan and Defendants' Exhibit Assignment Werden.

Complainants' counsel objects to both of the foregoing assignment exhibits as incompetent, but admits the due execution thereof by the parties therein named and states that said W. B. & Cyrus A. Werden at no time had the right, power, or authority to convey to the said Charles Colahan any right to the said letters patent owned by A. B. Graham.

727 UNITED STATES OF AMERICA, }
Northern District of Illinois, } *ss:*

I, John H. Whipple, a notary public within and for the county of Cook and State of Illinois, residing at Chicago, in said State and district, do hereby certify that the foregoing deposition of David J. Powers, William R. Baker, and William John Hanna were taken by and before me, pursuant to stipulation annexed, on the 6th, 8th, 9th, and 11th days of August, 1879, at the office of Offield & Towle, in Chicago; that each of the said witnesses was by me duly sworn to testify the truth, the whole truth, and nothing but the truth in said cause, and his deposition was by me reduced to writing by questions and answers and read over to the witness and subscribed by him as and for his deposition in said cause in my presence and in the presence of counsel for the respective parties, as appears noted on the foregoing manuscript pages. I further certify that the parties complainant and defendants were represented at the taking of the said depositions, the complainant by Mr. Ephraim Banning, of Banning & Banning, and the defendants by Mr. Chas. K. Offield, of Offield & Towle.

In testimony whereof I have hereunto set my official seal this 11th day of August, A. D. 1879.

[SEAL.] JOHN H. WHIPPLE,
Notary Public.

(Endorsed:) Filed Sept. 3, 1879. W. H. Bradley, cl'k.

728 United States Circuit Court, Northern District of Illinois.

HUGH GRAHAM *vs.* CYRUS H. MCCORMICK *et al.*

At Chicago, in said northern district of Illinois, October 8th, 1879, at the office of Offield & Towle, room 15, McCormick block, before me, John Whipple, a notary public.

Present: On behalf of the defendants, Mr. Charles K. Offield; on behalf of the complainant, Mr. Ephraim Banning.

Defendants' counsel calls Mr. WILLIAM B. WORDEN as a witness, who, being duly sworn, testifies as follows:

By Mr. OFFIELD:

Q. 1. State, if you please, your name, age, residence, and occupation.

A. My name is William B. Worden; my age is 56; residence, Waukegan, Illinois; occupation, merchant.

Q. 2. How long have you lived in Waukegan?

A. 29 years.

Q. 3. Do you know Alvero B. Graham, of Waukegan, and how long have you known him?

A. I do know him; I should say 20 years, more or less.

Q. 4. Did you ever enter into a contract with Alvero B. Graham in relation to the manufacture of mowers under a prospective or pending application for letters patent on the same?

A. Yes, sir.

729 Q. 5. What was the date of such contract, if you remember?

A. I should answer the fall of 1865.

Q. 6. Look at the contract now shown you and state if that is the contract you have just testified concerning.

A. Yes, sir; I should say it was.

Q. 7. Down to August, 1869, had you had any further or different contract with Alvero B. Graham in relation to the manufacture of his mowers than the one you have just identified?

Objected to as irrelevant and incompetent.

A. We made an agreement with him or let him a contract to build machines under and by virtue of this agreement; it was himself and another man; there was no other agreement.

Defendants' counsel offers the contract in evidence referred to in question 6 and requests the notary to identify it with the record by marking it Contract Exhibit Wm. B. Worden, it being agreed that

a copy thereof, to be made by the notary, may be attached hereto, to be used in place of the original.

Q. 8. Mr. Graham, in a deposition in this case, in reply to X Q. 119, has stated that they, referring to you and Cyrus A. Worden, did not carry out this contract and refused to carry it out; is that so or not?

A. No, sir.

Q. 9. State why there was not an actual written and recorded assignment to you of an interest in Graham's February 11th, 1868, patent, as is contemplated by the terms and provisions of this contract.

A. I don't know that I can make a definite or explicit answer of the reason why we didn't; I should say that we relied on the contract itself.

730 Q. 10. Mr. Graham, in speaking of the 1868 patent, in answer to X Q. 120, states that your refusal to build the 100 machines is the reason why he didn't assign you an interest in this patent, and that you never asked him for an assignment. Is that statement correct?

A. No, sir.

Q. 11. In the same answer Mr. Graham states: The subject was never mentioned between us; they have never to this day asked me for an assignment. Is this statement true?

A. No, sir.

Q. 12. Briefly, what are the facts in regard to the assignment of the 1868 patent?

A. I have no recollection that I know that there was one now.

Q. 13. What I mean is, the facts in regard to any attempts you ever made to get such an assignment?

A. I think in the summer of 1869 we discovered what we thought to be an intention to abandon our work or business, whichever is the best word, in order to locate the business under the patents at another location. We had a conversation—I might say conversations, there was more than one—with him in regard to the patents and he said that the patents were not assigned to us and never would be, and that our contract with him wa'n't worth a God-damned cent. I think that covers the conversation that we had—the brief of it; there were more words; that was the substance of it.

Q. 14. So far as you are concerned, is or is not the contract exhibit in full force to-day?

Objected to as not calling for a statement of fact but for a conclusion of law.

A. We think it is.

731 Q. 15. Have you ever done or committed any acts upon your part to abrogate this contract?

Same objection.

A. No, sir.

Q. 16. Did you know at the time you entered this contract, in No-

vember, 1865, of Mr. Graham's having built any mowers under his prospective patent, in 1864, with Mr. Cleveland?

A. Yes, sir; I don't want to swear to the date. I know that he built some machines with Mr. Cleveland.

Q. 17. What, if anything, did Mr. Alvero B. Graham say to you at the time you made this contract, in Nov., 1865, in relation to the successful character of the mowers which he and Mr. Cleveland had built?

A. He said he had the best machine that ever was made; that they had not been fully a success, and the reason why was that Mr. Cleveland wouldn't allow him his own way in the construction and would not furnish him money & means. That is the substance of his reasons for that failure—I mean the failure of the machines to operate well—the reason they were not fully a success.

Q. 18. What did Graham claim himself about the machines built by him & Cleveland being practical working machines?

A. He didn't claim that they were a success—that they were complete. The reason was that Mr. Cleveland wouldn't furnish them sufficiently.

Counsel for the complainant objects to any or all parts of the foregoing testimony offered for the purpose of showing that Wm. B. & Cyrus A. Worden now have or claim an interest in the patent sued on in this case.

732 Cross-examination by Mr. BANNING:

X Q. 1. You are not on friendly terms with A. B. Graham, are you?

A. For anything I know, sir, with the exception of business difficulties; no other difficulties.

X Q. 2. Is there not litigation now between you in relation to the contract of Nov. 25, 1865, offered in evidence, as well as other matters? If so, state briefly the facts regarding such litigation.

A. Mr. Graham has sued us. I have not seen his allegations and do not know what his charges or claims are.

X Q. 3. Do you not know or have you not been informed by your counsel that that litigation relates to the contracts between you and Graham referred to above?

That part of the question which refers to knowledge of the witness obtained by information is objected to as incompetent.

A. I have been informed that it related to our business relations in regard to the manufacture of mowers.

X Q. 4. Who informed you of that?

A. My counsel.

X Q. 5. Did he not also show you or read to you a copy of the bill filed by Mr. Graham in that case?

A. No, sir.

X Q. 6. Did he not tell you in effect that the bill claimed that the contract of Nov. 25, 1865, was at an end, and that neither you nor Cyrus A. Worden had any interest in any of the patents of Mr.

Graham, and prayed, among other things, that both of you might be enjoined from claiming or asserting any title to any of such patents or any interest therein?

A. I don't think he has.

X Q. 7. How long since you have been served with process in that case?

733 A. About two weeks, I should think. I wouldn't say exactly. It may be longer.

X Q. 8. Have you not given your counsel information on which to draw your answer in that case?

A. No, sir; not fully.

X Q. 9. Do you state now on your oath that you do not know what that litigation is about?

A. No, sir; I don't state any such thing. I have stated to a former question that I knew it related to our business relations about machines.

X Q. 10. Do you mean by "business relations," in your last answer, the contracts made with Graham or the other business connected with the manufacture and sale of machines?

A. I answer that I mean the business taken as a whole—the contracts & patents and the manufacture and sale of machines.

X Q. 11. Did Mr. Graham ever commence any other suit against you and Cyrus A. Worden in relation to these same matters; &, if so, when & where?

A. Yes, sir; once. I can't give the time. I would say 1870 or 1871. I think it was at Waukegan; there was no trial. I understood the papers were all burnt up in the Chicago fire.

X Q. 12. You say that in 1869 you had a conversation with Graham, in which he said that the patents were not assigned to you and never would be, and that your contract with him was not worth anything. State all that was said in that conversation or others in reference to any of the matters between you and him.

A. My answer to the question on the direct examination, I think, covers the substance of our conversations had along at these times. I don't think I could make it any more explicit than I have.

734 X Q. 13. Did you, either of you, ask Mr. Graham for an assignment under the patents sued on in this case in either of these conversations?

A. Yes, sir.

X Q. 14. Well, what did he say?

A. He said he wouldn't do it.

X Q. 15. When did you quit manufacturing these mowing machines?

A. At the time that Mr. Graham left, and we had some machines in the course of construction, and we finished them after that as well as we could. I couldn't state the time.

X Q. 16. How long since you have been engaged in the manufacture of these machines, according to the best of your recollection?

A. We have built no new ones since Mr. Graham left, but have furnished repairs and made some improvements on machines that

we had on hand when he went away. We have got stock on hand yet, I might say. We have got parts and one or two whole machines on hand now, or more than one or two.

X Q. 17. When did you sell out your shops at Waukegan?

A. I think it was the winter of 1871–1872.

X Q. 18. Have you had any shops or facility for work of that kind since that time?

A. No, sir; we hired our work done—repairing and additional pieces.

X Q. 19. Have you ever granted any shop rights or licenses, or made any settlement under any of the Graham patents; if so, when and what?

A. Yes, sir; sold one shop right to Mr. Colahan for $50.

X Q. 20. State whom Mr. Colahan said he was representing and all that was said between you and him in reference to his purchase of such shop right.

Objected to as irrelevant and incompetent.

A. He said he represented himself—wanted it for his own use; that is what he said. I told him that we couldn't sell Mr.
735 Graham's right or part. That is the substance of it. Mr. Colahan said that he carried on a little shop for experimenting in Cleveland and wanted to us- it in Cleveland.

X Q. 21. Did he ask or did you tell him how long since you had been engaged in the manufacture of machines, or anything about the contract referred to above? State fully all that was said in reference to any of these matters.

Objected to as incompetent, irrelevant, and not cross-examination, and complainant's counsel is here notified that in examining this witness upon the subject-matter embodied in the last question he by such examination makes him his own witness, and will not be permitted to contradict, explain, or deny the testimony he thus calls forth, either in this or collateral issues which may be pending in regard to the same.

A. I think I gave Mr. Colahan a brief history—a statement of our machine manufacturing. I think I showed him a copy or the original patents which I had and a copy of Graham's contract with us.

X Q. 22. Who conducted the correspondence with Graham's solicitor in reference to the proceedings in the Patent Office in obtaining the patent in suit, as well as the one issued July 23, 1867, after the making of your contract with Mr. Graham?

A. I did. It may be possible that my brother did some, but I don't think he did. I think I did it all.

X Q. 23. Did you ever see Mr. Renwick personally in reference to the applications or proceedings in the Patent Office; if so, when and how often?

A. I saw him personally about every application, I think,
736 and sometimes more than once.

X Q. 24. Did or did not Mr. Renwick, in any of these per-

sonal interviews, or otherwise, advise the withdrawal of any of the claims or parts of the invention embraced in the first application filed by Munn & Co., and the insertion of claims embracing such invention or inventions in the new or second application filed by Graham on which the patent in suit was issued?

Objected to as incompetent and irrelevant & not cross-examination.

A. I can't remember, sir.

X Q. 25. Have you now in your possession any letter or copies of letters to or from Munn & Co. or Renwick in reference to either of Graham's applications; and, if so, will you produce them and make them a part of the record in this case?

A. I decline to answer that.

W. B. WERDEN.

Defendants' counsel calls Mr. CYRUS A. WERDEN, as witness, who, being duly sworn, testified as follows in answer to questions by Mr. OFFIELD:

Q. 1. State, if you please, your name, age, residence, and occupation.

A. Cyrus A. Werden; age, 55; Waukegan, Ills.; mechanic professionally.

Q. 2. How long have you lived in Waukegan?

A. Eleven years this fall.

Q. 3. Are you the Cyrus A. Werden mentioned in this contract exhibit mentioned in this evidence?

A. Yes, sir.

Q. 4. Are you a brother to Wm. B. Werden, associated with you in that contract?

737 A. Yes, sir.

Q. 5. Do you know Alvaro B. Graham, the other party to that contract, & how long have you known him?

A. I do. I have known him 12 or 13 years since I first saw him.

Q. 6. State whether or not you and your brother have fulfilled and lived up to the terms and conditions of that contract in every respect, so far as it lay in your power, since the date of its execution down to the present day.

Objected to as incompetent & irrelevant.

A. We believe we have.

Q. 7. Do you know why Alvaro B. Graham has never formally executed to you an assignment of your certain interest in his February 11, 1868, patent, as contemplated by that contract?

A. I do not.

Q. 8. Is there any reason why he should not do so, as far as you are concerned?

A. No, sir.

Q. 9. State whether or not you and Wm. B. Werden now own an undivided interest in that February 11, 1868, patent.

(Objected to as not calling for a statement of fact, but for a conclusion of law.)

A. We do, under the terms of that contract.

Cross-examination by Mr. BANNING:

X Q. 1. Were you in partnership with Wm. B. Werden in 1869?

A. Yes, sir.

X Q. 2. Who had principal charge of the business, so far as related to the Graham mowing-machine matter?

A. My brother had.

X Q. 3. You have not manufactured any machines since 1869?

A. No new machines.

X Q. 4. As I understand, you and your brother only claim
738 an interest in the patent sued on in this case by virtue of the contract exhibit, Nov. 25, 1865?

A. That is all we rely upon—the contract; and the patent of 1868 was assigned.

C. A. WERDEN.

Examination adjourned until to-morrow morning at 10 o'clock *a. m.*

OCTOBER 9, 1879.

Parties met pursuant to adjournment.

Parties same as before.

Defendants' counsel calls Mr. RICHARD W. DOOLY as witness, who, being duly sworn, testifies as follows in answer to questions by Mr. OFFIELD:

Q. 1. State, if you please, your name, age, residence, and occupation.

A. Richard W. Dooly; age, 65, past, in August last; residence, town of Benton, Lake county; farmer.

Q. 2. How long have you lived on the same farm in the town of Benton, Lake county, Illinois?

A. I came in there the 2d day of April, 1841, and that has been my home ever since.

Q. 3. Do you know Alvaro B. Graham, formerly of Waukegan, and how long have you known him?

A. Well, I knew him since 1863 or 1864.

Q. 4. How did you happen to become acquainted with him?

A. Well, in this machine purchased of him about the date above. I don't think I knew him before that.

Q. 5. What kind of a machine was it that you bought of him; what was it to be used for?

A. Well, we called it a combined reaper and mower for the cutting of grass or grain—one or both.

Q. 6. What year or for what harvest did you buy this machine of Graham, and how do you fix any date you may give?

739 A. The best of my belief is that I bought it for the grass & grain of the season of 1863, but I wouldn't be positive.

Q. 7. How did you happen to buy this machine of Mr. Graham; what called your attention to the machine in 1863?

A. Well, they were manufactured then in Waukegan—what we called a home manufacture, and it appears to me that I came across Mr. Graham and he told me that he had used one of them the year before for his own purpose—cutting grass.

Q. 8. What price did Mr. Graham ask you, and what price did you agree to pay him for this mower you bought of him for the harvest of 1863?

A. I think $125, to the best of my recollection, when perfect; this was to be paid on the satisfactory running of the machine—that is, understand, warranted to give satisfaction.

Q. 9. Did you pay that $125 or any part of it; and, if so, when?

A. I paid either $75 or $80 for it that same fall. I couldn't be sure what time.

Q. 10. How much grass did you cut with that machine on your farm during the summer or harvest of 1863?

A. I must have cut, in grass or grain, 100 acres or over. I don't recollect exactly; the first year I bought it.

Q. 11. Did you have or use any other mower during the year 1863 for cutting your grass or grain?

A. No.

Q. 12. How did the machine run or work in 1863, as to satisfactorily or successfully cutting your grass or grain?

A. Well, we had to have a team on the road about all the time for repairs; when it kept together it done well.

Q. 13. State whether or not there was any trouble or you experienced any difficulty in the working of the machine in the harvest of 1863, so far as the movement of the sickle bar over the
740 ground was concerned, and so far as the mechanism or connections of this finger beam to the main frame was concerned?

A. The sickle bar, I think, went very well, unless the sickle breaking. I don't recollect of any; unless breaks occurred they run well.

Q. 14. What was the cause of any of the breakings of that 1863 machine?

A. One cause was the caster wheel was wrong; could get no beam to hold it, owing to the caster wheel not having the proper cast.

Q. 15. How long did you use that 1863 machine?

A. That one season—same season.

Q. 16. What machine did you use the next season—1864?

A. One got up by the same men—claimed to be an improvement on the first—got up by Graham & Porter, the men that got up the first.

Q. 17. Did you ever know of Mr. Graham and a party by the name of Cleveland getting up these machines?

A. Yes; the same, Graham & Cleveland.

Q. 18. When did they get up the machines?

A. Well, I couldn't say what time; the Porter Brothers gave it up and Cleveland took it.

Q. 19. How much grass did you cut, and grain, in the harvest of 1864, with the machine you got of Graham in 1864—the improved?

A. I couldn't answer that question, for the reason that it failed so badly I gave it up. I laid it one side at the time and bought another machine.

Q. 20. What do you mean when you say it failed badly?

A. There was so many breakages that hindered too much and I gave it up.

Q. 21. How did the machine do its work in mowing or cutting grass, when it ran without breaking or in good order, in the
741 harvest of 1864? I mean the machines you bought of Graham.

A. It done very well.

Q. 22. How much grass did you cut with that machine you bought of Graham in 1864, at any one time in 1864, without the machine breaking or getting out of order?

A. I couldn't tell you anything about it. I think very little.

Q. 23. How much grass did you cut in 1863, at any one time, without the machine breaking?

A. That I couldn't tell.

Q. 24. What machine was it you bought in 1864 other than Graham's?

A. Bought the Ball.

Q. 25. Did you use the Graham machine for cutting grass or grain any in 1864 after you bought the Ball machine?

A. I think not.

Q. 26. What is your best judgment as to the number of acres of grass or grain you cut in 1864 with the Graham machine? Approximate it.

A. I couldn't tell you. I cut but very little.

Q. 27. How did the finger beam work, in the 1864 harvest, of the Graham machine, as to passing freely over the surface of the ground?

A. I think about the same as the first; I didn't notice any difference; in fact, I forget whether there was any difference, it is so long since.

Q. 28. Was there any difficulty as to the working of any of the connections which joined the cutter bar to the main frame in that 1864 machine?

A. I don't recollect of any.

Q. 29. Whatever breaking or defect there then was in the 1864 machine was confined to some other part of the machine, as I understand you, besides the finger beam and its connections
742 to the main frame; is that right?

A. I can't understand that question. I couldn't answer you.

Q. 30. Do you recollect the finger beam and how it was connected with the main frame of the 1864 machine?

A. Yes; I think I do.

Q. 31. Well, what I wish to know is whether you had any trouble

in 1864 in the Graham machine with that finger beam or any of its connections with the main frame breaking or not working right, or whether the breaking you spoke of occurred in the cogs or gearing or some other part of the machine?

A. Well, I stated before to you that the breaking is what caused me to lay it by—bursting gear wheels in the body of the machine and breaking sickles.

Q. 32. In 1863 did any of your neighbors or acquaintances buy any mowers or machines of Mr. Graham for the harvest of that year like you bought; and, if so, who?

A. Mr. Minskey, I guess.

Q. 33. Do you know of your own knowledge whether Mr. Minskey bought and used a machine like yours of Mr. Graham in 1863?

A. I know he used one; as to his buying I know nothing about.

Q. 34. Has Mr. Graham ever talked with you in regard to your testifying for him as to that machine you bought of him upon the farm in 1863 and 1864?

A. No, sir; he hasn't.

Q. 35. Has he with any other party ever seen you and talked with you about the machines, either the one you bought of him in 1863 or in 1864?

A. Yes; he has been out there with another party looking at those things and overhauliug some of the old machinery.

Q. 36. Did you keep the machines which you bought of Mr.
743 Graham in 1863 and 1864, and have you got them in your possession now?

A. I kept them, but they are not together now.

Q. 37. When was it Mr. Graham and the other party was out to your farm looking at those old machines?

A. I should think the latter part of August or the fore part of September—I wouldn't be certain as to the time—1879.

Q. 38. Who was the other party with Mr. Graham?

A. This gentleman here (pointing to Mr. Banning).

Q. 39. Did Mr. Graham take away with him any part of this old machine when he was there, in August or September last?

A. Yes.

Q. 40. What, in your opinion, was the cause of any breakages which occurred in any part of that 1864 machine?

A. I could not state.

Cross-examination by Mr. BANNING:

X Q. 1. Where were you born, Mr. Dooly?

A. I was born in Ireland.

X Q. 2. How long have you lived in this country and how long have you been a practical farmer?

A. I have lived in this country since 1836; been a farmer about 39 years.

X Q. 3. Are you well acquainted with the practical operation of mowing machines?

A. About as well as the general run of them.

X Q. 4. How many reapers or mowers have you used in practical farming?

A. I have used those of Graham & Porter's manufacture, the Ball, the Johnson, and the Buckeye some. Graham's was the first I used on my farm, with the exception of one that I had tried before, the first of my own buying—that is, I hired them before that & worked them; have used them ever since.

744 X Q. 5. Did Graham tell you or claim to you that the second machine which you got from him, or Porter's, was better than the first, or an improvement upon it?

A. The object was to have a better one than the first. How could he tell me anything about it until I had tried it? It is natural for him to tell me it is better. I presume he has.

X Q. 6. Do you consider that that second machine was a practical machine, or successful when put into actual work in the harvest?

A. Not at all successful.

X Q. 7. Do you consider that the first machine was a successful one in the actual or ordinary work of the harvest field?

A. I think if it could keep itself together it would do very well—that is, not continually breaking and bursting.

X Q. 8. But, taken as it was, do you consider that it was successful or not?

A. How could I call it successful, as it was continually breaking?

X Q. 9. Then you consider it was not successful?

A. It would be if it could be kept together; that is what I claim.

X Q. 10. How long did you use that first machine—I mean how many weeks?

A. I used it to cut my grass and grain that season; we usually begin about the tenth of July and get through about the first of September, perhaps; it depends some on the weather.

X Q. 11. Then you probably used it about 6 or 8 weeks; is that correct?

A. Probably we did use it that long, unless some of the time it was under repairs.

X Q. 12. How often was it repaired that season, as near as you recollect?

A. I couldn't form any idea about that.

745 X Q. 13. Was it only a few times or was it very often, or what is the fact, as near as you can now remember?

A. Very often.

X Q. 14. Who repaired it?

A. Generally Graham & Porters, with myself included; I had the biggest part of the work.

X Q. 15. Was Mr. Graham out there personally to see about the matter; if so, how often?

A. Always out there when sent for, if he were not elsewhere attending to a machine.

X Q. 16. Was he there often or not in reference to repairs?

A. Yes; pretty often.

X Q. 17. Did he make many changes or repairs on that first machine or not?

A. I think repairs—a good many.

X Q. 18. How many acres will an average good machine cut in a day?

A. That entirely depends on the ground, the grass, the team, the machine, and the man that drives it.

X Q. 19. In ordinary work, how many acres do you cut now with other machines on the farm where those Graham machines were used?

A. That depends upon the ground and how early you start in the morning; probably 8 acres; you can do more if you try.

X Q. 20. Look at this model now shown you, marked Defendants' Exhibit Model Graham Patent, 1867, and state if there is any difference between the machine it represents and the first one you used, as already stated.

Objected to as incompetent, irrelevant, and not cross-examination.

746 A. It is so long since and I have forgotten those connections exactly. That is a hard question for me to answer. This connection looks all right. This connection of the draft rod to the shoe is a good deal like one of them, and I think the last one that was built, but I don't think the forward end connection of this rod is.

X Q. 21. Do you remember whether or not there was any difficulty in either of these machines occasioned by the enlarging of the hole in the rear piece of the main frame through which the piece designated K in the 1867 Graham patent was inserted or by the breaking of this piece in either of the machines you have referred to?

Objected to as incompetent, irrelevant, and not cross-examination.

A. I forget everything about it, and you are talking about the 1867 patent. No, sir; I forget; if there is any such thing I know nothing about it.

X Q. 22. Do you remember about Mr. Graham's putting a boot leg into the hole into the rear piece of the main frame referred to in my last question?

A. No, sir.

X Q. 23. Why did you get the second machine; was not the first one still in good condition?

A. No; nor the second one either—that is, I mean working condition.

X Q. 24. Why did you get the second machine?

A. They thought of making an improvement on the first and furnished the second.

X Q. 25. Did you pay for the second or was it simply in place of the first?

A. They undertook to make the improvement on the first on- that coming winter or spring, and I paid them $75 or $80 before the improvement was undertaken. That was the first fall after I bought the first.

X Q. 26. Did they promise to make those improvements
747 or furnish an improved machine before you paid the money or not?

A. The machine was warranted to be made right in every respect for both grass and grain.

X Q. 27. Is the amount named above all that you ever paid for those machines?

A. I think it was, except some for repairs when I couldn't find some of the firm there and had to go elsewhere.

X Q. 28. What time did you get the second machine spoken of?

A. Well, if the date of the first is 1863, which I am not certain about, the second is 1864.

X Q. 29. In what part of the year did you get the second?

A. Well, I suppose, about the commencement of haying—about the first of July or along there.

X Q. 30. How long had you known Porter & Brothers before getting the first machine?

A. Oh, I don't know. I have known them from boyhood. I think I got acquainted with some of them in 1841 or 1842.

X Q. 31. Did you consider them good, reliable men at the time you got that first machine?

A. Yes.

X Q. 32. So, when they said they would make the machine all right, if it was not so, you were willing to rely on their word?

A. Yes, so far as I knew; they would do the best they could.

X Q. 33. Did you get the first machine from them, or whom did you get it from?

A. I supposed I got it from Graham & Porters. I didn't know one of them more than the other. They all worked together and talked together.

X Q. 34. To which one did you pay the money mentioned
748 above, if you remember?

A. Yes; it was Ben. Porter.

X Q. 35. Did Graham say anything to you before or at the time you got either of the machines, or afterwards, while you were using them, about his having made application or his intention to make application for a patent for his improvements?

A. I think he has. I don't mean to say for his improvements, but for his machine.

X Q. 36. What did he say about getting a patent, if you remember, and how many times did he talk to you about it?

A. If my recollection serves me right, he said he had made application for a patent or should have it if he had the money for it—something to that effect.

X Q. 37. When did he tell you that, at the time you got the first machine?

A. I couldn't say what time, but it was talked of. I don't know what time.

X Q. 38. As I understand, you were to take the first machine, give it a fair trial in your harvest field, and, if it proved successful, keep it, and pay for it; is that correct?

Objected to as not representing the statement of the witness.

A. That was the intention; at least I thought so, and think so yet.

X Q. 39. If it did not prove successful you were not to pay for it, but were to have the privilege of returning it or of having them make it complete or furnish you a complete and good machine; is that correct or not?

A. Well, I supposed that to be the understanding, but there
749 wasn't so much said — it. They warranted the machine; they endeavored to do so.

X Q. 40. Did that first machine cause you any great amount of trouble or damage the season you were using it or not?

A. Well, it was that much of damage to me as anything would be that would break down when you were in a hurry, and your man. I never kept any track of it; it was more of a hindrance than a damage.

X Q. 41. How much did you pay for the Ball machine you bought at the time of laying the second Graham machine aside, as mentioned above?

—. $155.

Redirect examination:

R. D. Q. 1. That machine which you bought of Graham in 1864, and worked to some extent that year, worked well and successfully when it ran without bursting and breaking, as you have described, didn't it?

A. Yes, sir.

R. D. Q. 2. Was that machine which you bought of Graham in 1864 ever altered or changed any in its construction after you bought it?

A. I think not.

R. D. Q. 3. After the year 1864, did either you or any person in your employ use this machine which you had bought of Graham in 1864 for the purpose of cutting grass or grain upon your farm?

A. Yes.

R. D. Q. 4. Who used it, and give all the facts and circumstances concerning its use, after 1864?

A. A hired man I had; when we were out of hay to haul we fixed this up again, got it all in good order, and sent two teams to use it occasionally.

750 R. D. Q. 5. During what year did you use this machine which you got of Graham in 1864; for how many years did you thus use it occasionally after the year 1864?

A. I couldn't tell the years exactly to 1866 or 1867 or 1868; somewhere along there; I think I could tell if I were at home.

R. D. Q. 6. Did you use it for more than one year after 1864?

A. I might have used it for spells, when we were out of hay to haul, if it was in good order.

R. D. Q. 7. Why did your hired man use this machine you bought of Graham in 1864 instead of the Ball machine?

A. He thought it run lighter and cut cleaner and better, and, using two, one of us had to use that and the other the Ball.

R. D. Q. 8. After the year 1864 how many acres of grass did your hired man ever cut with the machine you bought of Graham in 1864 without the machine getting out of order or breaking or bursting, as you have described?

A. Well, I think, with very little repairs, he cut from 34 to 36 acres one year.

R. Q. D. 9. What year was that?

A. I couldn't say exactly, but it was years after I got the Ball.

R. Q. D. 10. What was your hired man's name and when did he leave you?

A. James Fearson. I could not tell when he left. He worked for me nearly 7 years; he worked this machine pretty near all it was run. I should think he worked for me from 1864 or 1865 along for 7 years, but I couldn't tell exactly. He is in that neighborhood now.

R. Q. D. 11. Did he make the few repairs necessary on the Graham machine while he cut the 36 acres?

751 A. Well, I forget whether there was much repairs or not, but what repairs there were done outside of the blacksmith shop he and I did together.

RICHARD W. DOOLY,
The Witness.

752 The defendants' counsel then calls Mr. HANSON MINSKEY as a witness, who, being duly sworn to testify the truth, the whole truth, and nothing but the truth in said cause, deposes as follows in answer to questions by Mr. OFFIELD:

Q. State, if you please, your name, age, residence, and occupation.

A. Hanson Minskey; age, 70 this month; residence, Waukegan, Illinois; no occupation at present; been farming up to this last spring.

Q. 2. Did you own a farm a number of years ago, say between 1860 & 1870, near Waukegan, Illinois?

A. Yes.

Q. Do you know Alvero B. Graham, formerly of Waukegan, Illinois, and when did you first become acquainted with him?

A. I knew Graham, but did not know what his first name was; he was present here a little while ago. It was somewhere in the neighborhood of 1864 that I first became acquainted with him, but whether it was one year earlier or one year later I couldn't say.

Q. 4. Do you know Porter Brothers, of Waukegan, Illinois?

A. Yes; they are brothers-in-law of mine.

Q. 5. Do you know and recollect when Porter Brothers and Mr. Graham first entered into the manufacture of mowers and reapers at Waukegan, Illinois?

A. I couldn't say positively.

Q. 6. What is it you can't say positively?

A. When they entered into partnership; I don't know exactly the date.

Q. 7. The first year that they were in partnership—I mean
753 Graham and the Porter Brothers—did you ever buy of them one of the reapers and mowers first manufactured by them?

A. I couldn't say whether it was the first or the second year, and I don't know when it was that they commenced, but it was amongst the first that they manufactured that I bought of them.

Q. 8. Do you know Mr. Dooley who has just given his testimony?

A. Yes, sir.

Q. 9. Did you buy your machine of Graham and Porter Brothers at the same time he bought his?

A. I do not know when he bought his.

Q. 10. How much did you pay for this machine that you bought of Graham and Porter Brothers?

A. I am not positive, but to the best of my recollection, $125.

Q. 11. Did you pay them this $125 the same year you bought the machine?

A. That I do not know; if I didn't pay it that year it was pretty quick after.

Q. 12. How many acres of grain or grass did you cut with that machine you bought of Graham & Porter Brothers the first year you bought it?

A. About 20 acres of grain and about 20 or 25 of grass, more or less.

Q. 13. Was this all the grain and grass you had on your farm to cut that year?

A. Yes.

Q. 14. Please state how that machine did its work and whether it was a perfect and satisfactorily working machine, the first year that you bought it, in grass or grain.

A. It did its work well. I can't say that it was perfection any more than I was.

Q. 15. Please state whether or not it worked successfully
754 and satisfactorily to you in cutting your grass or grain the first year you used it.

A. I was satisfied with it.

Q. 16. Who drove or operated this machine — you used it in cutting your grass and grain?

A. I did.

Q. 17. What repairs, if any, did you have to put on this machine the first year you used it?

A. I don't recollect any. Some little thing might have happened to it; if it did I mended it myself.

Q. 18. For how many years did you use this machine you bought of Porter Brothers and Graham?

A. I couldn't say as to that. I used it till the Werdens went in and bought the Porter Brothers out. I afterwards bought one of the Werdens on the same principal; the frame was changed some.

Q. 19. About how much grass and grain did you cut with that

machine in each year after you bought it of the Porter Brothers and Graham?

A. Well, for somewhere in the neighborhood of four years I cut the same quantity I have specified; after that I probably cut 10 acres of grain more and 40 acres of grass more. I bought another farm.

Q. 20. How much repairing, if any, did you make to keep that machine in good running order during the first five years you owned and run it?

A. Well, I couldn't hardly answer that question direct without putting in a specification. As to actual repairs I don't think I paid over ten dollars. What I want to specify is that there was a section changed and a beam changed that cost me about $30.

Q. 21. Who induced you to make this change and who did the work of making the change?

755 A. Well, sir, I couldn't say positive whether it was the Porter Brothers were making the machines or whether it was after the Werdens bought them out.

Q. 22. Were you satisfied with the change made in the machine, and did it make it any better?

A. No; it made it worse, and I changed it back again to the way it was when I first bought it.

Q. 23. Of what material was the finger beam made in the machine you bought of Graham & Porter Brothers when you first bought it?

A. Of wood.

Q. 24. Was or was not this machine which you bought of Graham & Porter Brothers a successful and practical working machine for cutting grass and grain during the first three or four years after you bought and used it?

A. Yes; I was satisfied with it.

Q. 25. Did it do its work as well or better or not as well as the mower in use at the time you bought it?

A. It did my work well. I can't say what other mowers did, for I didn't try any.

Q. 26. Please state, as a practical farmer, whether it makes any difference, as to the successful running of a mowing machine, who takes care of and runs the machine.

A. It makes all the difference in the world whether a man knows how to do a thing or not.

Q. 27. What kind of grass & grain fields did you run that Graham machine in for the first two or three years after you bought it—I mean as to roughness or smoothness?

A. The grain fields were smooth; my meadow was rough.

Cross-examination by Mr. BANNING:

756 X Q. 1. When did you quit sailing as a ship captain on the lakes?

A. Well, sailed a spell in 1858 and I sailed again in 1861, and then I sailed till 1864, and then parts of years for two years, spring and fall.

X Q. 2. When did you commence farming?

A. Well, I located on a farm in June, 1835, and have farmed, more or less, ever since till this spring.

X Q. 3. Did you get the machine which you have testified about before or after you quit sailing in 1864?

A. It is my impression it was the first year I quit, but I wouldn't be positive.

X Q. 4. Then, it is your impression it was 1864, is it not?

A. Yes, sir.

X Q. 5. Were you sailing on the lakes during all the summer of 1863 or not?

A. I believe I was; I am positive I was.

X Q. 6. From whom did you get that machine?

A. Well, I bought it of Porter Brothers and Graham. I suppose that was the firm. I don't remember which one I dealt with.

X Q. 7. To which one did you pay the money you have spoken of?

A. I couldn't say positive which one; to the best of my recollection, I paid it to Ben. Porter, as he kept the books.

X Q. 8. Do you remember ever having any talks with Graham personally or anything to do with him personally in reference to that machine?

A. I believe I have talked with him personally, the same as to the others; nothing in particular especially.

X Q. 9. But do you know whether you ever had anything to do with him personally about that machine or not?

A. I do not recollect.

X Q. 10. Do you remember whether anything was said at
757 the time you bought that machine about Graham having a patent or intending to get a patent on it or not?

A. I do not.

X Q. 11. Do you remember just when you paid the money for that machine and just how much you paid, or not?

A. I do not remember when it was. I remember I paid for it what they asked. That is the Porter I am speaking of. I paid Werdens for the one I got of them $110.

X Q. 12. Did you pay Porter Brothers for the machine you got of them before or after the season you got the machine?

A. It was afterwards.

X Q. 13. In what part of the year did you get that machine?

A. I am not positive, but I think it is likely I got it just about haying time.

Redirect examination.

R. D. Q. 1. What time in the year did you quit sailing on the lakes?

A. Well, I quit two or three times; once in 1858 and once in 1864. I sailed parts of seasons after that.

R. D. Q. 2. You have said once or twice in this deposition that you could not remember dates. Are you at all certain in your own mind that you sailed on the lakes in the summer of 1863; and, if so, what means have you of fixing that year, and might it not have been in 1862 instead of 1863?

Objected to as leading and incompetent.

A. Well, the reason I remember that was I bought a schooner in 1861, and I bought her on three years' credit, and I sailed her till she was paid for, and then I let my son take her part of the time and part of the time I went with him.

R. D. Q. 3. Was you at home, so as to work on the farm, during any of the summer while you were sailing the schooner?

A. Not during the first three years; after that I was at home part of the time.

758 R. D. Q. 4. Are you certain you bought that schooner in 1861; might it not have been 1859 or 1860?

A. I am positive it was 1861.

R. D. Q. 5. You said in the first part of your testimony, as I understood you, that you bought the machine of Graham and Porter Brothers in 1863 or 1864; do you wish to change that now and say you bought the machine in 1864?

A. I said it was in 1864, I thought, but that it might have been a year before or a year later.

R. D. Q. 6. Had Porter Brothers & Graham ever built any other machines or been in business together before the year you bought your mower of them?

A. I don't exactly know when they went into business together, but my machine was among the first they sold. I don't know whether it was a year after. I don't know how long it took them to make the machines.

R. D. Q. 7. Do you recollect whether or not you used that machine you bought of Graham in war times or during the war?

A. I couldn't say whether it was 1864 or 1865.

R. D. Q. 8. Have you any written contract about it?

A. No, sir.

R. D. Q. 9. Are you certain you did not buy the machine when you were sailing?

A. Yes.

R. D. Q. 10. Did you know Mr. Cleveland, of Waukegan?

A. I know one Mr. Cleveland.

R. D. Q. 11. Did you know a Mr. Cleveland who was in partnership with Mr. Graham in the building of mowers substantially like the one you bought?

A. I do not.

R. D. Q 12. Do you know of Mr. Graham being in partnership with the Porter Brothers in the manufacture of machines before the year you bought yours?

759 A. I knew they were in partnership with him before I bought mine, but how long I don't know.

R. D. Q. 13. Had Porter Brothers had anything to do with the manufacture of reapers and mowers the year before you bought yours?

A. I said in answer to the last question that I didn't know how long.

R. D. Q. 14. Do you mean to say that you did not know what

business your brothers-in-law were in at Waukegan during the two years prior to the year you bought your mower of them?

A. No; I don't mean to say any such thing; they were carpenters and joiners; but whether it was the spring before, or the fall before, or the year before I bought my machine that they went into partnership with Graham, I do not know.

R. D. Q. 15. But the year that you bought your machine of them is the first year you know anything about their manufacturing machines, is it?

A. I answered that question two or three times, that they were manufacturing machines at the time I bought, but how long before I don't know.

R. D. Q. 16. How many years after you bought your machine of Graham & Porter Brothers was it before the Porter Brothers sold out to Werdens?

A. I do not know.

R. D. Q. 17. Haven't you any recollection whether it was two, three, four, or five years?

A. Well, as near as I could speak, it was in the neighborhood of three or four years, or may be five.

R. D. Q. 18. It was several years, was it not, when Porter Brothers sold out to Werdens after you bought your machine of Graham & Porter Brothers?

A. Yes; it was several years.

760 R. D. Q. 19. The machine which you bought of Graham & Porter Brothers was a brand new machine, and had just been made, had it not?

A. Yes.

R. D. Q. 20. The machine you bought had not been altered or changed over in any respect at the time you bought it, had it?

A. Not that I know of.

Recross:

R. X Q. 1. As I understand you, you are not certain what year it was that you bought your machine spoken of?

A. No; I am not certain what year it was.

R. X Q. 2. It may have been in 1865, may it not?

A. It may have been in 1865 or in 1864; that is all I have to say.

R. X Q. 3. How close was your farm to that of Mr. Dooly, who has testified here to day?

A. About 3 miles.

Counsel for both parties here admit and stipulate that the foregoing deposition of Hanson Minskey may be considered and taken as an unqualified sworn statement that Mr. Minskey first received and used the machine therein referred to in his above and foregoing testimony in the harvest season of 1864, but this admission shall have no other effect than merely to make the time of his first receiving and using such machine certain.

761 The def'ts' counsel then calls Mr. GEORGE K. STEARNS, who, being duly sworn, deposes as follows:

Q. State, if you please, your name, age, residence, & occupation.

George K. Stearns; age, 51 years; residence, town of Warren, Lake county, Ills.; farmer.

Q. 2. Did you ever buy a mower and reaping machine from Alvaro B. Graham and Mr. Cleveland, at Waukegan, Illinois?

A. I did.

Q. 3. What year?

A. I think it was in 1864; it was when Graham and Cleveland were building machines at Waukegan.

Q. 4. What was your business then?

A. Farming.

Q. 5. What did you pay for this machine?

A. I think it was $160, but wouldn't say positive.

Q. 6. When did you pay for it?

A. When I took the machine from the shop.

Q. 7. Where did you take the machine?

A. I took it to my farm, in the town of Warren.

Q. 8. How much grass did you cut with that machine during the summer of 1864?

A. I should think probably about 20 acres.

Q. 9. Was or was not that a practical and successful machine in cutting and mowing light grass?

A. It cut the grass well, as far as that part was concerned.

Q. 10. State whether or not that part of the machine comprising the finger beam or cutter bar and its connections to the main frame, both forward and back, together with its lever attachment for operating the same, worked successfully and practically upon that
762 machine in the field, in the grain and grass harvest of 1864.

A. I didn't test it in the grain, but in the grass it was a good feature in the machine—good features——

Q. 11. What do you mean by these parts of the machine being good features in the grass?

A. It gave the control of the finger beam to the operator of the machine and made them to lower or raise and cut the grass high or low, as he saw fit.

Q. 12. Please state whether these features and parts of that 1864 machine I have just mentioned worked well and operated successfully and practically in that machine, in 1864, while operated in grass by you.

A. They did.

Cross-examination:

X Q. 1. Do you mean to be understood as saying that that machine was a good and practical one in actual work, such as the work of ordinary harvest fields?

A. Not as a whole.

X. Q. 2. What was the matter with the machine?

A. It was too heavy and cumbersome; some of the gearing was too light; the pitman rod gave out twice, I think, and I think that the dog connecting the drive wheel to the axle broke or gave way; the connection of the pole to the frame was by a loose joint, and it

allowed the frame to vibrate up and down, and it made it difficult to manage sometimes. The bar that run out with the caster wheel behind the main frame made it unwieldly and hard to manage—hard for the horses to manage. That is about all.

X Q. 3. Then, taken as a whole, you do not consider that it was a practical or successful machine, do you?

A. Not taken as a whole; I do not.

X Q. 4. What became of that machine?

763 A. I took it back to Mr. Cleveland that same summer.

X Q. 5. What did you take it back for?

A. Because I couldn't run it successfully.

X Q. 6. How long did you keep it?

A. Not to exceed three or four weeks.

X Q. 7. How long did you run it in cutting grass?

A. I stated before that I thought I cut about 20 acres.

X Q. 8. How long did it take you to cut those 20 acres?

A. I cut parts of days at a time and I couldn't state the exact time that it did take.

X Q. 9. Why did you cut only parts of days at a time?

A. I generally cut in the forenoon and hauled it in in the afternoon.

X Q. 10. Was there much breaking in the machine during the time you used it?

A. The main spur wheel broke once, and we replaced it; the pitman broke twice, and there was one dog that gave motion to one of the drive wheels that broke.

X Q. 11. Was there any breaking or anything wrong in the joint connecting the rear end of the vibratable link to the main frame while you were using the machine?

A. I don't recollect of any; I think not.

X Q. 12. Did you give the machine back to Mr. Cleveland or make a present of it to him?

A. I did not.

X Q. 13. Did he pay you back the money you paid for it?

A. All excepting $20.

X Q. 14. Then you took the machine under an agreement with Mr. Cleveland that if it did not prove successful you were to have the privilege of returning it, and in that case was to have your money back, did you not?

A. That was the written agreement that Mr. Cleveland gave me; he warranted it.

764 X Q. 15. And it was because the machine did not prove successful that you returned it, was it not?

A. Yes, sir; excepting those points that I have excepted before.

X Q. 16. You bought that machine from Mr. Cleveland personally, and not from Mr. Graham, as I understand you?

A. I bought it from Mr. Cleveland.

X Q. 17. Was Mr. Graham present when you made the arrangement with Mr. Cleveland or paid him the money?

A. It is so long that I couldn't state positive, but I think he was

around some of the time, but whether at that immediate time or not I couldn't state.

X Q. 18. Did Mr. Cleveland or Mr. Graham inform you that a patent had been obtained or applied for covering that machine, or say anything about a patent on it?

A. I couldn't say that they did; my impression is now that some one said or it was printed on the machine, patent applied for, but I couldn't say positive.

X Q. 19. Did Mr. Graham go out personally to your farm to attend to the putting up or starting that machine or not?

A. I think that I took the machine out to the farm all put together but the attaching of the cutter bar, and I put that on myself, and when I sent for Mr. Cleveland to come out and see about the machine Mr. Graham came with him. This was within a few days after I tried the machine. They might have been there a half a day. I don't recollect whether Graham was out there more than that one time or not; they tested it in wild grass while he was there, and that is the time the spur wheel broke. I think it cut the grass well, so far as the operation of the knives went, but as a whole it wasn't a good combination.

X Q. 20. Were the 30 acres over which you speak of cutting rough or smooth ground?

765 A. Most of it was smooth ground; part of it was some rough.

X Q. 21. In what month did you get that machine?

A. In July, I think.

X Q. 22. Why was the whole amount of the purchase-money not paid back to you when the machine was returned?

A. I don't know. I tried to get it back from Cleveland, and he hung to it. According to the warranty I was entitled to it all.

Redirect:

R. D. Q. 1. Cleveland claimed the machine was all right, didn't he?

A. I suppose he thought it was near enough right to entitle him to keep the money.

R. D. Q. 2. What, if anything, has Mr. Graham said to you in the line of preventing you from giving any testimony in this case and in regard to the character and working of that machine on your farm in 1864?

A. Well, he told me if McCormick sent any agent up there to kind of play off and say that the machine wasn't worth a damn.

R. D. Q. 3. When was that?

A. I think it was in the latter part of August, 1879.

R. D. Q. 4. Isn't it a fact, Mr. Stearns, that the breaking of these different parts you have mentioned—the pitman, cog-wheel, dog, &c.—in reply to a cross-question of Mr. Banning was caused or produced on account of defective material used in their respective parts or on account of unworkman-like making in producing these parts and not on account of the principle and methods of construction of the machine?

A. I should say that it was on account of the manufacture and not the principle.

766 R. D. Q. 5. Would there have been any trouble in working that machine successfully or practically in an ordinarily level field in ordinarily light grass? I do not mean to enquire if it would cut grass as well as an ordinary mower of that day, but I mean to enquire if, under the circumstances mentioned, it would not have cut the grass practically and successfully if the parts you have mentioned had held together instead of breaking.

A. It would have cut the grass, but I don't mean to change what I have said as to the machine generally as a whole.

Recross-examination:

R. X Q. 1. You always considered that that machine, taken as a whole, was a failure, did you not?

A. Taken as a whole combination, I did.

R. X Q. 2. Did you not tell Graham so in the conversation, to which you have referred, had between you and Graham the latter part of last August?

A. I think it is my impression that I did to the machine taken as a whole.

R. X Q. 3. And then he asked you to say the same to McCormicks if they made enquiries?

A. I think he did when he said to play off.

R. X Q. 4. What reason did he give, if any, for asking you to tell them that the machine was a failure?

A. One reason was that he said the law gave him one year for trying the machine before he was obliged to take out his patent. That was the main reason he gave.

GEO. K. STEARNS.

767 Further taking of testimony was here adjourned by consent until the 16th day of October, 1879, at 9 o'clock a. m.

OCTOBER 16TH, 1879.

The parties met pursuant to adjournment.

Present: The same as before.

And defendants' counsel thereupon calls Mr. MERRITT GREEN, Jr., as a witness, who, being duly sworn, deposes as follows in answer to questions by Mr. OFFIELD:

Q. 1. State, if you please, your name, age, residence, & occupation.

A. Merritt Green, Jr.; age, 37; Marshalltown, Iowa; interested in the manufacture of barbed wire.

Q. 2. Have you ever had any knowledge and experience in the sale of harvesting machinery to farmers and users? Give your answer in reference to reapers and mowers combined or separate, and state briefly what that knowledge and experience has been.

A. I have had experience in the use and sale of harvesting machines from 1862 down to the present time.

Q. 3. During that time have you been familiar with the contracts

and covenants of the same in relation to the manner of sale as to warranty of machinery sold?

A. I have.

Q. 4. What has been the custom during the period last mentioned by you with the different manufacturers of harvesters throughout the United States as to covenants of warranty in the sale of their machines—reapers & mowers?

A. To give a warranty that said machine would do good work with proper care. Failing to do this the agent is to be notified, and, if he fails to make it do good work, the machine is to be returned and money or notes refunded. That is the substance of all warranties. They all vary a little in their wording.

768 Q. 5. Please mention the names of some of the principal machines you are familiar with whose manufacturers or their agents have given this covenant of warranty in the sale of their respective machines.

A. The John H. Manney reaper, the John P. Manney reaper, Kirby, Woods, McCormick, the Buckeye, the Ohio Champion, the Marsh harvester, the Ellwood harvester, the old New York, now called the Triumph, the Esterly, that used to be used considerable, and others.

Q. 6. Was this covenant of warranty verbal or in writing?

A. It was printed.

Q. 7. From your knowledge and experience in the sale of these different harvesting machines to farmers and users and the contracts in relation thereto, would it have been possible for a manufacturer at any time since 1862 to have sold a reaper or a mower to a farmer without having given him substantially this covenant of warranty and agreement to receive back the machine upon its failure and a return of the money if it did not work?

A. My opinion is that it would be very difficult.

Q. 8. Please look at this paper now shown you and state if you recognize it as substantially the covenant you have described.

A. It is.

Q. 9. Do you recognize whose contract this is, referred to in your last answer?

A. Yes, sir; McCormick's.

The paper is offered in evidence by def'ts' counsel and marked Exhibit Contract Greene, Jr.

Cross-examination by THOMAS A. BANNING:

769 X Q. 1. During your experience did you ever sell a machine of any kind which proved unsuccessful in the actual work of the harvest field and which was returned to you and the money refunded to the farmer?

A. Several. They were returned to my agents.

X Q. 2. In such a case, where the machines had been returned which you had put out and the money and notes returned to the farmer, did you consider after it had been returned that you had sold the machine?

A. Do you mean that the sale had been consum-ated at one time?

X Q. 3. Did you consider it a sale of that particular machine?

A. Yes.

X Q. 4. Did you include that particular transaction in your report to the parties whose machines you were selling as a case where a sale had been made?

A. Yes, sir.

X Q. 5. Did you still retain or have in your possession that particular machine and sell it afterwards to somebody else?

A. I am unable to state whether the returned machines were sold again or shipped back to the shop; probably both have occurred.

X Q. 6. During your experience did you ever put out a machine which was returned to you where, instead of returning the money or notes, you furnished the farmer another machine?

A. It is quite probable such cases have occurred.

X Q. 7. In such a case which one of these two machines did you consider that you had actually sold?

A. Both.

X Q. 8. In making your report to the parties whose machines you were selling did you charge yourself with or pay over the price of one or two machines?

A. I never kept any such account. I was employed upon a salary and simply made a report of the business done.

770 X Q. 9. Did you ever actually pay over to your employers in such a case the price of both machines? Please answer the question yes or no.

A. No, sir.

X Q. 10. In such a case was the money paid over for the first or second machine?

A. Sometimes one and in some cases the other. It should have been for the last machine. Where money was paid we could not distinguish. Where notes were given they were usually changed to the last machine by putting in its number.

X Q. 11. Please state where you have been engaged in selling reaping and mowing machines?

A. West of the Mississippi river, western part of Illinois, and the western part of Wisconsin.

X Q. 12. What do you understand or mean by the words "actual sale," as already used?

A. Terms of sale agreed upon on possession given of the property.

X Q. 12. What was the price of good standard reaping and mowing machines during the years 1863, 1864, & 1865?

A. My recollection of it is from $140 to $225.

X Q. 14. State when you began selling reaping and mowing machines and when you became familiar with the manner in which they were sold.

A. In 1868. I became familiar with the manner in which reaping machines were sold first in the years 1862 and 1863.

Redirect examination:

R. D. Q. 1. Did you ever know of a manufacturer or an agent of a manufacturer receiving back one of their respective machines when they had warranted it, as you have described, from a farmer after that farmer had cut his grass with the machine, or after he had cut anywhere from 20 to 100 acres of grass or grain with
771 the machine, and refunding the money and notes or any part of the price paid?

A. No, sir.

MERRITT GREENE, JR.

772 CONTRACT EXHIBIT W. B. WERDEN.

[5. A. B. G. W. B. W. C. A. W. 5.]

[5. A. B. G. W. B. W. C. A. W. 5.]

This indenture, made and entered into this twenty-fifth day of November, A. D. 1865, between Alvaro B. Graham, of the county of Lake and State of Illinois, party of the first part, and William B. Worden, of county and State aforesaid, and Cyrus A. Worden, of the county of Berkshire and State of Massachusetts, party of the second part, witnesseth:

That whereas the said party of the first part has invented a combined reaping and mowing machine, known and called the "Champion machine," for which invention an application is about to be made to the Patent Office, at Washington, D. C., for letters patent; and whereas the said party of the first part is desirous that the party of the second part shall engage in the manufacture of said machines:

Now, therefore, the party of the first part hereby covenants and agrees to and with the party of the second part that the party of the second part shall and may have the exclusive right to manufacture and sell said machines according to the present model and with improvements thereon and thereto as the party of the first part may become hereafter the inventor of and entitled by law to letters patent therefor prior to the termination of this contract, which said right shall continue and be in force from the date hereof till the patent about to be applied for as aforesaid shall become of no effect by lapse of time: Provided, however, That in case any patent may be obtained for said machine or for any improvements thereon or thereto by the said party of the first part territorial or shop rights to use the same may be sold and granted by the parties hereto as is hereinafter provided.

And the said party of the first part further covenants and agrees to and with the said party of the second part that he will protect
773 and save harmless the said party of the second part against any and every claim which any party or parties may make in and to the right of manufacture and sale of said machines by reason of any agreement or contract made with the said party of the first part prior to the making and delivery of these presents.

And the said party of the first part further covenants and agrees to and with the said party of the second part that before letters

patent shall be issued for said invention he will make such necessary and proper assignment thereof to said party of the second part that said patent may and shall issue to the parties hereto jointly, giving to them an equal undivided one-third interest therein, and in case the said party of the first part shall hereafter invent any improvements upon the present model which may be patented he shall, before obtaining letters patent therefor, make such necessary and proper assignment there*for* to the said party of the second part that the patent therefor may and shall issue to said parties hereto jointly as aforesaid, and that the party of the second part shall have the right to use said subsequent invention in and about the manufacture and sale of said machine during the time this contract shall be in force exclusively: Provided, That the party of the second part shall have no interest in any invention of the said party of the first part after this contract shall cease to be in force by any reason whatever.

And the party of the first part further covenants and agrees to and with the party of the second part that he will work for the party of the second part in and about the manufacture of said machines and the repairing (if required) of the same by the second party, paying therefor such wages as is received at the time by first-class mechanics in this city, so long as the party of the second
774 part may desire his services in the business of said manufacturing and repairing, and that he will devote his time entirely to said business.

And in consideration of the covenants and agreements of the said party of the first part the said party of the second part covenants and agrees to and with the party of the first part that they will manufacture for sale and sell the same, if they can, fifty of said machines the coming season, the said second party being at the whole of the expense of manufacturing & selling the same, and the profits arising from the sale of said machines, after deducting all expenses and losses (if any), to be equally divided between said individuals interested in said profits—that is to say, each receiving one-third of said profits; and the said party of the second part further covenants and agrees to and with the said party of the first part that they will manufacture for the season of 1867 and each succeeding year one hundred machines before mentioned upon the same condition before mentioned, and the profits arising therefrom to be divided in like manner, and if the business should warrant and the second party so agree to build an excess of over one hundred of said machines in any one year, then and in that event the said party of the first part is to pay to said party of the second part eight per cent. interest annually on one-third of all such capital as shall be necessary and used by said party of the second part in the business aforesaid in manufacturing said excess and selling and repairing done in said business on said excess.

And it is mutually agreed between the respective parties that no sale of any part or right of said invention shall be made by either party without the written consent of all the others, and when
775 any sales are made the profits arising therefrom shall be divided as before mentioned, as in case of any other profits.

And it is further covenanted and agreed between the respective parties that the said business of manufacturing, repairing, and selling said machines as aforesaid may at any time hereafter be discontinued by a majority of the individuals to these covenants by giving ninety days' notice to the other of their intention to do so, provided the said party of the second part shall, before the time of discontinuance, assign to said party of the first part, in due form of law, any & all right, title, and interest which the said party of the second part may at the time have in and to said invention for said machines and any improvement thereon and thereto made by said party of the first part and coming within the terms of this contract by virtue of any patent or patents or otherwise.

And the said party of the second part further covenants and agrees to and with the said party of the first part that they will pay to the said party of the first part one-third of the net profits realized from the said business of manufacturing, repairing, and selling said machines over and above the actual cost of manufacturing, repairing, and selling the same and losses sustained and suffered of any and all kinds whatever and over and above all actual and necessary expenses incurred in relation thereto, and that upon the first day of January of each and every year or immediately thereafter a complete settlement of the business shall be had and determined.

And it is further agreed and understood between the respective parties that in case a patent is not obtained for said machine
776 this agreement is to be void and of no effect, and it is also further covenanted and agreed between the respective parties that for all the time in which the said party of the second part shall be actually & necessarily engaged manufacturing or selling any of said machines the same compensation shall be paid to said party of the second part as is paid to the party of the first part for services so rendered; said amount to be paid out of the receipts.

And it is further covenanted and agreed between the respective parties that the covenants and agreements herein contained shall extend to and be obligatory upon the heirs, executors, administrators, or assigns of the respective parties hereto.

Witness our hands and seals the day and year first above written.

A. B. GRAHAM. [SEAL.]
W. B. WERDON. [SEAL.]
C. A. WERDON. [SEAL.]

Signed, sealed, and delivered in presence of—
J. E. CLARKSON.

(Endorsed:) Filed Jan'y 14, 1880. W. H. Bradley, clerk.

777 *Complainants' Rebuttal.*

United States Circuit Court, Northern District of Illinois.

ALVARO B. GRAHAM *et al. against* C. H. MCCORMICK.

ROCHESTER, N. Y., *Nov.* 27, 1883.

Met pursuant to agreement.

CHARLES DEWEY, a witness called on behalf of complainants, in rebuttal, being first duly sworn, testified as follows in answer to interrogatories propounded by Mr. BANNING:

Q. You have been examined as a witness on the part of defendants in this cause, have you not?

A. Yes, sir.

Q. State fully what was said between you and Mr. Graham, particularly what statements were made by you to him at the time of the negotiations of this settlement referred to in your other deposition in reference to machines manufactured by the Johnston Harvester Company before 1874.

A. We contended that the machines made up to about that time were to a large extent experimental machines; that the busi-
778 ness of 1874, 1875, and 1876 had proved that there was no money in them for the company, and that those machines, even if we arrived at a basis of settlement per machine, ought not to be taken into account in making the settlement, as we did not think the company had made any money in manufacturing them, and that they were changed each year from 1871 up. As far as the combined machines were concerned, there were as many of them or more than the mowers. The mowers did very well. We gave Graham to understand that the mowers were all right, but the combined machines were, to a certain extent, experimental each year right along; that they had proved a loss rather than a benefit to the company. They did not get the machines in proper shape until the season of 1873 and 1874, so that they stood well, and the farmers would be satisfied to pay for them, and we rather begged off on that account for the first year on those combined machines.

Q. Those facts were stated to Mr. Graham as a reason
779 for his accepting a low figure in the settlement, were they not?

A. As an inducement to him if possible to let up on the number of the machines, to the extent of those experimental machines at least.

Q. And did they form part of the negotiations or statements made at the time of the negotiations for that settlement?

A. They formed a part of the statements. I don't know that they had any bearing with Mr. Graham.

Q. Did you remember when and where you met Mr. Graham and had the interviews with him in reference to the settlement? If so, please state.

A. At your office, I think.

Cross-examination by Mr. HARDING:

X Q. When did you first go to the Johnston Harvester Company?
A. I think it was about the 20th of March, 1874.

By Mr. BENNETT:

X Q. Had you any connection with the Johnston Harvester Company or its business prior to that time?
A. Not directly.

Signature waived by consent of counsel for respective parties.

780 PROVIDENCE, R. I., *Nov.* 30, 1883.

ISAAC N. WOOD, a witness called on behalf of complainants, in rebuttal, being first duly sworn, in answer to interrogatories propounded by Mr. BANNING, testified as follows:

1 Q. What is your name, age, residence, and occupation?
A. I. N. Wood; age, 53; residence, Providence, R. I.; and am a machinist.
2 Q. State whether you were connected with the Sprague Mowing Machine Co.; and, if so, when and in what capacity.
A. I have been connected with them since April, 1870, as superintendent.
3 Q. What did you have to do, if anything, with the building of the Sherwood mowers manufactured by them?
A. We had nothing to do with the Sherwood; we simply remodeled the Sherwood mower and called it the Sprague.
4 Q. How many kinds of mowers did the Sprague Co. ever manufacture?
A. They manufactured but the one class.
5 Q. Were all the mowers manufactured by you of the same construction and manner of operation, particularly as to the
781 finger bar and its connection to the frame?
A. No, sir.
6 Q. State what differences there were between them as to the different kinds.
A. There was a stationary bar and the tilter bar.
7 Q. What do you mean by these terms, "stationary bar" and "tilter bar?"
A. I mean, as to the "tilter bar," you could elevate the points of the guards up and down, and with the "stationary bar" the panels would not be elevated.
8 Q. Then, I am to understand you that the one class was so constructed that the finger bar could be rocked or tilted, and the other class so constructed that the finger bar could not be rocked or tilted?
A. Yes.
9 Q. How large a proportion of all the mowers manufactured by the Sprague Manufacturing Co. had the finger bar so constructed that it could be rocked or tilted?
A. Oh, perhaps $\frac{1}{12}$; but there is nothing accurate about that.

10 Q. Do you know where all the mowers with the tilting bar were sold or shipped?

A. They were sold to Gammon & Deering, of Chicago, I
782 think, and to dealers and agents in St. Louis.

Cross-examination by Mr. BENNET:

11 X Q. Do you know of your own knowledge what proportion of the machines had the tilting feature and what proportion had not?

A. No; not exactly; perhaps $\frac{1}{12}$ of them had the tilting feature, and we built about 12 or 13,000 machines.

12 X Q. Then your judgment would be that you built and sold fully 1,000 machines that had the "tilter" feature?

A. Yes.

13 X Q. Do you think you built as many as 2,000 with the "tilter?"

A. No, sir.

14 X Q. Do you know positively whether any of those machines having the tilter feature were shipped to points other than Chicago and St. Louis?

A. I do not.

Signature waived.

Complainants' counsel offers in evidence letter from B. F. Thurston to E. Banning, dated Feb'y 1, 1878, as follows:

"PROVIDENCE, R. I., *Feb.* 1, 1878.

"Ephraim Banning, Esq.

783 "MY DEAR SIR: Your note, left on my desk last November, ought to have received an answer before this, but a great number of circumstances have prevented me from doing as I wished, and not among the least of these has been the present embarrassed condition of all the Sprague affairs and the suits of creditors.

I have, finally, the authority to offer you, in full settlement of the suit of Graham against Gammin and Deering, the sum of 1,500 dollars.

This payment to include a license to put together and sell the parts of the machines that the company now have on hand. The company are not manufacturing any new machines, but simply putting together, now and then, some parts of machines that they have on hand.

This is the best offer I am able to make for a full discharge against the company and the defendants and the purchasers of the machines.

Very truly yours, B. F. THURSTON,
For SPRAGUE M'F'G CO.

784 Also letter from B. F. Thurston to Banning & Banning, dated March 26, 1878, as follows:

PROVIDENCE, R. I., *March 26th*, 1878.

Messrs. Banning & Banning.

DEAR SIRS: You favor of the 13th inst. at hand. The total number of machines made and sold by the Sprague Co. will not exceed nine thousand, and of these Gammon and Deering have not sold, as I am informed, more than one thousand.

I have not seen the evidence taken on the accounting, but am surprised that it would warrant a decree for $13,000, in view of the fact that the licenses under the "Pool" patents, while they were in force, did not exceed $10.00 per machine.

It will be impossible for Mr. Cook, in view of the insolvency of the company, to make any materially larger offer than he has done. It is very probable, in view of the movement of creditors on the Sprague property, that very shortly it will be impossible, in
785 case the company goes into bankruptcy, to make any settlement whatever. I think, however, that if Mr. Graham would give a full discharge Mr. Cook would be willing to pay if the arrangement could be immediately carried out—two thousand dollars ($2,000), which would include the costs.

I am yours truly, BENJ. F. THURSTON.

Also letter from B. F. Thurston to Banning & Banning, dated April 23, 1878, as follows:

PROVIDENCE, R. I., *April* 23, 1878.

Banning & Banning.

GENTLEMEN: Your favor of the 18th is received. I showed your previous letters to Mr. Cook and he wrote some days ago to Gammon and Deering, and I was under the impression that Gammon and Deering would communicate with you.

The best thing, as I understand from him, that he can undertake to do, in view of the present situation of the company and the claims of creditors against it, is to offer twenty-five hundred dollars ($2,500) for a full release of all claims under the Graham
786 patent against the Sprague Mower Co. and its venders.

I regret that he is unable to do more.

Very truly yours,

B. F. THURSTON,
Per J. K.

DEFENDANTS' COUNSEL: It is admitted the three foregoing letters offered in evidence were written as stated and are the original letters.

Defendants' counsel objects to the offering in evidence of the foregoing letters as incompetent and immaterial.

Adjourned subject to notice.

Endorsed: Rec'd, filed, and opened for Mr. Banning Dec. 20th, 1883. Wm. H. Bradley, cl'k.

787

DEPARTMENT OF THE INTERIOR,
UNITED STATES PATENT OFFICE.

To all persons to whom these presents shall come, Greeting:

This is to certify that the annexed is a true copy from the records of this office of the letters patent granted Jonathan Haines September 4th, 1855, #13523, for "improvement in grass harvesters."

In testimony whereof I, H. E. Paine, Commissioner of Patents, have caused the seal of the Patent Office to be hereto affixed this twenty-sixth day of August, in the year of our Lord one thousand eight hundred and seventy-nine, and of the Independence of the United States the one hundred and fourth.

[SEAL.]

H. E. PAINE,
Commissioner.

No. 13523.

United States of America to all to whom these letters patent shall come:

Whereas Jonathan Haines, of Pekin, Ill., has alleged that he has invented a new and useful improvement in grass harvesters,
788 which he states has not been known or used before his application; has made oath that he is a citizen of the United States; that he does verily believe that he is the original and first inventor or discoverer of said improvement, and that the same hath not, to the best of his knowledge and belief, been previously known or used; has paid into the Treasury of the United States the sum of thirty dollars and presented a petition to the Commissioner of Patents signifying a desire of obtaining an exclusive property in the said improvement and praying that a patent may be granted for that purpose, these are, therefore, to grant, according to law, to the said Jonathan Haines, his heirs, administrators, or assigns, for the term of fourteen years from the fourth day of September, one thousand eight hundred and fifty-five, the full and exclusive right and liberty of making, constructing, using, and vending to others to be used the said improvement, a description whereof is given in the words of the said Haines in the schedule hereto annexed and is made part of these presents.

In testimony whereof I have caused these letters to be made patent and the seal of the Patent Office has been hereunto affixed. Given under my hand, at the city of Washington, this fourth day of September, in the year of our Lord, one thousand eight hundred and fifty-five, and of the Independence of the United States of America the eightieth.

[SEAL.]

ROBERT McCLELLAND,
Secretary of the Interior.

Countersigned and sealed with the seal of the Patent Office.

S. T. SHUGERT,
Act'g Commissioner of Patents.

789 *The Schedule Referred to in These Letters Patent and Making Part of the Same.*

To all whom it may concern:

Be it known that I, Jonathan Haines, of Pekin, in the county of Tazewell and State of Illinois, have invented certain new and useful improvements in mowing machines; and I do hereby declare the following to be a full, clear, and exact description of the same, reference being had to the accompanying drawings, making a part thereof, in which—

Figure 1 represents a perspective view of the machine. Fig. 2 represents a top plan or "bird's-eye" view.

Similar letters in both the figures refer to like parts.

The nature of my invention relates, first, to the mode of hanging the cutter-bar to the main frame, so as to allow it (the cutter-bar) to follow all the undulations of the ground regardless of the rising or falling of the frame, but so as always to preserve its parallelism with regard to the frame; also in the combination, with a harvesting-machine, of an instantaneous and constantly-adjustable driver's seat, which can be moved forward or back at pleasure and at all times for the purpose of placing the weight of the driver on any part of the machine, forward or back, to cause his weight to aid in holding the cutters to their work or to relieve them at any time.

To enable others skilled in the art to make and use my invention I will proceed to describe the same with reference to the drawings.

A rectangular frame is first made of three longitudinal pieces, A A A, and two cross-pieces, B B, which is supported on the journals of an axle, C, provided with two driving-wheels, D E. One of these wheels, D, is fast on said axle, and the other, E, is fast and loose as circumstances may require, as follows:

a is one part of the clutch, fast on the axle, the other part of said clutch, *b*, being formed on the inner part of the hub of the wheel E.

c is a spring bearing against the outer side of the hub on which one-half of the clutch is formed, and holds into gear with the fixed half *a*, the projections or teeth of the clutch being so formed that when the machine is drawn forward both wheels revolve with the axle; but when the machine is turned round, the turning being almost invariably toward the cutters, said wheel E becomes loose from the clutch and turns on the axle, and thus facilitates the turning. Both wheels are therefore driving-wheels when the machine is cutting grain or grass, and besides the weight of the machine the weight of the driver is divided on the two wheels, and I thus avail myself of all the weight to throw friction on the driving-wheels to prevent them from slipping.

The wheel D is provided with cogs on the inner edge of its perimeter, which mesh with a pinion, F, on one end of the shaft *d*, and on the other end of said shaft *d* is a cog bevel-wheel, G, working into a pinion, *e*, on the shaft *f*, and to a crank on the lower end of this shaft *f* is fastened one end of the rod *g*, the other end being attached to the cutter-blade *h* to vibrate it. The cutter-blade *h* works under guides *i* at its rear, and is protected by fingers *j* in front.

The cutter-bar is composed of two pieces, H I, united together by bolts passing through a lap of their adjoining ends. The half H sustains the draft of the cutters and bar, and the half I, carrying the cutter-blade, fingers, &c., drags along on the ground. The object in making them of two pieces is that if one should get broken or wear out it could be replaced without removing the other half. The cutter-bar H I, thus made, is hung to the main frame by two rods, *k k*, hooked into dead-eyes *l* in the front cross-piece B, and extending back to the rear of the frame, where they are similarly hooked to the cutter-bar. By this manner of hanging the cutter-bar it is free to rise and fall to every projection or depression on the surface of the ground, and that, too, without regard to the rising or falling of the frame of the machine as the wheels mount over or run into uneven places. These two rods *k* would not, however, prevent the cutter-bar from moving laterally, and to prevent any lateral motion I use another bar, *m*, hooked into a suspended piece, J, at one end, and to the cutter-bar at *n* by its other end. This keeps the cutter-bar always right in its lateral position without preventing said cutter-bar from rising and falling as it conforms to the undulations of the ground or in passing over a stone or other impediment.

K is the driver's seat. It is connected to the supports *o o*, which run from front to near the rear of the frame, by loops *p p*, so that the driver may, without rising from his seat and by simply using his feet, move it forward or back, so that his weight may be
789½ used to balance the machine and throw the cutters into or out of the grass.

To a standard, L, on the right-hand longitudinal piece A, is hung a lever, M, to the rear end of which is hung by a chain, N, the cutter-bar H I, at about its center.

Near the front end of the lever M, which is provided with a handle, *r*, and a spring-catch, *s*, is an upright piece, O, supported in the frame and provided with any suitable number of notches, *t*, into which the spring-catch *s* will drop when it is released from the hand of the driver. By means of this lever M the driver can raise or hold up the cutter-bar and cutters when it is desirable to raise them for any purpose.

P is the tongue, centrally placed on the frame or between the wheels, so as to put the horses near the center of the line of draft.

A seat for the driver, which was susceptible of adjustment, has been used; but this seat, when adjusted, was permanent, and consequently the driver could not move himself forward and back as the exigencies of the case might require—as, for instance, when working on ascending or descending ground, or in light or heavy grass, all of which may occur within a few rods—and if the machine must be stopped to make separate adjustments for these contingencies, he would be doing little else. By my mode of arranging the seat the driver may aid the machine by shifting his weight at any time as occasion may require.

Having thus fully described the nature of my invention, I would state that adjustable seats, or seats that can be adjusted, have been

used; but to do this the machine must be stopped, and the adjustment, when made, is permanent. This I do not claim; but

What I do claim as of my invention, and desire to secure by letters patent, is—

1. The hanging of the cutter-bar to the main frame by means of the longitudinal rods *k* and transverse rod *m*, so that said cutter-bar may be free to rise and fall to the undulations of the ground, while it is prevented from all lateral motion, substantially as described.

2. The use of a driver's seat when mounted on ways or rails so that the driver can at pleasure throw his weight forward or backward to aid in balancing the machine or in holding or relieving the cutters as the variable character of the ground or condition of the grass may require, as described.

JONATHAN HAINES.

Witnesses:
THOMAS H. UPPERMAN.
EMIL COHEN.

(Here follow diagrams marked pp. 790 to 796, incl.)

797 UNITED STATES PATENT OFFICE.

GEO. C. DOLPH, of West Andover, Ohio.

Improvement in Mowing-Machines.

Specification forming part of Letters Patent No. 18141, dated September 8, 1857.

To all whom it may concern:

Be it known that I, George C. Dolph, of West Andover, in the county of Ashtabula and State of Ohio, have invented a new and useful improvement in E. Ball's mowing-machine, for which a patent was granted June 11, 1856; and I do hereby declare that the following is a full and exact description thereof, reference being had to the accompanying drawings, in which—

Figure 1 is a general view of E. Ball's mowing-machine with my improvement attached; Fig. 2, a side elevation, and Fig. 3 a detached section of the same.

Like letters denote like parts in the several views.

My improvement relates to the manner of tipping or lowering and raising the cutters and cutter-bar. The many advantages to be derived from raising and lowering or tipping the cutters and cutter-bar of mowing-machines are so well understood that they need not be here enumerated.

The cutters A and cutter-bar B are so connected to the frame in Ball's machine that the cutters A and bar B are adjustable only longitudinally, but in my improvement the cutters and bar are made adjustable at right angles.

In Ball's mower the rod C is connected to the bar B by a joint at D, and that rod is also connected to the brace E by a joint at F.

790

2 Sheets—Sheet 1.

J. HAINES.

Mower.

No. 13,523. Patented Sept. 4, 1855.

No. 379.
McCormick et al
v.
Whitmer, Admr.
} p 790

Fig. 1,

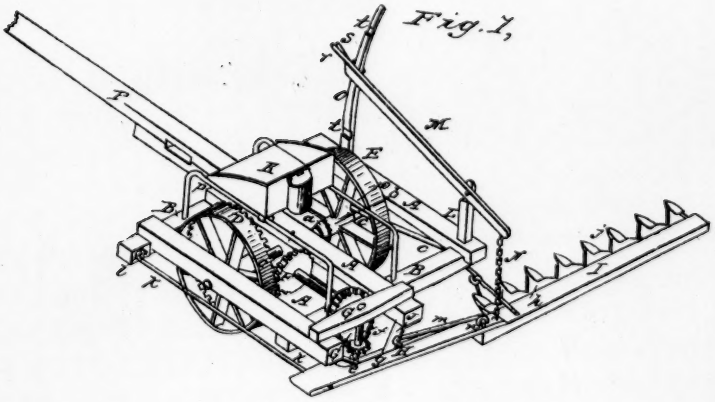

2 Sheets—Sheet 2.

J. HAINES.

Mower.

No. 13,523. Patented Sept. 4, 1855.

No. 349.
McCormick et al
v.
Whitmer, Adm.
p. 791

Fig. 2,

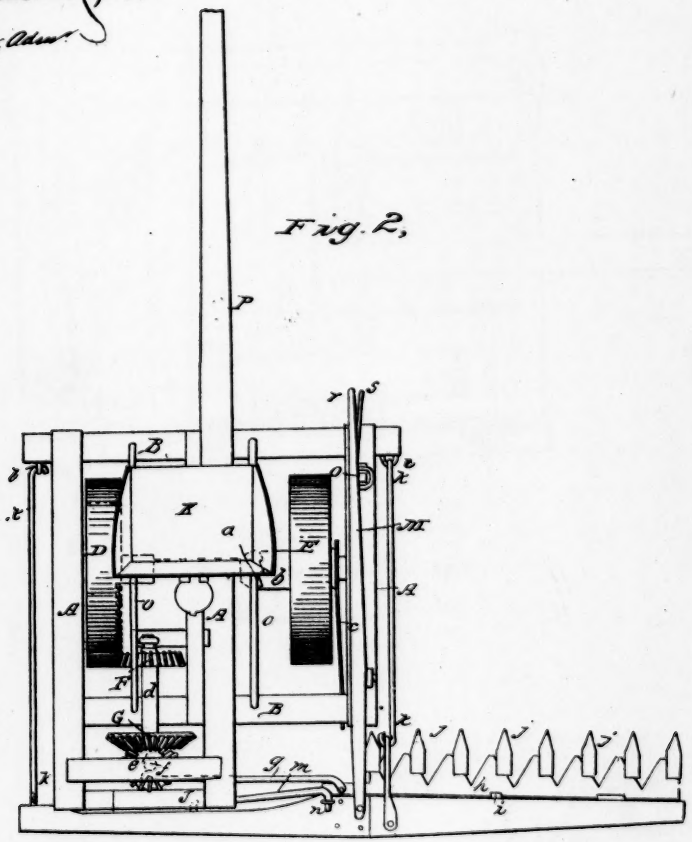

792
Sheet 1–4 Sheets.
792

J. Haines.

Mower.

No. 2986 Reissued Jun. 16, 1868.

Fig. 1.

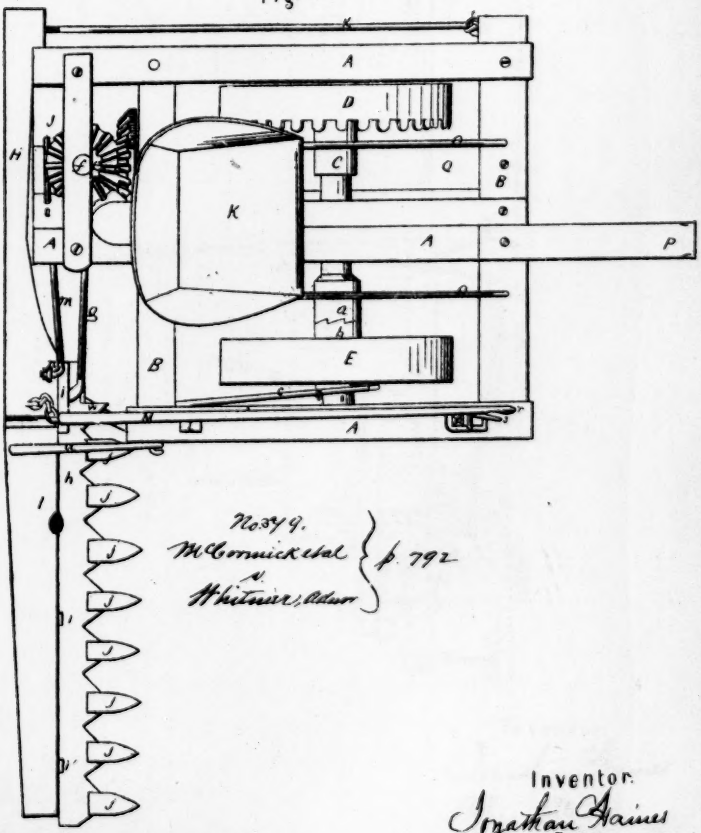

No. 349.
McCormick et al
v.
Whitmer, Admr
p. 792

Witnesses.
Philip C. Dieterich
Thos. T. Parker.

Inventor.
Jonathan Haines
By his Atty
R. D. Ohmitt

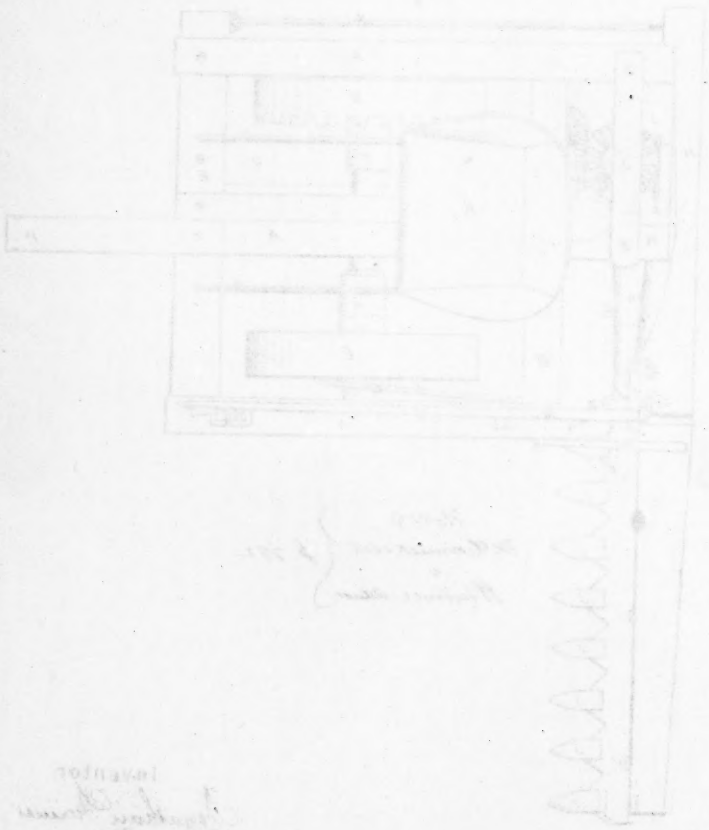

No. 379.
McCormick et al. } p. 793
v.
Whitmer, Admr.

Sheet 2. 4 Sheets.

793

J. Haines.

Mower.

No. 2986 Reissued Jun. 16, 1868.

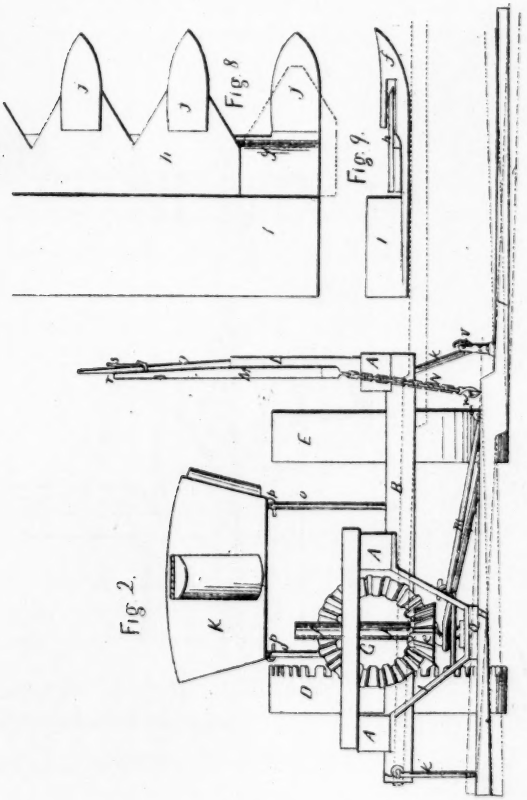

Witnesses.
Philip C. Dieterich
Thos. T. Parker

Inventor.
Jonathan Haines
By his atty
R. D. Ohmitt

J. Haines.

Mower.

No. 2986 Reissued Jun. 16, 1868.

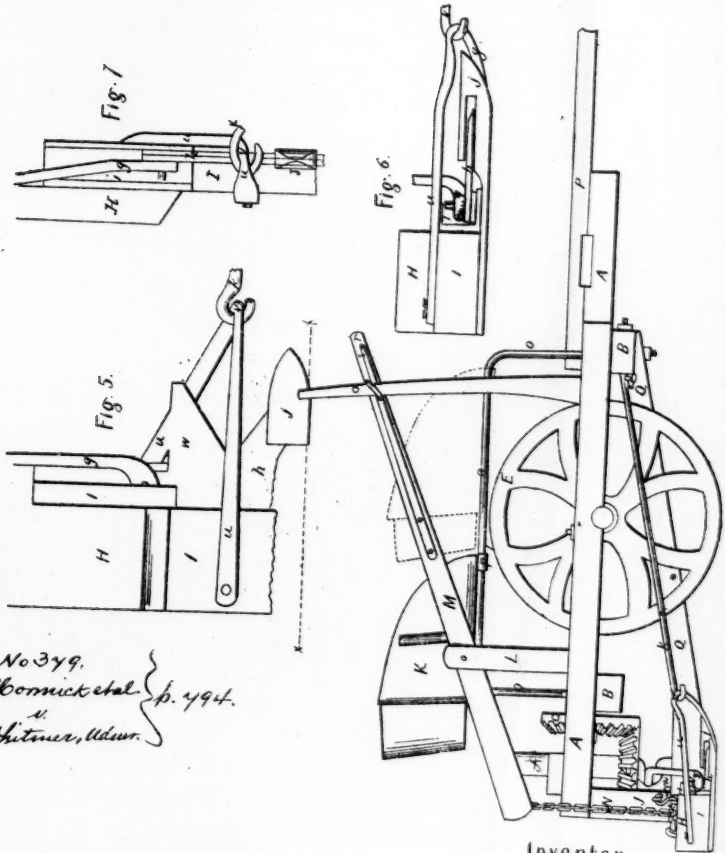

No 379.
McCormick et al.
v.
Whitmer, Udwr.
p. 794.

Witnesses.
Philip C. Dieterich
Thos. F. Parker.

Inventor.
Jonathan Haines
By his atty
R D Smith

Sheet 4. 4 Sheets.

J. Haines.

Mower.

No. 2986 Reissued Jun. 16, 1868

No. 379.
McCormick et al. } p. 795.
v.
Whitmer, Admr.

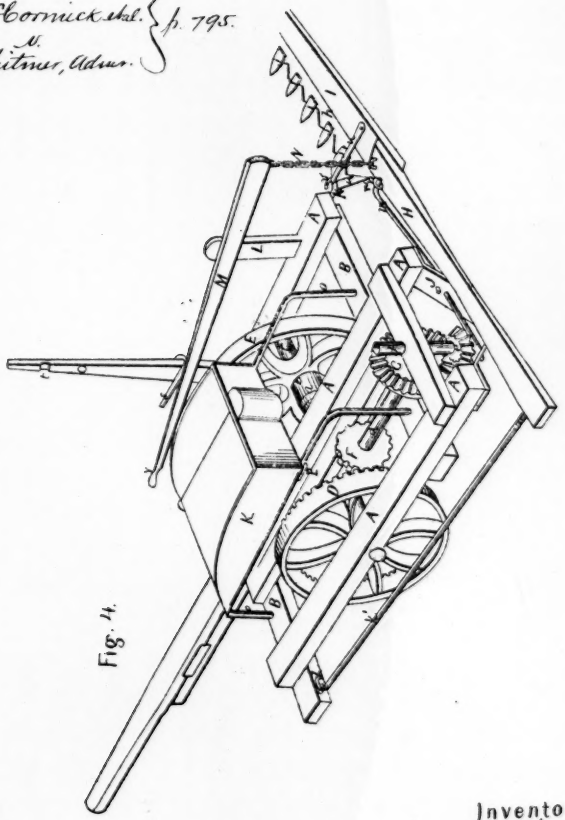

Fig. 4.

Witnesses.
Philip C. Dieterich
Wm. T. Parker

Inventor.
Jonathan Haines
By his atty
R. D. Smith

No. 379.
McCormick et al
v
Whitney, Admr.
p. 796

G. C. DOLPH.

Mower.

No. 18,141. Patented Sept. 8, 1857.

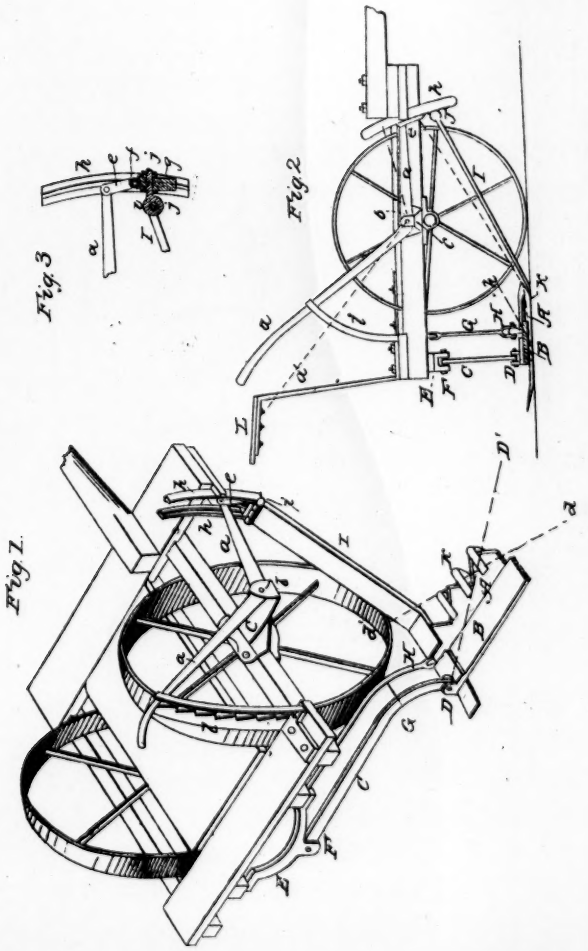

L. MILLER, Assignor to C. Aultman & Co.

Mower.

No. 20,180. Patented May 4, 1858.

No. 349.
McCormick et al.
v.
Whitney, Admr.
} p. 798

Fig. 1.

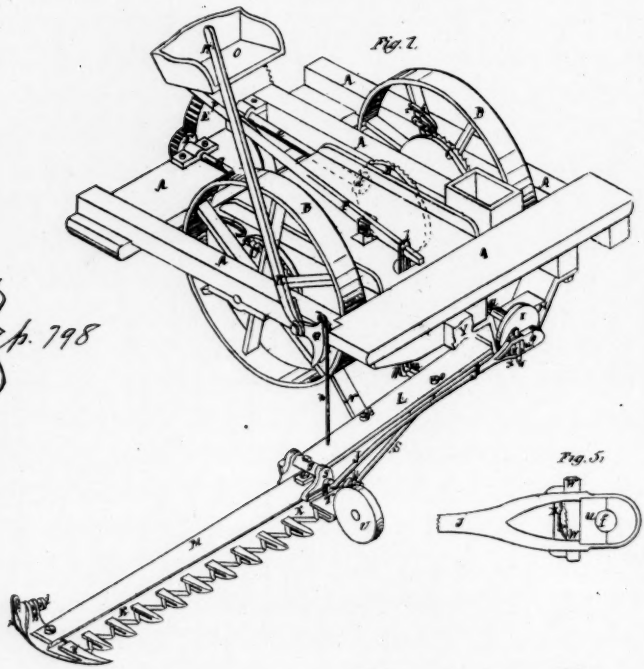

Fig. 5.

Fig. 2.

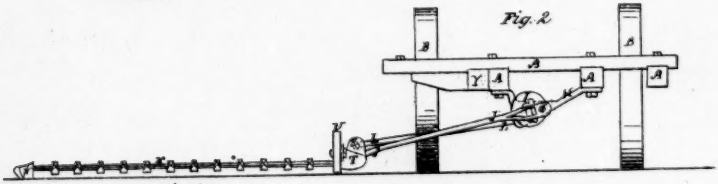

Fig. 4.

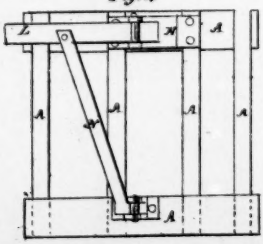

Fig. 3.

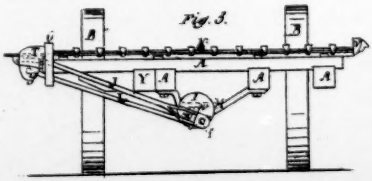

The rod G is connected to the cutters at H by a joint, and at the opposite end to a crank. One end of the brace-bar I is firmly attached to the cutter-bar and the other end to a wrist at J. This wrist is so arranged that it turns in a stationary box or socket. By this combination of devices the cutters and cutter-bar are allowed to move only in the manner indicated by the lines D′ *d d′*, Fig. 1, and the devices render the cutter-bar and cutters adjustable only so far as raising one end at a time. When the outer end of the cutters and cutter-bar is raised they assume a position indicated by the line from D to D′, and when the foot of the cutters and bar is raised they assume a reverse direction, indicated by the line *d d′*. The bar and cutters by this arrangement cannot be raised entirely from the ground in a parallel direction; nor can the guards K and cutters be tipped up or raised from K to a position indicated by the line *k*.

What distinguishes my improvement in the described mower is the manner of raising and lowering or tipping the cutters and bar from K to *k* or any intermediate position. The cutters and bar may be thus operated from the seat L, Fig. 2, or from the ground. The devices employed for this purpose consist, first, of the lever *a*, which works upon a fulcrum pivot or wrist, *b*, on the stand or bracket *c*, which bracket is fastened to the frame. To the short arm of the lever are attached by a pin-joint one or two links, *e*, Figs. 1 and 3. These links *e* are also connected by a pin-joint at *f* to the sliding box *g*. On each side of this box is a slot or gain, by means of which the box slides up and down upon the ways or guides *h h*, which are bolted to the frame. These ways form sections of a circle, which is the radius described in raising and lowering the slide-box between the two guides *h h* by the action of the lever *a*. The brace-bar I is connected by a joint at *i* to the wrist *j*. This wrist passes through the slide-box *g*, in which it is allowed to turn, and is retained in place by a nut or pin, as seen in Fig. 3. By depressing the lever *a* in the direction of the line *a′* the brace-bar, by its connection with the slide-box, will be raised correspondingly; also the cutters and cutter-bar, as indicated by the line *k*. By the raising and depressing of the lever the cutters and bar may be tipped more or less as the nature of the case may require, and may be retained in any desired position by slipping the lever into the teeth of the rack *l*, which is attached to the frame.

What I claim as my improvement, and desire to secure by letters patent, is—

The lever *a*, links *e*, sliding box *g*, and guides *h h*, with the adjusting-wrist *j*, when arranged as herein set forth, and in relation to an adjustable cutter-bar, as described, for the purpose specified.

GEORGE C. DOLPH.

Witnesses:

S. H. MATHER,

I. BRAINERD.

(Here follows diagram marked p. 798.)

799 UNITED STATES PATENT OFFICE.

LEWIS MILLER, of Canton, Ohio, assignor to C. Aultman & Co., of same place.

Improvement in Harvesters.

Specification forming part of Letters Patent No. 20180, dated May 4, 1858.

To all whom it may concern:

Be it known that I, Lewis Miller, of Canton, in the county of Stark and State of Ohio, have invented certain new and useful improvements in the manner of hanging and carrying the cutter-bar of mowing-machines; and I do hereby declare the following to be a full, clear, and exact description of the construction and operation of the same, reference being had to the accompanying drawings, making a part of this specification, in which—

Figure 1 represents in perspective the machine as arranged for mowing grass. Fig. 2 represents a front view with the cutter-bar in its working position. Fig. 3 represents a similar end view with the cutter-bar folded over and resting on the main frame for facility of transportation from place to place. Fig. 4 represents the manner of bracing the finger or cutter bar from the rear of the main frame, so that it may have the necessary rigidity in every other direction than the one in which it folds over onto the frame.

Similar letters of reference, where they occur in the several figures, denote like parts of the machine in all of them.

The nature of my invention consists in so hanging and bracing the cutter or finger bar of a mowing-machine to the main frame as that while it is sufficiently rigid to withstand all the resistance against it when the machine is in operation, yet it may be raised up, folded over, and rested upon the main frame for facility of transportation, as will be explained.

To enable others skilled in the art to make and use my invention I will proceed to describe the same with reference to the drawings.

A represents the main frame of the machine, which is supported upon an axle, which in turn is supported in two wheels, B. B. These wheels B B are loose upon their axle; but by means of a peculiarly-constructed spring-pawl, *a*, on each of said wheels, and a ratchet-wheel, C, fast on the axle near each wheel, they can be made fast and loose at pleasure, so as to act as driving and supporting wheels, or the latter only, as occasion may require. The pawl *a*, of which there may be one, two, or more to each wheel, has a bow-spring, *b*, riveted to its front end, and the rear end of this bow-spring rests upon a pin, *c*, fastened to the same spoke of the wheel to which the pawl itself is pivoted. This bow-spring so arranged acts equally in holding the pawl (when thrown back) from the ratchet as it does (when dropped down) to the ratchet, and thus by a simple construction becomes equally serviceable in both capacities, insuring certainty of action or non-action, as the case may be.

On the axle there is a beveled gear-wheel, D, which takes into and

operates a pinion, *d* (in dotted lines), on the shaft *e*. The shaft *e* extends rearward to the rear end of the frame and inclines upward, so that its rear end is higher than its front end, and on the rear end of said shaft *e* there is a gear-wheel, E, that takes into and turns a pinion, F, on the shaft G. The shaft G extends from the rear to the front of the machine, and underneath the main axle that carries the supporting and driving wheels B B, its front end being supported in a bolster or pillow-block, H, suspended to the under side of the front cross-piece of the main frame. By this mode of arranging the gearing the parts are kept up high enough on the frame to prevent them from catching or clogging by the grass or grain, and the driving-shaft G still passes underneath the main axle, which is important in the operation of the machine.

To the front end of the shaft G there is attached a crank or crank-wheel, I, to a wrist, *f*, in which one end of the pitman or connecting-rod J is attached, the other end of said pitman being attached to the cutter-bar or cutters K, and by which said cutters are vibrated.

A beam, L, is hinged by one of its ends to the under side of the bolster or pillow-block H, and to the other end of this beam L is hinged, as at *g*, the finger beam or bar M, said beam L being additionally braced to the main frame by a brace, N, which is permanently secured to the beam at *h*, but which passes transversely rearward, and is hinged at its rear end to the main frame, as shown at *i*, Fig. 4. This allows the brace N to rise and fall with the beam L and still perform its function of a brace to said beam, and to the finger-bar attached to said beam to keep it in its proper position.

O is the driver's seat, placed on the opposite side of the
799½ main axle from the cutter-bar, beam, &c., for the purpose of balancing the machine and allowing the driver to throw his weight in such direction or position as will aid the machine, in passing over obstructions, to throw it into or out of the grass or grain, as circumstances may require, and generally to manage and control the machine by his position in the seat. A lever, P, having its fulcrum at *k*, on the main frame, extends from the driver's seat to near the front of the frame, and holds upon its front end a stirrup, *l*, which hangs down perpendicularly and has a slot in it, in which slot an arm, *m*, on the beam L rests, so that the beam may rise independent of the lever or its stirrup, but so that when required the driver may, from his seat, raise said beam for any emergency, and lower it again when necessary.

A segment, Q, having a lever, R, connected to it, is pivoted to that side of the main frame next the standing grass or grain, at a point over the beam L, said beam being suspended to said segment or arc and lever by a cord or chain, *n*, so that it may be raised or lowered or adjusted thereby. On the inner face of the arc (next the frame) there is a ratchet, the teeth of which will catch and hold against a dog fastened to the frame, so that the beam L may be held at any desirable adjusted height.

A brace, S, extends from the beam L to the inside shoe, T, to support it, this brace being rigid at its end *o* and hinged at its end *p*, said hinge being in line with the one, *g*, connecting the finger-bar

M with the beam L. It will also be perceived that the pitman J is connected to the cutters or cutter-bar by a jointed connection, as at *q*, which joint, at a certain position in the line of vibration of said cutters, also comes into or near the plane of the other hinges, *g p*, so that the beam L may be raised up close to the under side of the front cross-piece of the frame, and then the cutter and finger-bar folded over, so as to lie upon the top of said front piece of the frame, as shown in Fig. 3, where it can rest while the machine is moved from place to place.

Fig. 2 represents the cutters as in position for mowing, with their several connections in their working positions, while in Fig. 3 is represented the positions of the same parts when the cutters and their beam, &c., are folded over and resting on the main frame.

T is the inside shoe, having a wheel, U, peculiarly located thereon, and V is the outside shoe or divider, having an adjustable sole or runner, *r*, thereon, and a slot, *s*, and pin *t* for a track-clearer; but as these shoes or dividers constitute the subject-matter of another application for letters patent their peculiar functions need not here be more fully referred to, their general position being shown in the drawings.

In Fig. 5 I have shown on an enlarged scale the manner of holding the key W in place against the adjustable half *u* of the box that the wrist-pin *f* on the crank-wheel I works in. It has been found very difficult heretofore to keep this key in its place, the motion or jar of the machine causing it to jump out, and thus loose, injure, or break the parts. I prevent this in the following manner, viz: I make ratchet-teeth on one face of the key, into which a spring-dog, *v*, that is fast on the double-headed key X, takes, and thus entirely prevents the key W from getting loose or jumping out. When it becomes necessary to tighten the follower *u* the key W is tapped down, the dog slipping over the inclined face of the ratchet-teeth and taking into each tooth and there firmly holding the key when adjusted. To take out the key or detach the pitman a pointed tool is put against the spring-dog *v*, pressing it into the recess in the double-headed key X, and then the key W can be raised out and the parts disconnected.

The machine here represented has upon it all the necessary fixtures for attaching a platform and reel to convert it into a reaping-machine. Some of these connections, forming the subject-matter of other applications for letters patent, need not here be alluded to in detail.

Y represents the broken end of the tongue, showing its point of connection to the main frame.

Having thus fully described the nature and object of my invention, what I claim therein as new, and desire to secure by letters patent, is—

1. So hinging the bar or beam which carries the cutters and fingers to the beam L as that it may be raised up, folded over, and carried upon the main frame, substantially as herein described.

2. In combination with the beam L, hinged as herein described, the braces N S, rigidly connected therewith, but hinged at their op-

posite ends, so that the beam L may rise and fall at pleasure, but be permanently braced in its proper position to give the cutter and finger bars or beams in turn their proper working position, as herein described and represented.

LEWIS MILLER.

Witnesses:
DANIEL GOTSHALL.
ELI WAGNER.

800 Tag attached marked as follows: U. S. circuit court, nor dist. Illinois. Hugh Graham *vs.* Cyrus H. McCormick *et al.* 4. Def'ts' Exhibit Stetson & Maynard Patent No. 24063. Jno. H. Whipple, notary public.

(65.)

DEPARTMENT OF THE INTERIOR,
UNITED STATES PATENT OFFICE.

To all persons to whom these presents shall come, Greeting:

This is to certify that the annexed is a true copy from the records of this office of the letters patent granted Stetson and Maynard, May 17th, 1859, #24063, for "improvement in harvesting machines."

In testimony whereof I, W. H. Doolittle, acting Commissioner of Patents, have caused the seal of the Patent Office to be hereunto affixed this thirteenth day of August, in the year of our Lord one thousand eight hundred and seventy-nine, and of the Independence of the United States the one hundred and fourth.

[SEAL.] W. H. DOOLITTLE,
Acting Commissioner.

801 No. 24063.

United States of America to all to whom these letters patent shall come:

Whereas W. S. Stetson & R. F. Maynard, of Baltimore, Maryland, have alleged that they have invented a new and useful improvement in harvesting machines, which they state has not been known or used before their application; have made oath that they are citizens of the United States; that they do verily believe that they are the original and first inventors or discoverers of the said improvement, and that the same hath not, to the best of their knowledge and belief, been previously known or used; have paid into the Treasury of the United States the sum of thirty dollars, and presented a petition to the Commissioner of Patents signifying a desire of obtaining and exclusive property in the said improvement, and praying that a patent may be granted for that purpose: These are, therefore, to grant, according to law, to the said W. S. Stetson & R. F. Maynard, their heirs, administrators, or assigns, for the term of fourteen years from the seventeenth day of May, one thousand eight hundred and fifty-nine, the full and exclusive right and liberty of making, constructing, using, and vending to others to be used the said improvement, a description whereof is given in the words of the said W. S.

Stetson & R. F. Maynard in the schedule hereunto annexed, and is made part of these presents.

In testimony whereof I have caused these letters to be made patent and the seal of the Patent Office has been hereto affixed.

Given under my hand, at the city of Washington, this seventeenth day of May, in the year of our Lord one thousand eight hundred and fifty-nine, and of the Independence of the United States of America the eighty-third.

[SEAL.] JACOB THOMPSON,
Secretary of the Interior.

Countersigned and sealed with the seal of the Patent Office.
S. T. SHUGERT,
Act'g Commissioner of Patents.

(Here follows diagram marked p. 802.)

803 UNITED STATES PATENT OFFICE.

W. S. STETSON and R. F. MAYNARD, of Baltimore, Maryland.

Improvement in Harvesting Machines.

Specification forming part of Letters Patent No. 24063, dated May 17, 1859.

To all whom it may concern:

Be it known that we, W. S. Stetson and R. F. Maynard, of Baltimore, in the county of Baltimore and State of Maryland, have invented certain improvements in harvesters; and I do hereby declare that the following is a full, clear, and exact description of the principles or characters which distinguish them from all other things before known, and of the usual manner of making, modifying, and using the same, reference being had to the accompanying drawings, of which—

Figure 1 is a perspective view of the machine; Fig. 2, a detached view of the connecting-rod; Fig. 3, a detached view of that end of the lever *k* which runs in the cam-groove and the friction-roller on the end of the lever; Fig. 4, a side elevation of one of the fingers or teeth; Fig. 5, a plan view, showing two teeth or fingers in one section or division; Fig. 6, a cross-section through the middle of one of the fingers; Fig. 7, a side elevation of one of the fingers, with an obtuse angle at its base; Fig. 8, a top view of knives and fingers, showing by red and black lines the range of motion or length of stroke given to the knives, and Fig. 9 is a detached view in perspective, showing the connection of the lever for adjusting the finger-bar.

Our invention consists in certain improvements in harvesters, described and specified as follows:

Upon the axle *a* of the carriage-wheels is hung a saddle-frame, *b*, by the collars *c c*, in such manner as to vibrate about the axle. The

Stetson & Maynard.

Mower.

No. 24063 Patented May 17, 1859

No. 379.
McCormick et al.
v.
Whitmer, Admr
p 802

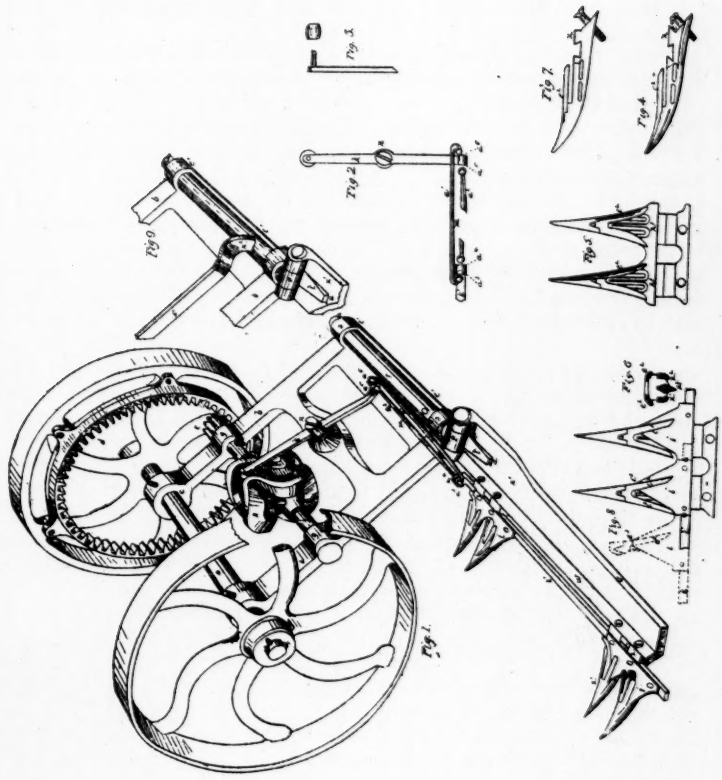

Witnesses
Robt. Sinclair Jr.
David Scully

Inventor.
W. S. Stetson
R. F. Maynard

lower end of this frame rests and runs upon the ground upon a rounded heel, e'.

d is the crown-gear which drives the pinion e, and upon the pinion-shaft f, which runs in the boxes g g in the saddle-frame, is a double spiral cam, h, the office of which is to give reciprocating motion to the knives i through the mediun of the vibrating lever k and the connecting-rod m. The fulcrum n of lever k is in the center of the lever, thus giving to the knives the same length of stroke as the vibration of the cam, which obviates to a great extent the jarring and rough working so common in the cam movements used in harvesters, where large cams are used on the driving-wheels as the primary gear.

The connecting-rod m is of a peculiar construction and specially adapted to convey motion from the cam-lever to the cutter-bar, and is found preferable on some accounts to a ringle rod with ball-and-socket or universal joints at its ends. It consists of two rods, a' a^2, and four sockets, a^3 a^4 a^5 a^6, two in the end of the vibrating lever k and two in the end of the cutter-bar k'. These sockets are to receive the balls or rounded heads on the ends of the rods a' a^2. The rod a' has its ends bent inward, as shown in Fig. 2, and the rod a^2 is straight. When the balls on these rods are in their respective sockets, according to their position shown in Fig. 1, it will be seen that they act together as one rod, while there is sufficient freedom of motion in the joints to accommodate the various motions of the cutter-bar and finger-bar.

The finger-bar n' rests upon the ground, and has all the necessary motions of adjustment and accommodation to unevenness of the ground given to it by the very simple and efficient connections with the saddle-frame shown in Fig. 1. It adapts itself to slopes of the ground by means of the hinge-joint p, and is adjustable as to height of cut by its motion about the axis of the shaft r. The shaft r turns in the collars s just above the heel of frame b, and is prolonged so as to make the support or axis of the hinge-joint p. It is also prolonged beyond this joint into the brace-piece t, which lies in a slot or opening, u, in the finger-bar and acts as brace to the hinge-joint p. The finger-bar n' is of a particular form. (Shown in Fig. 1.) The rear portion, v, rests flat upon the ground, and the forward part, w, rises from the part v at an angle of forty-five degrees, or thereabout. The front upper edge of w is shown as inclined in Fig. 1, so as to fit the right angle e^4 at the base of the tooth; but for facility of casting we prefer to make it perpendicular, as shown in Fig. 7, the mechanical effect of bracing the tooth being the same in both cases, and this edge and the under surface of w are embraced by the base of the fingers x, which are of the forms shown in Figs. 4 and 7. A large bearing-surface is thus gained, and when the fingers are bolted to the bar they are very firm, the direction of the bolt being shown in Fig. 4.

Instead of constructing and attaching the fingers separately or in a whole set, we make them in divisions or sections of two or more, Fig. 5, by which we combine a sufficient amount of firmness with facility of attachment or removal in putting up the machine or in

case of repairs, and also facility of casting the fingers. We make two openings, x' x^2, of the form shown in section in Fig. 6, through the lower part of the fingers, and the upper edges of these openings form shearing or cutting edges.

We are aware that an opening has hitherto been made through the finger; but by means of the two openings we gain two additional shearing-edges, the two middle ones on the upper edge of division x^3 being the most efficient, in conjunction with the back-and-forth motion of the knife-edges, in cutting up or reducing and clearing away gummy matter and the refuse stuff, which tends constantly to clog and impede the motion of the knives. The fingers are also lighter without losing any material portion of strength. We divide the finger-guard into two portions, e^2, and each of these portions is made concave on the under side, as shown in Fig. 6, and they are inclined so as to bring their outer edges near to the knives, while their inner edges are elevated. This form and the inclination of the divisions of the guard are attended with great advantages in respect to keeping the knives clean and removing all obstructions to their motion, and at the same time the weight is lessened without detracting from their necessary strength.

Another important feature of our harvester, in connection with the open tooth and its cutting-edges, is making the stroke of the knife-bar of such length that the knife-points e^3 shall pass the distance from the outside edge of one tooth to the outside edge of the adjacent tooth, as shown by the red lines in Fig. 8, by which means the knife-edges cut over the edges of two teeth, and also pass over the middle cutting-edges, which keeps the knives and teeth very clean of gummy matter and obstructions and makes a very efficient cut. The adjustment of the finger-bar is effected by means of the lever u^2, connected with the axis r, as shown in Fig. 9.

We claim—

1. The double hinge-joint at the end of the finger-bar, consisting of the hinge p, shaft r, collar s, and brace t, arranged and operating in the manner described, for the purpose specified.

2. The compound connecting-rod m, constructed and operated as set forth.

3. We do not claim attaching the fingers or teeth to an angle-iron bar, as that has been before done; but we do claim so constructing or forming the upper part of the obtuse-angle-iron tooth-bar and the base of the finger or tooth that said base shall bear upon two plane faces of the said angle-iron, in the manner and for the purposes set forth.

W. S. STETSON.
R. F. MAYNARD.

Witnesses:
ROB SINCLAIR, JR.,
DAN'L SCULLY.

(Here follows diagram marked p. 804.)

L. Miller.

Mower.

No 766

Reissued Jul. 19, 1859

No. 349. McCormick et al. v. Whitney & Adams } p. 584

Fig 1.

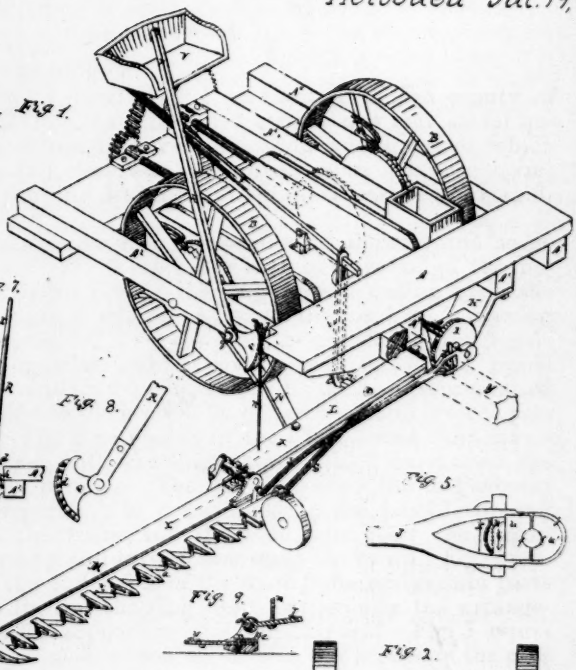

Fig 6.

Fig 7.

Fig 8.

Fig 5.

Fig 9.

Fig 2.

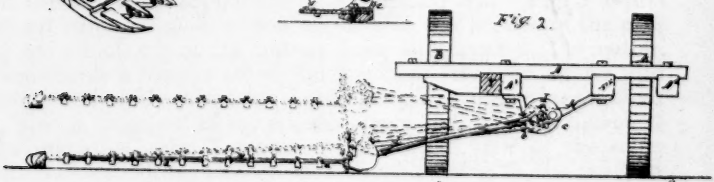

Fig 4.

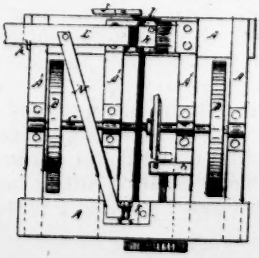

Fig 3.

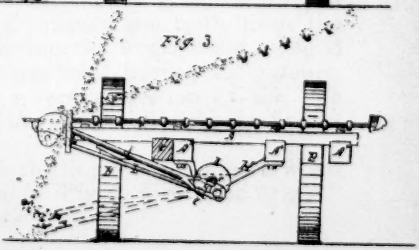

805 UNITED STATES PATENT OFFICE.

LEWIS MILLER, of Canton, Ohio, assignor to C. Aultman & Co.

Improvement in Harvesters.

Specification forming part of Letters Patent No. 20180, dated May 4, 1858; Reissue No. 766, dated July 19, 1859.

Division C.

To all whom it may concern:

Be it known that I, Lewis Miller, of Canton, in the county of Stark and State of Ohio, have invented certain new and useful improvements in machines for harvesting grain and grass, of which the following is a full, clear, and exact description, reference being had to the accompanying drawings, which make part of this specification, in which—

Figure 1 represents a view in perspective of the machine as arranged for mowing. Fig. 2 represents a front elevation of the machine, the black lines showing the finger-beam resting upon the ground in the position it will occupy when the machine is mowing on a level surface, the red lines showing the position of the finger-beam when mowing on an uneven surface, with its left end raised to conform thereto, and the blue lines showing the finger-beam raised off and held parallel to the ground by means of a hand-lever to pass over an obstacle. Fig. 3 represents by the black lines a front elevation of the machine, with the finger-beam folded over upon the frame in a compact manner. The red lines show the finger-beam raised on end preparatory to being lifted by the hand-lever, and turned over upon the frame, and the blue lines show the finger-beam almost raised up and turned over upon the frame. Fig. 4 represents a view of the under side of the main frame and certain parts connected therewith, but showing more particularly the arrangement of the brace for supporting the coupling-arm. Fig. 5 represents on an enlarged scale a view of one side of a portion of the connecting rod which transmits motion from the crank to the cutter. Fig. 6 represents a front view of the quadrant-lever for lifting and the ratchet-teeth and detent for holding up the finger-beam when raised; also, a fragment of the adjacent part of the frame detached from the machine. Fig. 7. represents a similar view of the same parts, the quadrant-lever and its ratchet-teeth being in the position they occupy when turned aside to disengage the teeth from the detent preparatory to raising or lowering the finger-beam. Fig. 8 represents a view of the side of the quadrant having the ratchet-teeth thereon; and Fig. 9 represents a vertical section at the line *x x* of Fig. 1, showing the knuckle of the joint connecting the finger-beam and coupling-arm.

That side of the machine on which the finger-beam projects when on the ground in the position shown in Fig. 1, I call the "right" side. The other I call the "left" side.

In operating mowing-machines it often happens that the cutter becomes bound more or less in the slots of the guard-fingers by reason of grass wedging in between the sides of the slots in the fingers and the sides of the cutter; and in working the cutter under such circumstances great force has to be exerted, which force, being sustained by the bearings of the crank, is apt to overstrain and work loose that part of the frame which sustains the bearing, and if the bearing of the crank be supported by a hanger or bracket projecting from the frame this liability to work loose is greatly increased. If the finger beam be drawn by a coupling-arm hinged to a hanger or bracket on the frame, the force required to drive the cutter acts on the hanger or bracket which carries the hinge of the coupling-arm in one direction with the same force with which it acts in the opposite direction on the hanger or bracket which carries the bearing for the journal of the crank, and as the direction in which these forces act upon the hangers or brackets is reversed with every reversal of the motion of the cutter it is found to be difficult, if not impossible, especially in a wooden frame, to fasten these hangers so that they will not work loose. This working of the hangers impairs the durability of the machine, but is objectionable chiefly because it varies the stroke of the cutter, and thereby impairs its shearing action, and thus lessens the efficiency of the machine, and therefore it is of greater importance to remedy this defect, and my contrivance for that purpose is the subject of this patent; and it consists in combining the bearing for the journal of the crank and the hinge of the coupling-arm with a hanger or bracket which is made common to both; and therefore any irregular or accidental yielding or vibration of the crank is imparted equally to the coupling-arm, finger-beam, and cutter, thus preventing any of the derangements of the stroke or action of the cutter, which are inevitable when the crank-bearing and the hinge of the coupling-arm are supported on separate brackets. Besides, this arrangement lessens the cost of construction and the weight to be drawn by making one of the two hangers or brackets heretofore used perform the duty of both.

805½

The accompanying drawings represent a mowing-machine having its main frame A A′ A² A³ A⁴ A⁵ supported by an axle, C, and a pair of wheels, B and B′, and having a tongue, Y, for the horses to draw it by, projecting from the front of the main frame.

A finger-beam, M, projects from the right side of the frame, to which it is connected by an intermediate coupling arm, L, hinged at its right end to the finger-beam, and at its left end to a hanger or bracket, H, projecting some distance downward from the under side of the main frame. This hanger, in addition to supporting the hinge *b* of the coupling-arm, also supports the bearing *c* for the journal of the crank, which imparts a vibratory motion to the cutter K through a connecting-rod, J. The hinge and bearing are placed as near as possible, in order that the raising and lowering of the coupling-arm may be on an axis of motion, as near as may be, coincident with the axis of motion of the crank, and thereby prevent any injurious interference

with the stroke of the cutter from the movements of the coupling-arm.

The parts of the machine which have not been particularly described do not relate to the subject-matter of the claim under this patent, and need nor therefore be further referred to here.

What I claim under this patent as my invention is—

The combination of the crank and the bearing for its journal, the cutter, the coupling-arm, and the hinge of its inner end, with a hanger which is made the common support for the hinge of the coupling-arm and the journal of the crank, arranged and operating substantially as herein set forth.

In testimony whereof I have hereunto subscribed my name.

LEWIS MILLER.

Witnesses:

S. HAWKES.

JAS. S. TONNER.

806 (65.)

DEPARTMENT OF THE INTERIOR.

[Vignette.]

UNITED STATES PATENT OFFICE.

To all persons to whom these presents shall come, Greeting:

This is to certify that the annexed is a true copy from the records of this office of the letters patent granted David Zug, October 4th, 1859, No. 25697, for improvement in harvesters.

In testimony whereof I, W. H. Doolittle, acting Commissioner of Patents, have caused the seal of the Patent Office to be hereunto affixed this sixteenth day of October, in the year of our Lord one thousand eight hundred and seventy-nine, and of the Independence of the United States the one hundred and fourth.

[Seal of Patent Office, United States of America.]

W. H. DOOLITTLE,
Acting Commissioner.

807 No. 25697.

[Vignette.]

United States of America to all to whom these letters patent shall come:

Whereas David Zug, of Shaefferstown, Pennsylvania, has alleged that he has invented a new and useful improvement in harvesters, which he states has not been known or used before his application; has made affirmation that he is a citizen of the United States; that he does verily believe that he is the original and first inventor or discoverer of the said improvement, and that the same hath not, to the best of his knowledge and belief, been previously known or used; has paid into the Treasury of the United States the sum of thirty dollars, and presented a petition to the Commissioner of Patents signifying a desire of obtaining an exclusive property in the

said improvement, and praying that a patent may be granted for that purpose:

These are, therefore, to grant, according to law, to the said David Zug, his heirs, administrators, or assigns, for the term of fourteen years from the fourth day of October, one thousand eight hundred and fifty-nine, the full and exclusive right and liberty of making, constructing, using, and vending to others to be used the said improvement, a description whereof is given, in the words of the said David Zug, in the schedule hereunto annexed, and is made part of these presents.

In testimony whereof I have caused these letters to be made patent, and the seal of the Patent Office has been hereunto affixed.

Given under my hand, at the city of Washington, this fourth day of October, in the year of our Lord one thousand eight hundred and fifty-nine, and of the Independence of the United States of America the eighty-fourth.

[SEAL.] JACOB THOMPSON,
Secretary of the Interior.

Countersigned and sealed with the seal of the Patent Office.
WM. D. BISHOP,
Commissioner of Patents.

808 DAVID ZUG, of Shaefferstown, Pa.

Letters Patent No. 25697, dated Oct. 4th, 1859.

Imp't in Harvesters.

To all whom it may concern:

Be it known that I, David Zug, of Shaefferstown, in the county of Lebanon and State of Pennsylvania, have invented a new and useful improvement in combined reaping and mowing machines; and I do hereby declare that the following is a full, clear, and exact description of the construction and operation of the same, reference being had to the accompanying drawings, making a part of this specification, in which Figure 1 is an isometrical view of the entire machine, except the seats for the driver and raker and the ordinary platform, and full extension of the cutting bar and finger beam, marked 1 2; Fig. 2 shows the bearings and gearings in part; Fig. 3 is a view on the outside of the traction wheel F and the cogged driving wheel G and parts visible; Fig. 4 shows the leverage on the side of the truck, detached; Fig. 5, the curved arms and spokes on the
809 wheels F G, and their adaptation to each other; also the ratchet hub 5; Fig. 6, one of the clicks—more fully set forth in manner following, the alike parts having the same figure or letter in the several drawings, to which reference is made, viz:

The traction wheels E F are loose on the axle L, and revolve freely when the click 7 is detached from the lower and moved to the upper notch of the click catch 6 on the adjoining spoke of the wheel, and also when backing the truck the clicks do not arrest the

D. Zug. 813

Mower.

No. 25697 Patented Oct. 4, 1859.

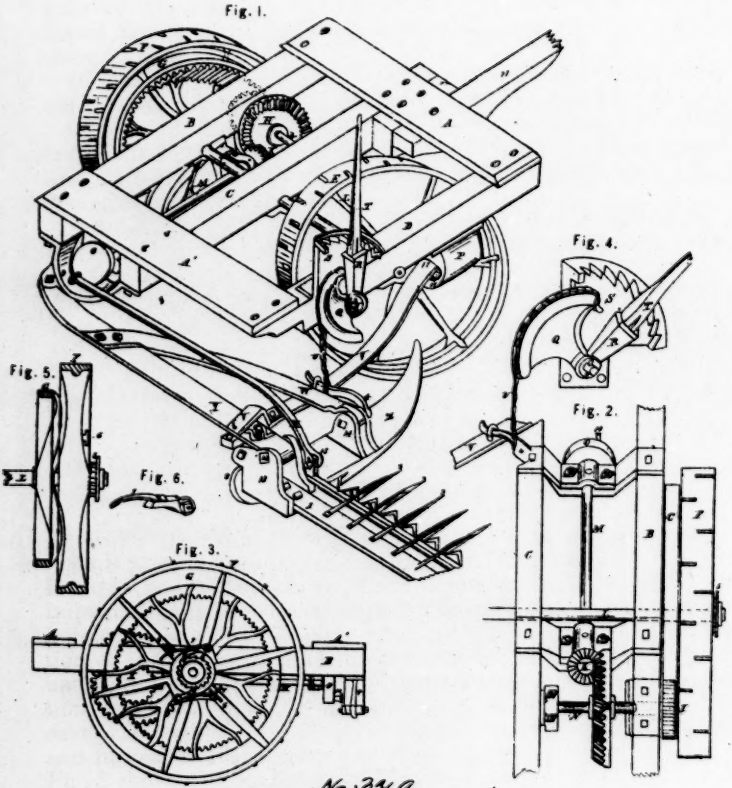

No. 379.
McCormick et al.
v.
Whitmer, Adm.r
p. 813

Witnesses.
S. G. Musser
J. Stauffer

Inventors.
David Zug

motion of the wheel, but, when down, by a forward motion, the click rests against the ratchet teeth of the hub, and thus locks the wheel, and consequently gives a rotary motion to the axle L and the driving wheel G, cogged on its inner periphery, which gives motion to the small cogged wheel I (or pinion I) outside the truck and its shaft N, on which is the bevel wheel H, geared into the beveled pinion K, which gives motion to the shaft M and its terminal wheel O, to which latter the pitman X is affixed on its outer disk and near its edge on the peg 10, operating the pitman to which
810 the cutter bar 2 is affixed at 15 (on the shoe Z), crank fashion, drawing it to and fro in its groove on the shoe and between the fingers 3 3. A semi-circular band 9, with a projecting end 16, is affixed to the truck beams B C, beneath on the rear, to which the supporting bar Y is hinged at 16, and also at 12 to the shoe Z, between the raised bearers 13, for the reception of bar 1, which supports the fingers or guards 3 3, and also the platform, when used for reaping; this supporting beam Y is braced with the piece W, hinged at 14 on the shoe Z. There is also an adjustable castor wheel 8 (not shown on the model) under the supporting bar Y, which rests on the ground at any desired elevation of the cutting bar adjustment, as in common use. The elastic spring brace V embraces the supporting bar Y at *v*, in which the bar can vibrate to adapt it to the folding over of the sickle bar 2 and finger supports 1 onto the truck when desired. The other end of the spring brace V is hinged to a bolt passing through a box, P, with a nut and screw; this bolt
811 is surrounded with thick gum-elastic within the box, being of sufficient power to retain the bolt, yielding only when the guards come in contact with any obstacle while operating, by which much damage to the machine may be prevented, the supporting bar Y being also so hinged at 16 as to allow a sufficient vibration under such circumstances. A hoisting bar, 4, hinged to 14 on the shoe and secured to the spring brace V, over which the chain U is passed at one end, while the other end is secured to the projecting point on the quadrant-like grooved lever arm Q. The lever T, in its socket R, operates in the curved or toothed quadrant S, as shown, by which lever arrangement the shoe Z, with its appendages, can be raised and lowered with ease, and retained in the desired notch.

I am aware that various devices have been employed to effect similar objects, but I am not aware of any combination substantially the same.

What I claim as my invention, and desire to secure by letters patent, is the combination of the brace V with the gum-elastic
812 stuffing box P, and the supporting bar Y, when these several parts are constructed and arranged in the manner described, for the purpose specified.

DAVID ZUG.

Witnesses present at signing:
S. G. MUSSER.
J. STAUFFER.

Ex'd: H. M. H., E. A. M.

(Here follows diagram marked p. 813.)

814 (65.)

Tag attached marked as follows: U. S. circuit, nor. dist. Illinois. Hugh Graham *vs.* Cyrus H. McCormick *et al.* 7. Def'ts' Exhibit. Ball Patent No. 25797. Jno. H. Whipple, notary public.

DEPARTMENT OF THE INTERIOR,
UNITED STATES PATENT OFFICE.

To all persons to whom these presents shall come, Greeting:

This is to certify that the annexed is a true copy from the records of this office of the letters patent granted E. Ball, dated October 18, 1859, No. 25797, for "imp't in harvesters."

In testimony whereof I, W. H. Doolittle, acting Commissioner of Patents, have caused the seal of the Patent Office to be hereto affixed this twentieth day of November, in the year of our Lord one thousand eight hundred and seventy-seven, and of the Independence of the United States the one hundred and second.

[SEAL.] W. H. DOOLITTLE,
Acting Commissioner.

815 United States of America to all to whom these letters patent shall come:

Whereas E. Ball, of Canton, Ohio, has alleged that he has invented a new and useful improvement in harvesters, which he states has not been known or used before his application; hath made oath that he is a citizen of the United States; that he does verily believe that he is the original and first inventor or discoverer of said improvement, and that the same hath not, to the best of his knowledge and belief, been previously known or used; has paid into the Treasury of the United States the sum of thirty dollars, and presented a petition to the Commissioner of Patents signifying a desire of obtaining an exclusive property in the said improvement, and praying that a patent may be granted for that purpose:

These are, therefore, to grant, according to law, to the said E. Ball, his heirs, administrators, or assigns, for the term of fourteen years from the eighteenth day of October, one thousand eight hundred and fifty-nine, the full and exclusive right and liberty of making, constructing, using, and vending to others to be used the said improvement, a description whereof is given in the words of the said E. Ball in the schedule hereunto annexed, and is made part of these presents.

In testimony whereof I have caused these letters to be made patent, and the seal of the Patent Office has been hereto affixed.

Given under my hand, at the city of Washington, this eighteenth day of October, in the year of our Lord one thousand eight hundred and fifty-nine, and of the Independence of the United States of America the eighty-fourth.

[SEAL.] JACOB THOMPSON,
Secretary of the Interior.

Countersigned and sealed with the seal of the Patent Office.

— —.

816 *The Schedule Referred to in These Letters Patent and Making Part of the Same.*

To all whom it may concern:

Be it known that I, E. Ball, of Canton, in the county of Stark and State of Ohio, have invented certain new and useful improvements in combined reapers and mowers; and I do hereby declare that the following is a sufficiently full and exact description thereof to enable those skilled in the art to make and use my said improvements, reference being had to the accompanying drawings, and to the letters of reference marked thereon, forming a part of this specification.

Figure 1, Plate I, is a top or plan view of the machine when arranged for mowing. Fig. 2, Plate I, is a side view of the same. Fig. 3 is a plan view of the outer end of the finger-beam and track-clearer. Fig. 4 is a side view of the same. Fig. 5 is a section on line A B, Fig. 1. Fig. 6 is a section showing the heel of the finger-beam and the parts attached thereto, looking in the direction of arrow 1, Fig. 1. Fig. 7 is a view of the device for throwing the gearing in and out of action. Fig. 8 is a section on line *a b*, Fig. 1; and Fig. 9 is a plan view of the seat for the raker. In Plate II of the accompanying drawings, Fig. 10 is a rear view of the machine when arranged for mowing, with the finger-beam turned up against the frame for passing from one field to another. Fig. 11 is a plan view of the reaping attachment. Figs. 12, 13, 14, and 15 are detached sections. Fig. 16 is a vertical section through the center of the coupling-arm *t*, and Figs. 17 and 18 are views of the shipping-lever and stand.

The same letters of reference refer to the same parts in all of the figures.

The main frame A is of rectangular form, and is supported upon axles *a a'* of the independent wheels B B', which turn in suitable bearings, the outer bearings, *b b'*, only being shown in the drawings.

To the inside of the wheels B B' are attached in any suitable manner gear-wheels C (see Fig. 2), having teeth or cogs on their inner surfaces to work into the teeth on small wheels *d*, which run loose on the shaft *e*, but which have ratchet-disks attached in such a manner as that when the machine is drawn forward by means of the draft-pole H pawls attached to the inside of the cases *c c'* take into their respective ratchet-teeth, and thus turn the shaft *e*, the cases *c c'* being rigidly attached to the shaft *e*. As this arrangement is similar to that described in the patent granted to John Butter and myself, December 1, 1857, no more minute description is here necessary further than it may be observed that the machine when being backed does not operate the shaft *e*.

On the center of the shaft *e* is a hub, *f''*, against which bears the hub of the gear-wheel *f*, which turns loosely on the shaft *e*, and which also gears into the wheel *g* on the crank-shaft *h*, which is supported by suitable bearings in an inclined position under the frame.

To the lower end of the crank-shaft *h* is fastened a balance-wheel, *i*, and to which the pitman-rod *k* is attached by a swiveled connection, *j*, while the other end is attached to the cutter-bar *l* at *j'*, so that as the shaft *h* revolves a reciprocating motion is imparted to the cutters *m*, which work through guard-fingers *n*, attached to the finger-bar D. The finger-bar D is fastened to a swinging plate, G, hinged to the lower end of the brace bar or plate E at *r*. There is also attached to the plate E a guide-piece, F, to keep the plate G steady as it turns on its hinge *r*, the upper end of the plate G working between shoulders on the piece F. When it is desired to fix the plate G in a rigid relative position as respects the brace-plate E the screw *s*, which works through the piece F into the plate G, is turned up, so as to hold the plate firm. To obviate the necessity, however, of taking out the screw-nut *s* every time the change is made, the piece F is provided with a slot, so that the screw-nut *s* need only be loosened sufficiently to play freely up and down in the piece F when it is desired to permit the plate G to turn on its hinge. The brace-plate E is attached to the front of the frame by a hinge-joint, as fully shown in Figs. 1 and 2.

To keep the finger-bar and cutting apparatus from being wrenched laterally, a coupling-arm, *t*, is hinged to the plate G at *u*, and to the hanger *u'* by a swivel-joint, *u''*.

To give greater strength to the brace-plate E and guide-piece F, they are connected by the truss-rod *q*, as seen in Figs. 1 and 2.

The outer end of the finger-beam D is provided with a shoe, *o*, and the shoe *o* has hinged to its rear a track-clearer consisting of two curved arms, *p p*, hinged to a common center, *p'*, and pro-
816*a* vided with a nut and bolt, *p''*, so that their outer ends can be adjusted and held in different relative positions. (See Figs. 2, 3, 4, and 10.)

To the top of the rear part of the main frame A is secured in suitable bearings a shaft, J, which has connected to its outer end a grooved pulley or wheel, J', while to its inner end is connected the lever I. A chain or rope, *b''*, is connected to the wheel J', and also to the coupling-arm *t*, as fully shown in Fig. 10. A catch-plate, *c'*, is fastened to the upper rear part of the frame, as shown in the drawings, in such relative positions as respects the fulcrum of the lever I that a pin or other suitable device attached to the lower part of said lever will catch into the holes in the plate *c'* and hold the lever in any desired position, the lever being so constructed that it can be moved laterally, so as to release the pin or catch from the plate *c'* when it is desired to change the position of the lever.

The draft-pole H is held between shoulders cast or formed on the draft-piece *v* by means of a bolt, *y*. The head of the bolt *y*, being allowed to drop into the opening *x* of the plate *w*, is then moved, together with the draft-piece *v* and pole H, laterally, so as to cause the body of the bolt *y* to move into the slot *x* in the plate *w*, when the nut on the bolt *y* is tightened, so as to hold the pole H firmly to the plate *w*, which is rigidly attached to the front of the frame A. (See Figs. 1, 2, and 8.) When it is desired to change the relative position of the pole H to adjust the draft all that is necessary to do is to

loosen the nut on the bolt *y* and move or slide the bolt, pole H, and piece *v* to the desired position, and then tighten the nut again. The plate *w* has shoulders *w'*, which fit on each side of the front piece of the frame A, while the draft-piece *v* has shoulders *v'*, which in turn fit over the sides of the plate *w*, thus rendering the draft-adjusting device both strong and simple.

The shipping-lever K is pivoted at *e'* to its standard L, which in turn is bolted to the covering or floor M, so that the forked end *e''* of the lever extends down through the floor M and works in the groove *g'* in the slotted shipper-piece *f'*, which is free to slide back and forth on the shaft *e*, but is caused to turn with the shaft *e* by means of the pin *h'*, which passes through the shaft and extends on each side thereof into the slot in the shipper-piece *f'*.

By reference to Fig. 7 it will be seen that by working the lever so as to move or slide the shipping-piece *f'* back and forth the cutters can be thrown into or out of action, at the pleasure of the driver, when the machine is being moved forward. The lever K is provided with a hole, into which fits a pin, *d'*, in the upper end of the standard L when the cutters are to be operated; but when they are to be stopped the driver takes hold of the lever and lifts it up and moves it to one side of the pin, as shown in Fig. 18.

N is the driver's seat, supported by springs N', and M' is the raker's foot-board, attached to the rear of the frame.

M'', Fig. 11, is the grain-platform, M''' the reel, M'''' the connecting-plate, and M''''' the inner reel-support, to be attached to the part F' on the brace-plate E by bolts *o'*.

Figs. 12, 13, 14, and 15 represent detached sections of the reaping attachment. As it is, however, my intention to apply for a separate patent on my improvements in the reaping attachments, they will not be more particularly described in this connection.

When mowing, the finger-beam being attached to the hinged plate G, the front of the fingers can rise and fall to a limited extent, while the rear end of the brace-plate E rests on the ground, so that the fronts of the cutters are not so liable to run into slight and sudden elevations of the ground as they would without this provision. The driver, too, by means of the lever I, can with but little effort turn up the front of the fingers at pleasure without raising either end of the finger-beam off of the ground, as shown in red, Fig. 6. When, however, it is desired to raise the finger-beam and sickle entirely off of the ground (and the front of the plate G is allowed to play up and down in the slot in the piece F), the driver has to turn the lever I, so as to draw the front of the plate G up against a stop on the top of the guide-piece F, or until the screw *s* strikes against the top of its slot, when the finger-beam can be raised entirely off of the ground, and in nearly a horizontal position, the top of the inner side of the hinged plate G coming in contact with the coupling-arm *t*, as shown in Fig. 16 at G'.

In moving the machine from field to field the finger-bar D, together with the cutting apparatus, being turned up, as shown in Fig. 10, they are held in that position by means of a hook or catch, I', on the lever I, being inserted into a slot in the track-clearer and

held firmly in place by the bolt p'', which can be moved back and forth, in connection with the arms $p\ p$, which can be moved so as to grasp firmly anything placed in the slot in which the bolt p'' works. When the finger-beam is raised into a vertical position the cutter-bar is liable to slide down onto the ground, and to prevent which I provide the coupling-arm t with a spur, k', so that the pitman-rod k will rest upon that, and thus hold the cutter-bar in place, as shown in Fig. 10.

Having described my combined reaping and mowing machine, what I claim in this patent is—

1. The hinged plate G, constructed as shown and specified, in combination with the finger-bar D and brace-plate E, substantially as described.

2. The combination of the coupling-arm t (swiveled only at the point of connection with the main frame), in combination with hinged plate G, hinged brace-plate E, and guide-piece F, substantially as set forth.

816*b* 3. The guide-piece F, in combination with the brace-rod q, hinged plate G, brace-plate E, coupling-arm t, and chain b'', substantially as described.

4. The combination and relative arrangement of spur k' with coupling-arm t and pitman k, as and for the purposes set forth.

5. The combination of the hinged plate G and adjusting-screw s with the slotted guide-piece F, hinged brace-plate E, and chain b'', arranged as and for the purposes set forth.

E. BALL.

Witnesses:
DANIEL GOTSHALL.
JACOB KEPLINGER.

(Here follow diagrams marked pp. 817 to 823, inclusive.)

824 UNITED STATES PATENT OFFICE.

STEPHEN S. BARTLETT, of Providence, Rhode Island, assignor to himself and Thomas H. Dodge, of Washington, D. C.

Improvement in Harvesters.

Specification forming part of Letters Patent No. 34545, dated February 25, 1862.

To all whom it may concern:

Be it known that I, Stephen S. Bartlett, of Providence, in the county of Providence and State of Rhode Island, have invented certain new and useful improvements in harvesters; and I do hereby declare that the following is a full, clear, and exact description, reference being had to the accompanying drawings, forming a part of this specification, in which—

Figure 1 represents a plan view of a machine embracing my said improvements. Fig. 2 represents a rear view of said machine, the

5 Sheets—Sheet 1.

E. BALL.

Combined Reaper and Mower.

No. 25,797. Patented Oct. 18, 1859.

No. 379
McCormick et al.
v.
Whitmer, Adm.
} p. 817

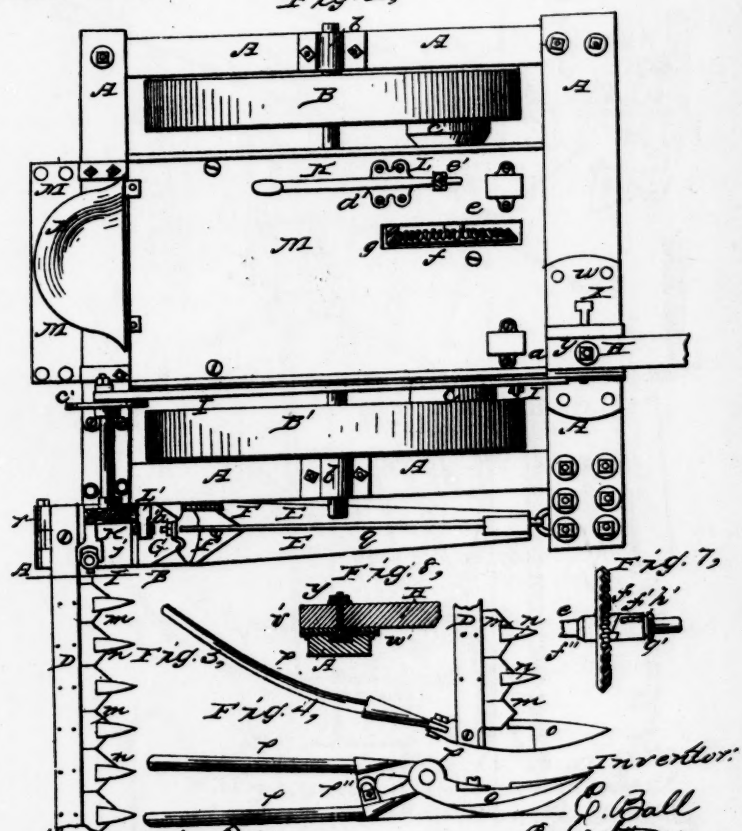

Witnesses: John E. Adams
H. C. Wilkinson

Inventor:
E. Ball
By his Attorney,
Thos. H. Dodge

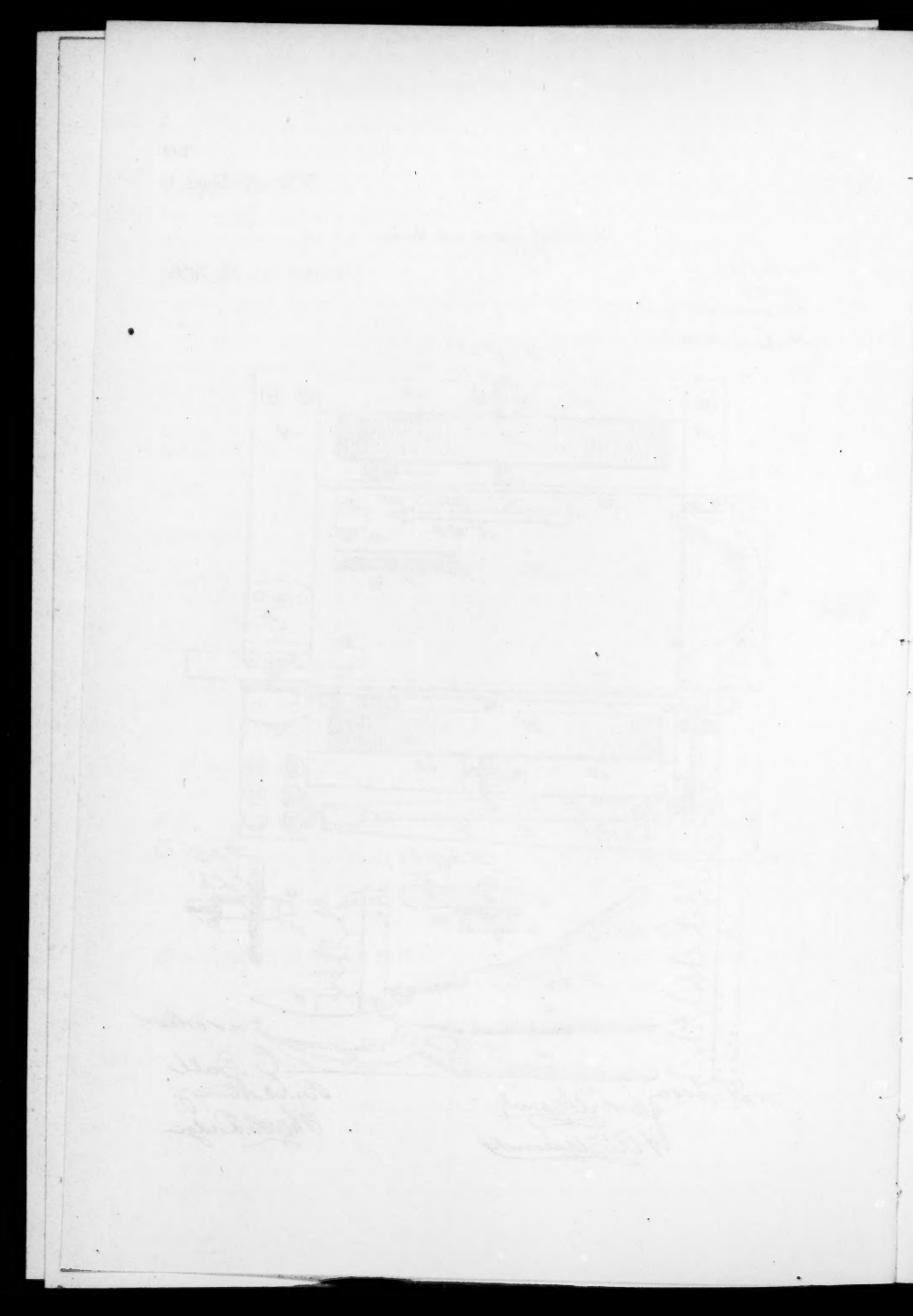

No. 379.
McCormick et al. v. Whitmer, Adm. } p. 818

5 Sheets—Sheet 2.

E. BALL.

Combined Reaper and Mower.

No. 25,797.

Patented Oct. 18, 1859.

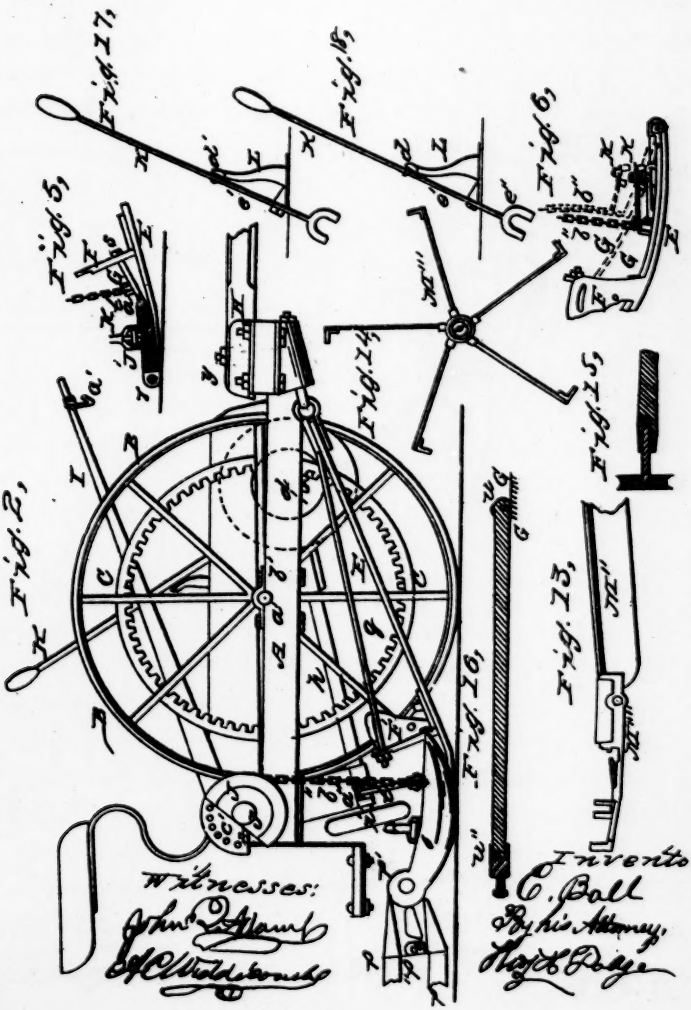

5 Sheets—Sheet 3.

E. BALL.

Combined Reaper and Mower.

No. 25,797. Patented Oct. 18,-1859.

No. 379.
McCormick et al.
v.
Whitmer, Adeur.
p. 819.

Fig. 9.

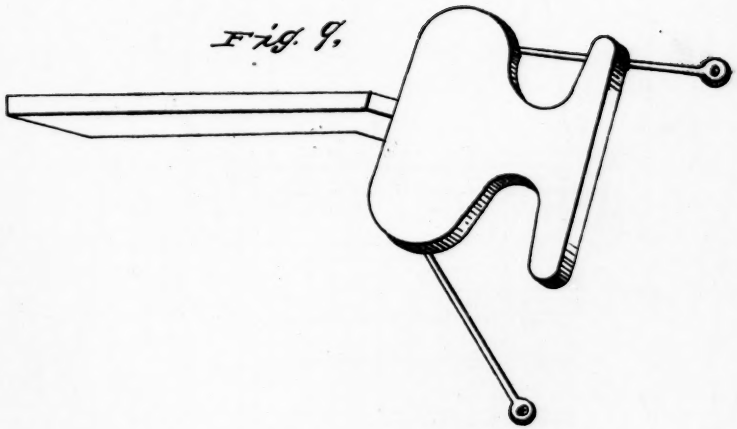

Witnesses:
John E. Adams
A. C. Widdecombe

Inventor:
E. Ball
By his Attorney,
Thos. H. Dodge

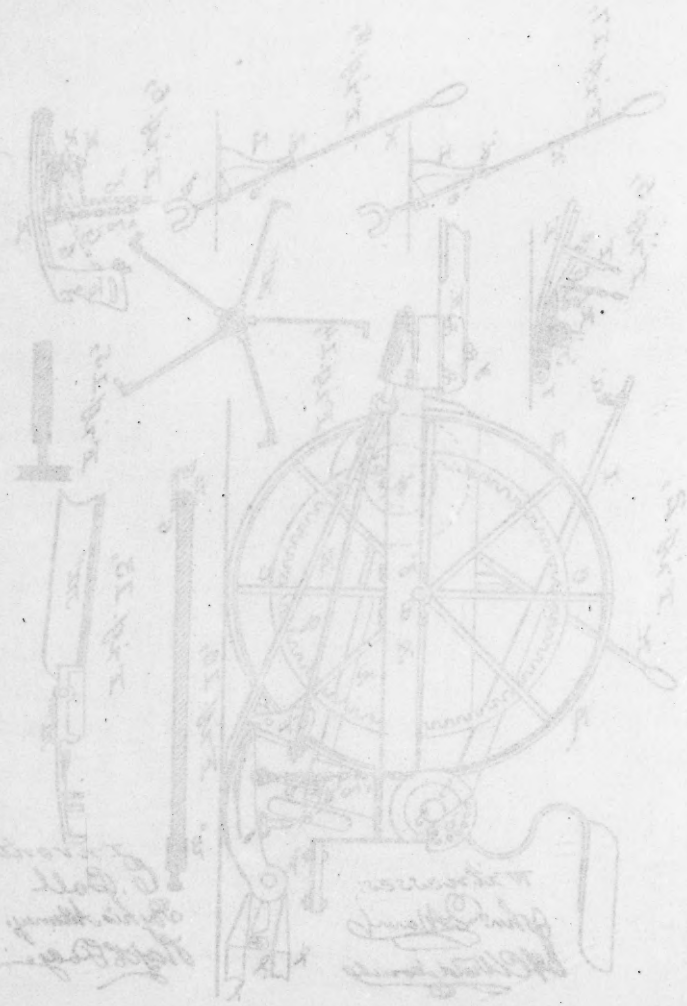

5 Sheets—Sheet 3.

E. BALL.

Combined Reaper and Mower.

No. 25,797. Patented Oct. 18,-1859.

No. 379.
McCormick et al. } p. 89.
v.
Whitmer, admr.

Fig. 9.

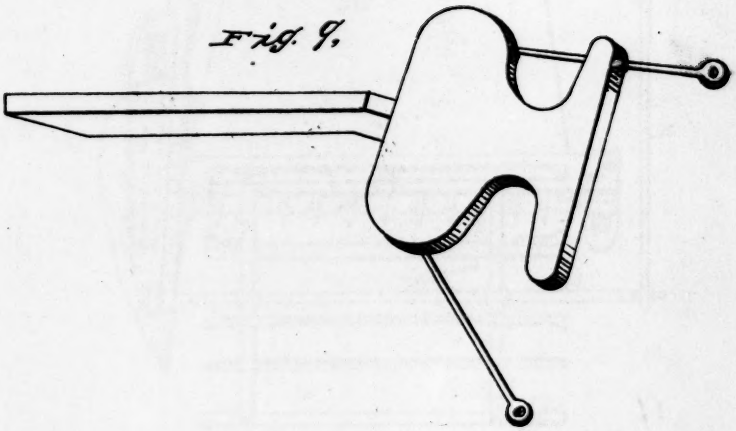

Witnesses:
John D. Adams
A. C. Wilkinson

Inventor:
E. Ball
By his Attorney:
Thos. H. Dodge

5 Sheets—Sheet 4.

E. BALL.

Combined Reaper and Mower.

No. 25,797. Patented Oct. 18, 1859.

N. 379.
McCormick et al. } p. 820
v.
Whitener, Adm.

Fig. 11,

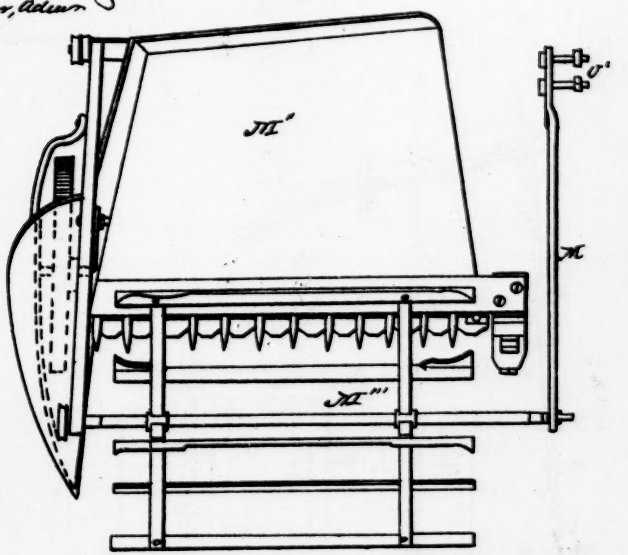

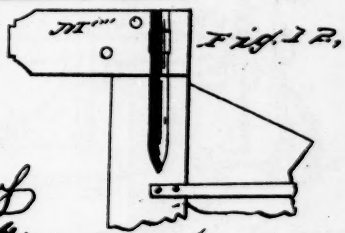

Fig. 12,

Witnesses:
John D. Adams
A. C. Wilcomb.

Inventor:
E. Ball
By his Attorney.
Thos. H. Dodge

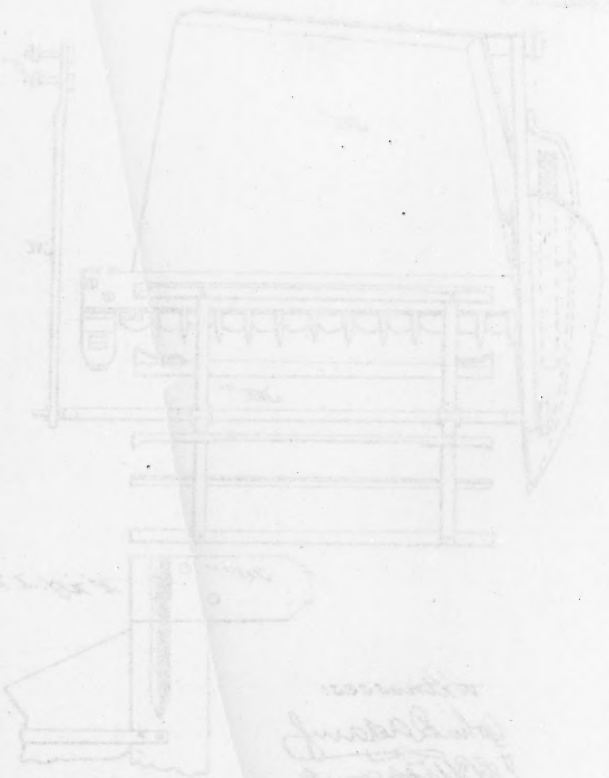

5 Sheets—Sheet 5.

E. BALL.

Combined Reaper and Mower.

No. 25,797. Patented Oct. 18, 1859.

No. 379
McCormick et al. } p. 821
v.
Whitmer, Admr.

Fig. 10,

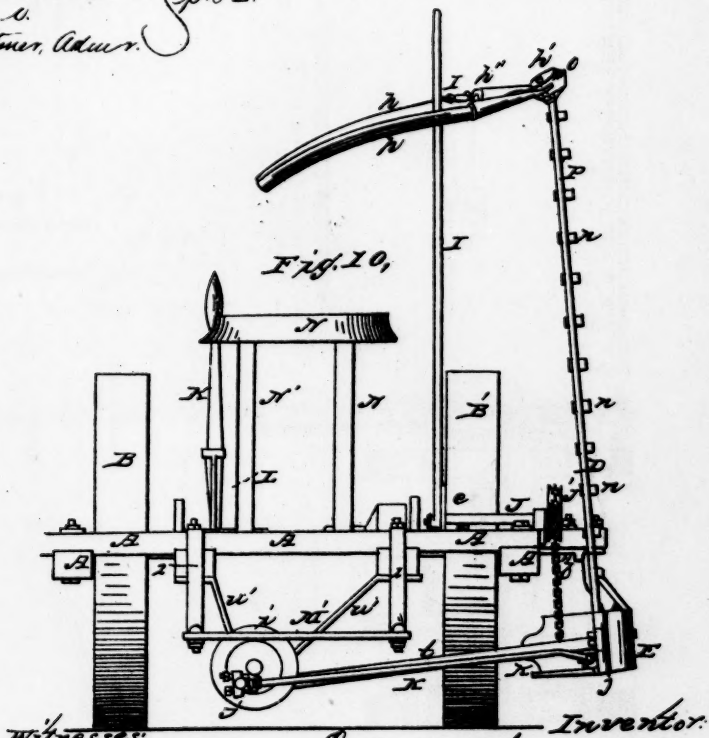

Witnesses:
John P. Adams
H. C. Whitcomb

Inventor.
E. Ball By his Attorney.
Thos. H. Dodge

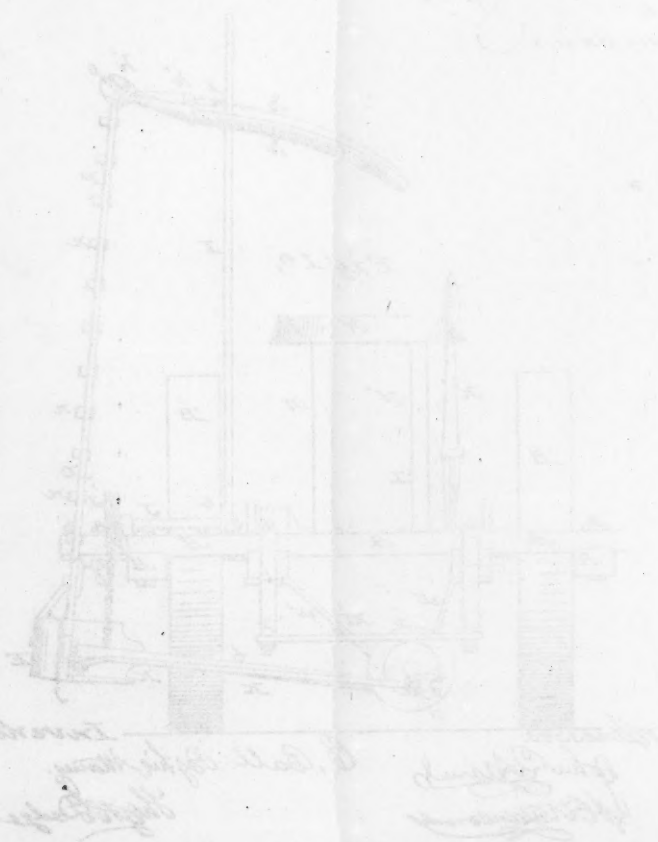

2 Sheets. Sheet 2

S. S. Bartlett,

Harvester.

No. 34,545. Patented Feb. 25, 1862.

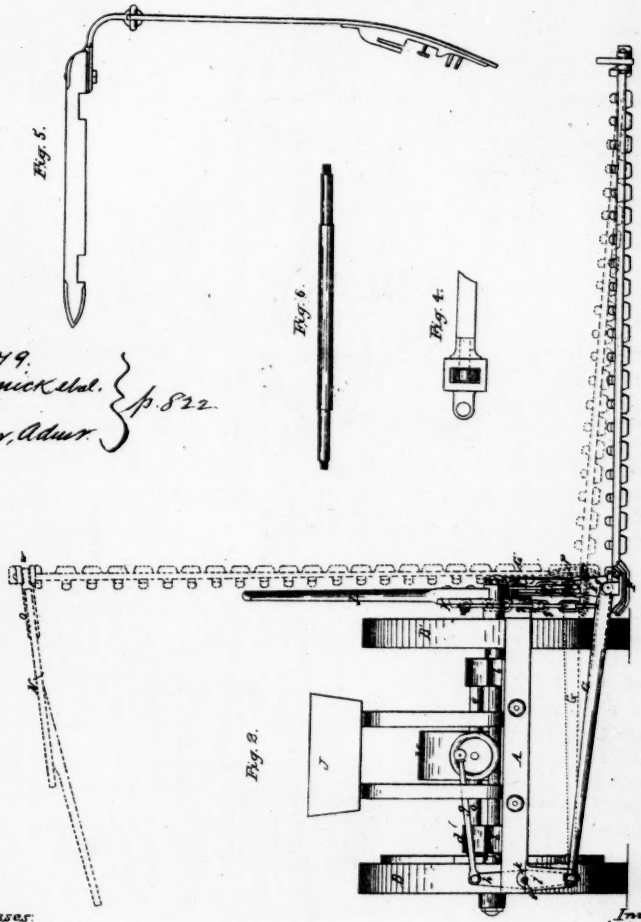

No. 379.
McCormick et al.
v.
Whitmer, Admr.
p. 822.

Witnesses:
John Pearsh
D. D. and Dodge

Inventor:
S. S. Bartlett
By his Attorney
Thos. W. Dodge
Washington D.C.

No. 379.
McCormick et al.
v.
Whitmer, Admr.
p. 823

2 Sheets Sheet 1.

S. S. Bartlett,
Harvester

No. 34,545.

Patented Feb. 25, 1862

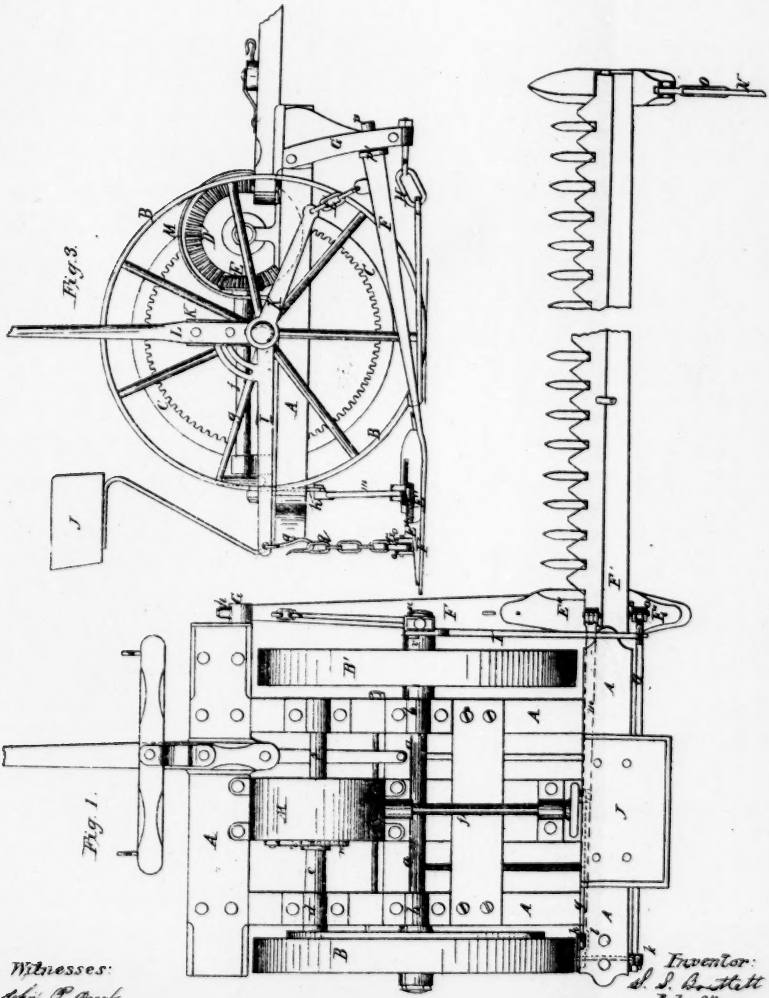

Witnesses:
John P. Gaeb
D. Dane Lodge

Inventor:
S. S. Bartlett
By his Attorney
Thos. H. Dodge

finger-beam being shown in three different positions. Fig. 3 represents a side view of the machine, the finger-beam in section; Fig. 4, a detached part in section; Figs. 5 and 6, modifications of some of the parts.

In the accompanying drawings, A A A A represents the main frame, supported by two wheels, B B′, the frame being fast on axle *a*, which turns in bearings or boxes *b b*, while the latter, B′, turns loose on the end of axle *a*. To the inside of wheel B is fast a spur-gear, C, which gears into a small spur-gear on a tubular shaft, *c*, which turns in box *d*, and on one end of shaft *e*, to the middle of which is fast a bevel-gear, D, which gears into a small bevel-gear, E, on the front end of crank-shaft *f*, which operates connecting-rod *g*, connected at its outer end to the top of a rocker-arm, *h*, fast on a spindle, *i*, which is free to turn in the upper part of the metal stand *j*, and being held therein by a nut, *k*, on its rear end. To the lower end of rocker-arm *h* is hinged the swiveled end *l* of the pitman *m*, which operates the cutter-bar and cutters.

On the inner end of tubular shaft *c* is a ratchet-wheel, *n*, into which a pawl, *n′*, on the outside of the bevel-gear D, takes, so that gear D, its shaft, and the cutters are operated only when the machine advances, the ratchet-wheel slipping under the pawl when the machine is backed.

The team is to be attached to a rigid tongue, fastened to the front of the frame, and which in the drawings is represented broken off.

The heel of the finger-beam E′ is fastened in a slot in a piece, E″, fastened on the rear top of the drag-bar F, while one end of a brace-bar, G, is hinged between ears *o o* of the piece E″. The other end of said brace-bar extends along in rear of the machine, and is fast in a wrist that turns in the lower end of stand *j*. The front end of drag-bar F is inclined upward, as seen in the drawings, and having a tubular friction-collar, *p*, which plays or works in a curved slot in a metal guide-piece, G′, fastened to the inner projecting end of the main frame. A link device, H, is fastened to the lower end of G′, and also hooked into or fastened to the rear of the drag-bar, the link device H being loose, when the machine is backed, as indicated in Fig., 3, and in which case the rear of G′ comes in contact with the collar part *p′* of *p*, but when the machine is drawn forward the link device is straightened, and the drag-bar draws back just enough to let collar part *p′* play free of G′, so that only the tubular part of *p* comes in contact with G′, thus obviating friction. The finger-beam thus connected to the main frame can rock or roll on a line at right angles to the line of motion of the machine, and also on a line parallel to the motion of the machine; or the finger-beam can rise bodily, or at either end, to conform to the inequalities of the ground over which it may be drawn, and that, too, independent of the up-and-down motion of the main frame.

In order to prevent the heel end of the finger-beam from dropping too low, and also to enable the attendant to adjust the pressure thereof on the stubble and ground, a lever, I, is hinged at its forward end by being slipped onto the end of the shaft or axle *a*, which projects beyond the hub of wheel B′ for that purpose, while the rear

end of said lever I extends back over and rests on the rear inner corner of frame A, and is provided with a hook, *q*, into which one of the links of chain *q'* can be hooked, the lower end of the chain being fastened to the brace-bar G in any suitable manner. It will thus be seen that the height of the heel of the finger-beam can be regulated at pleasure by simply changing the hook from one link to another.

For the purpose of enabling the driver from his seat J to raise the heel of the finger-beam, or to turn up the front of the guards and drag-bar, the front end of lever I is provided with a circular slot, *s*, in which works a pin projecting from the inner side of a right-angled
824½ lever piece, K, which is also loose on shaft *a*, nut *a'* on the end of shaft *a* preventing both levers from working off. The upper outer side of K is cast with a recess to receive the long arm or lever L, which is bolted or fastened thereto, while the outer arm K' extends forward, and is connected to the front of the drag-bar by a chain device, L', whereby the driver, by taking hold of the upper end of lever L and drawing it back, can elevate the front of the drag-bar to the top of the slot in the piece G', which may be of any desired height, in this case it being quite as high as the bottom side of the frame A. This arrangement provides for elevating the points of the cutters and fingers to pass over slight elevations in the ground, while the heel of the finger-beam is sustained by arm or lever I, resting on the rear of the frame. During the above operation the pin *v* moves back freely in the curved slot *s*, but when lever L is turned in the opposite direction, or forward, the pin moves back in said slot until it fetches up against its upper end, when the rear end of lever I is raised, together with the heel of the finger-beam and cutter-bar.

The chain device L' may be arranged similarly to that at the rear end of I, so that the height or elevation of the front of the drag-bar and the fingers can be adjusted for continued use on rough or very uneven ground.

M is a shield to protect the gearing.

In figure 4 the outer swiveled end of the pitman is shown on an enlarged scale.

Fig. 5 represents another mode of connecting a drag-bar to the front piece of the machine, the parts being shown turned up edgewise. In the use of this device the front piece of frame A, as shown in Fig. 1, is to be removed, together with the axle *a*, and a shorter axle (seen in Fig. 6) substituted therefor. The arrrangement of elevating-levers above described would in this last case be removed and not used.

The track-board N is fastened in a slot or recess in the metal hinged piece O, which has a knuckle, *w*, on its lower side to strike against the shoe to which O is hinged, and thus prevent the rear end of the track-board N from falling into deep holes or from hanging down too low when the finger-beam is raised. One mode of applying said improvements has now been described.

What I claim under this patent is—

1. Supporting the rear end of a drag-bar arranged to run on the

No 379.
McCormick et al. } p. 826
v.
Whitmer, Admr.

2 Sheets—Sheet 2.

J. A. DODGE.

Mower.

No. 47,807.

Patented May 23, 1865.

Fig. 3.

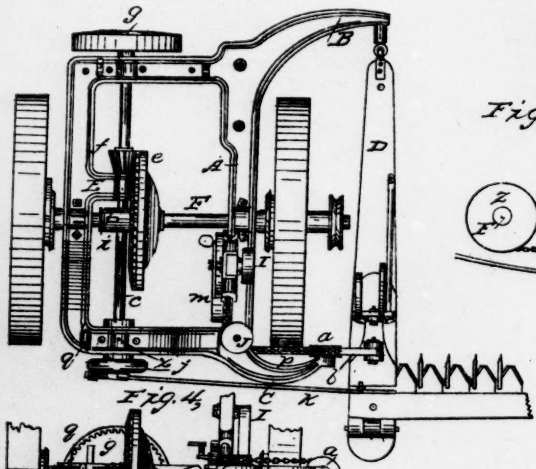

Fig. 6,

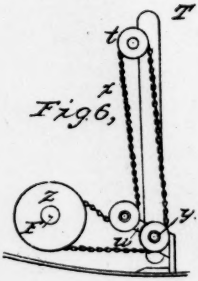

Fig. 4,

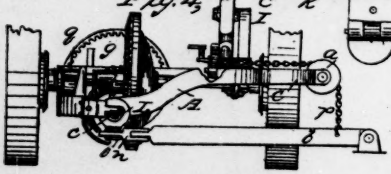

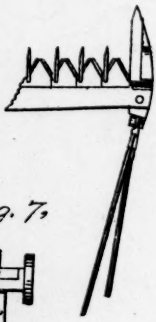

Fig. 7,

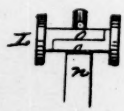

Fig. 5,

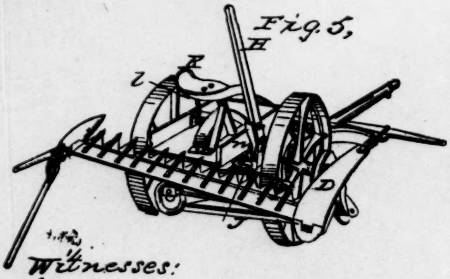

Fig. 8

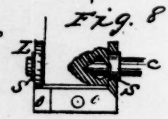

Witnesses:
J. C. Low
P. F. Dodge

Inventor
John A. Dodge
By his Atty
Smith & Dodge.

No. 379.
McCormick et al.
v.
Whitman, Admr.
p. 825.

825

2 Sheets—Sheet 1.

J. A. DODGE.

Mower.

No. 47,807.

Patented May 23, 1865.

Fig. 1,

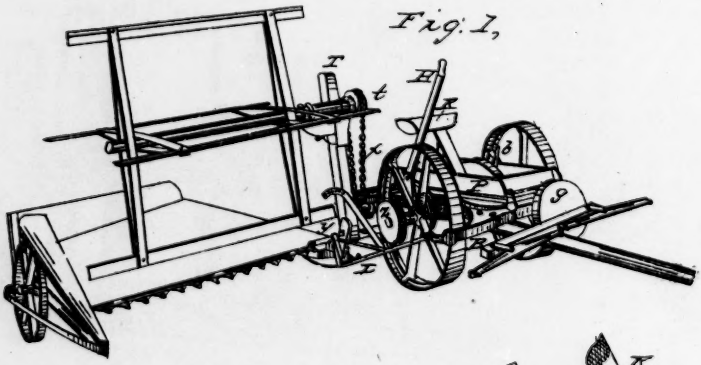

Fig. 2,

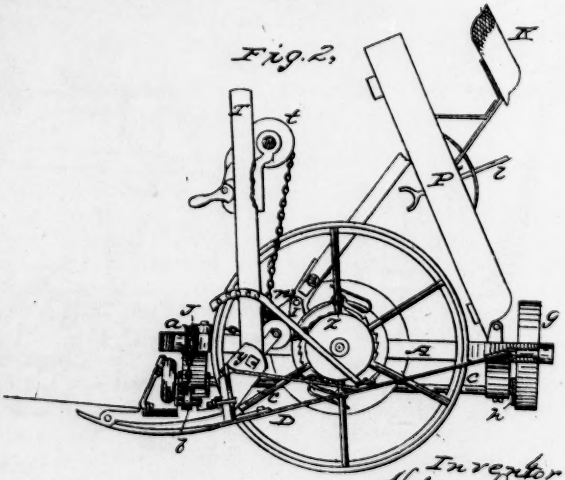

Inventor
John A. Dodge
By his Attys
Merritt & Dodge

ground at the side of the machine, with its rear end free to rise and fall by means of an adjustable arm or lever, whose front end is supported by the axle or journal of the main wheels, and on the outside of the inner wheel, substantially as described.

2. The combination, with the inner end of the axle or journal of the main supporting-wheels of a grass-harvester, of an elevating arm or lever, whereby the rear end of the hinged drag-bar can be raised and lowered, together with the heel of the finger-beam, by the driver from his seat on the machine, while the elevating arm or lever has a firm support independent of the frame, substantially as described.

3. The combination of the drag-bar and compound-lever arrangement with the main frame and finger-beam of the machine, substantially as and for the purposes set forth.

In witness whereof I have hereunto subscribed my name.

STEPHEN S. BARTLETT.

In presence of—
F. W. MINER.
M. D. DRAKE.

(Here follow diagrams marked pp. 825 & 826.)

827 UNITED STATES PATENT OFFICE.

JOHN A. DODGE, of Auburn, New York.

Improvement in Harvesters.

Specification forming part of Letters Patent No. 47807, dated May 23, 1865.

To all whom it may concern:

Be it known that I, John A. Dodge, of Auburn, in the county of Cayuga and State of New York, have invented certain new and useful improvements in mowing and reaping machines; and I do hereby declare the following to be a full, clear, and exact description thereof, reference being had to the accompanying drawings, making part of this specification, and to the letters of reference marked thereon, in which—

Figure 1 is a perspective view of my improved machine when used as a reaper. Fig. 2 is a side elevation of the machine with the platform and reel detached; Fig. 3, a top view of the machine when used as a mower; Fig. 4, a rear view with the cutter detached; Fig. 5, a perspective view of the same, showing the cutting apparatus folded over upon the frame, and Fig. 6 is side view of the self-adjusting pulley in position for operation. Figs. 7 and 8 are views of detached portions shown in detail.

The nature of my invention consists in a novel manner of constructing the main frame of the machine, and of the arrangement of the gearing in connection therewith.

It further consists in a novel arrangement of the devices for lift-

ing the cutting apparatus, and also in a self-adjusting pair of pulleys, to be used in connection with the reel.

To enable others skilled in the art to construct and use my invention, I will proceed to describe it.

A represents the main frame of my improved machine. (More clearly shown in Fig. 3.) This frame I construct of cast-iron and all in a single piece, for the purpose of making it strong, durable, and cheap, and at the same time to afford firm and reliable bearings for the operating mechanism. The body of the frame I make only about half as long again as it is wide, so as to render the machine as compact as possible, and on the inner side, at both front and rear, there is cast, in connection with the frame, arms B and C, to afford proper attachments for the cutting apparatus. In order to permit the use of a long drag-bar, D, the front arm, B, is so curved as to throw its outer end, to which the drag-bar D is attached, some distance in advance of the body of the frame, as clearly shown in Fig. 3. The rear arm, C, is also curved, as shown in the drawings, for the purpose of allowing room for the wheel of the machine in that side, and to bring its extremity in the position required to form a bearing for the pulley *a* in a line directly over the hinged brace-bar *b*. The rear left-hand portion of the frame is dropped or curved downward, as shown in Fig. 4, for the purpose of furnishing a solid bearing for the crank-shaft *c*, and dispense with the "hanger" usually applied in such cases. On the inner left-hand side of the frame a short arm, E, is located, as shown, for the purpose of forming a bearing for the rear end of shaft *d*, said arm being cast solid with the frame.

The wheels are connected to the axle F by means of ratchets and pawls, in the usual manner, so as to permit the machine to be backed and turned without interfering with the operation of the mechanism. A beveled gear-wheel, *e*, is mounted loosely on the axle F, as shown, which wheel gears into wheel *f* on shaft *d*, the front end of which shaft projects beyond the frame, and has secured thereon the internally-geared wheel *g*. Directly underneath shaft *d*, and in line therewith, is placed the crank-shaft *c*, which extends the whole length of the main frame. A pinion, *h* (shown in Fig. 2), is secured to the front end of shaft *c*, and gears into the wheel *g*, a small balance-wheel, *j*, being secured to the rear end of said shaft, the sickle G being connected thereto and operated by means of the connecting-rod *k*, in the usual manner. A sliding clutch, *i*, operated by the lever *l*, serves to connect the wheel *e* rigidly to the shaft F when it is desired to operate the mechanism. The object of this arrangement of the operating mechanism is to secure strong and unyielding bearings for the various parts, and especially to secure a long crank-shaft, whereby it is less liable to get out of line or to become injured or worn.

Upon the right-hand portion of the frame, and a short distance in rear of the axle, is located a vertical standard, I, which is cast solid with the frame A, and, like arm E, forms a part thereof. To this standard is pivoted the lifting-lever H, to the bottom of which is secured a grooved segment, *m*, of the usual form. At the rear

right-hand corner of the main frame is placed a pulley, J, working on a vertical axis, the pulley being above the frame, as shown in the drawings. On the front face, and at the outer end of arm C, is located, in a vertical plane, a similar pulley, *a*.

827½

To the front of the segment *m* is attached one end of a chain, *p*, which, after passing around and underneath said segment, extends from thence back around pulley J, from whence it passes out to and over pulley *a*, down to the brace-bar *b*, to which its end is securely attached. By this arrangement of the lifting devices I am enabled to locate the lever H midway of the frame A and on the inside of the wheel, so as to bring it within reach of the driver upon the seat K, which is placed slightly in rear of the axle of the machine, whereby he has the cutting apparatus at all times completely under his control. The fulcrum *a* is brought well out over the drag-bar D, while the lifting device is placed well forward on the frame, which permits the cutting apparatus to be folded over flat on the rear portion of the frame, or of the platform mounted thereon.

The brace-bar *b* is secured at its left-hand end to a stirrup, L, composed of the two pieces *o o*, as more clearly shown in Figs. 7 and 8. In Fig. 7 the stirrup is shown detached from its bearings, with the parts *o o* united by the journal of *n*, which extends through a hole in the under portion of the pieces *o o*. The stirrup L is mounted on the box or bearing of shaft *c* at the rear portion of the frame A, the upper half of which box is cast solid with the frame, and both parts of said box being made to project a short distance beyond the sides of the cross-piece of the frame, which projections, being turned off round and smooth, form journals for the stirrup L. By this means a strong and firm attachment is secured for the brace-bar *b*, which is thus pivoted concentrically with the crank-shaft *c*, as shown in Figs. 2, 4, and 8, in the latter of which the projecting bearings of L are indicated by *s*.

T represents a reel-post secured to the drag-bar in the usual manner. To this post the reel is attached by means of a movable clamp, and is driven by the chain *x*, which receives its motion from pulley *z* on the end of axle F of the machine, as clearly shown in Figs. 1, 2, and 6. In order to compensate for the oscillations of the pulley *t* on the end of the reel-shaft, which oscillations will be produced by the irregularities of the ground over which the drag-bar D passes, and for the purpose of keeping the chain *x* at all times taut on the pulleys *z* and *t*, a pair of pulleys are mounted in a frame, *w*, which frame is pivoted to the foot of the reel-post T on the bolt *y*, which secures said post to the drag-bar, said bolt also forming the axis of the lower pulley. The pulleys in frame *w* are thus rendered self-adjusting, and readily adapt themselves to any movement of the reel-post and consequent change in the position of the chain *x*, whereby the latter is kept at a uniform tension, and any liability to a stoppage of the rotation of the reel is thereby entirely obviated.

At the rear left-hand corner of the frame is located a short standard, *q*, as shown in Figs. 1 and 2. This standard, like that at I, is cast solid with the main frame, and is of such a length as to bring

its upper end even with the upper surface of the main frame A where the latter is not depressed. The object of this standard is to provide a support for the rear left-hand corner of the platform P, its right-hand corner resting on the frame just to the right of where it is curved downward to form the bearing for the shaft *c*.

Having thus described my invention, what I claim as new, and desire to secure by letters patent, is—

1. The main frame A when cast in one single piece, in the form and manner described.

2. In combination with the frame A, as described, the arms B and C, projecting from the front and rear inner corners, for the purpose described and set forth.

3. In combination with the frame A, the combination and arrangement of the geared wheels *e* and *f*, the geared wheels *g* and *h*, and the shafts *c* and *d*, when the shaft *c* is placed beneath the shaft *d* for the purpose of placing the pitman-wrist as nearly in line with the cutter-bar as possible.

4. In combination with the arm C and the pulleys J and *a*, the lever H, situated and operating as described.

5. In combination with the main frame of a harvesting-machine and the lifting-bar *b*, the stirrup L, as described and set forth.

6. The self-adjusting pulleys pivoted at the foot of the reel-post, substantially as and for the purpose set forth.

JOHN A. DODGE.

Witnesses:
JAMES L. DINN.
HORACE T. COOK.

(Here follows diagram marked p. 828.)

829 UNITED STATES PATENT OFFICE.

SAM'L RAY and ELI GRANT, of Alliance, Ohio.

Improvement in Harvesters.

Specification forming part of Letters Patent No. 50956, dated November 14, 1865.

To all whom it may concern:

Be it known that we, Sam'l Ray and E. Grant, of Alliance, in the county of Stark and State of Ohio, have invented certain new and useful improvements in harvesters; and we do hereby declare that the following is a full and complete description of the construction and operation of the same, reference being had to the accompanying drawings, making a part of this specification, in which—

Figure 1 is a plan view, Fig. 2 is a side view, and Fig. 3 is a view of the rear end.

Like letters of reference refer to like parts in the views.

My improvement relates to the manner of connecting the shoe of the finger-bar to the harvester, whereby the shoe with the finger-

No. 379.
McCormick et al. v. Whitmer, Adm.
p. 828

Ray & Grant, Mower.

No. 50,956.

Patented Nov. 14. 1865.

Fig. 1.

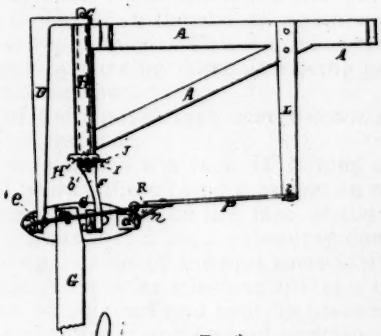

Fig. 2.

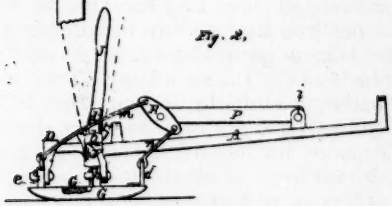

Fig. 3.

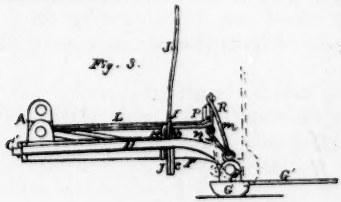

Inventor
S. Ray
E. C. Grant

Witnesses
W. H. Burrings
A. W. McClelland

bar can be tipped or inclined upward either way by a lever forming a vibrating finger-bar, and it can be turned up vertically or in a horizontal position, for the purpose of transportation.

In the several figures, A represents a frame designed to be connected to a harvester, that can be cast in one piece, at one end of which is a sleeve, B. Through this sleeve extends a shaft, C, as indicated by the dotted lines in Fig. 1, on the end of which, at C′, is placed or hung a brace, D, as represented. This brace is connected to the shoe G at the other end by curving down and being pivoted to a lug, *e*, extending up from the shoe.

F is an arm on one end of the shaft C, that curves down and is pivoted or hung to a lug, *b*, on the shoe.

Projecting upward from the sleeve B is a rack, H, formed as represented, in which a lever, J, works, there being a projection on one side of the lever, that fits into the teeth on the face of the rack. The lower end of the lever is secured to a lip, *c*, extending down below the arm F, and on the upper side of the arm there is a lip, *b*, against which a spring, I, rests that is attached to one side of the lever, whereby the lever can be adjusted and kept in place on the rack, retaining the cutting apparatus in any desired position.

L is an arm, secured to the frame A or forming a part of the frame, to one end of which is pivoted at *i* a link, P. On the end of this link is hung a lever, R, at each end of which is attached connecting-rods *m n*. The rod *m* is connected to the lug *e* at the rear of the shoe, and the rod *n* to a lug, *d*, at the front of the shoe. These rods, thus connected to the shoe, act as braces to keep the shoe in place, and at the same time allow it to be vibrated or moved to any inclination by the hand-lever J, for by means of the lever R, and link P, pivoted to the arm L, the braces can be adjusted to any position of the shoe.

As the arm F is secured to the lever J, by moving the lever as noted by the dotted lines in Fig. 2 the shoe and finger-bar can be readily adjusted to any inclination either way, for the purpose of passing over obstacles or to be adapted to the inclination of the ground.

The cutting apparatus can be turned up vertically for transportation, as indicated by the dotted lines in Fig. 3, by means of the jointed connection, as described, and it can be turned so as to fold round in a horizontal position.

The sleeve B on the shaft C may be open in the middle, if there is a bearing at each end for the shaft.

What we claim as our improvement, and desire to secure by letters patent, is—

1. The link P and lever R, in combination with the rods *m n* and shoe G, substantially as and for the purpose set forth.

2. The adjustable brace D, in combination with the shoe, constructed and arranged as and for the purpose set forth.

3. The sleeve B and brace D, in combination with the shaft C and

arm F, constructed and arranged substantially as and for the purpose set forth.

SAMUEL RAY.
ELI GRANT.

Witnesses:
W. H. BURBIDGE.
A. W. McCLELLAN.

(Here follows diagram marked p. 830.)

831 UNITED STATES PATENT OFFICE.

FRANK BRAMER, of Fabius, New York.

Improvement in Harvesters.

Specification forming part of Letters Patent No. 51546, dated December 19, 1865.

To all whom it may concern:

Be it known that I, Frank Bramer, of Fabius, in the county of Onondaga and the State of New York, have invented certain new and useful improvements in harvesting or mowing machines; and I do hereby declare that the following is a full, clear, and exact description thereof, reference being had to the accompanying drawings, and to the letters of reference marked thereon, making part of this specification, in which—

Figure 1 is a plan view; Fig. 2, a side view, and Fig. 3 a view of the driving-gear detached and enlarged.

My invention consists in a novel arrangement of the gearing and manner of mounting the same, a novel manner of securing the cutter-bar when not in use, and various other details, to be hereinafter described.

To enable others skilled in the art to construct and use my improvements, I will proceed to describe them in detail.

A represents the main frame, which is made of metal and cast in one piece and mounted centrally on the axle B, as clearly shown in Fig. 1.

A drum, C, cast hollow with an internal gear, as shown in Fig. 3, is slipped loosely on the axle B, and is secured to the frame A by means of the horizontal flange *b* at its front, and a vertical flange, *a*, at its rear edge, corresponding flanges being cast on the frame, to which the flanges *a* and *b* are bolted. In order to adjust the drum C either vertically or horizontally, thin plates or wedges are inserted between the flanges either at front or rear, as may be necessary. By this arrangement of the flanges it will be perceived that the drum C can be readily adjusted both vertically and horizontally, and thus secured in a position at right angles to the axle B, concentric therewith, which position is absolutely necessary to insure the free and perfect working of the gear.

It is obvious that by making slots in the flanges *a* and *b*, or in those to which they are bolted, or in both, the drum can be adjusted

F. BRAMER.

830

Harvester.

No. 51,546. Patented Dec. 19, 1865.

Fig. 1

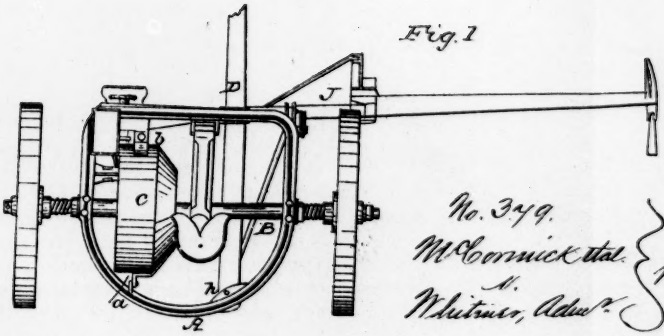

No. 379.
McCormick et al.
v.
Whitmer, Adm^r.
p. 830

Fig. 2

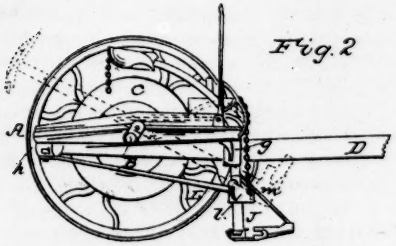

Fig. 3

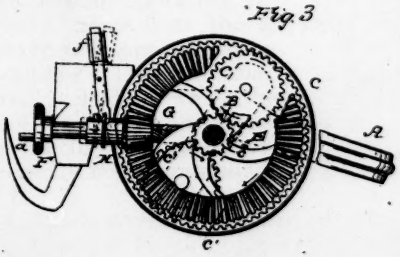

Witnesses
P. J. Dodge
Nor Burgess

Inventor
By his atty
McDodge

arm F, constructed and arranged substantially as and for the purpose set forth.

SAMUEL RAY.
ELI GRANT.

Witnesses:
W. H. BURBIDGE.
A. W. McCLELLAN.

(Here follows diagram marked p. 830.)

831 UNITED STATES PATENT OFFICE.

FRANK BRAMER, of Fabius, New York.

Improvement in Harvesters.

Specification forming part of Letters Patent No. 51546, dated December 19, 1865.

To all whom it may concern:

Be it known that I, Frank Bramer, of Fabius, in the county of Onondaga and the State of New York, have invented certain new and useful improvements in harvesting or mowing machines; and I do hereby declare that the following is a full, clear, and exact description thereof, reference being had to the accompanying drawings, and to the letters of reference marked thereon, making part of this specification, in which—

Figure 1 is a plan view; Fig. 2, a side view, and Fig. 3 a view of the driving-gear detached and enlarged.

My invention consists in a novel arrangement of the gearing and manner of mounting the same, a novel manner of securing the cutter-bar when not in use, and various other details, to be hereinafter described.

To enable others skilled in the art to construct and use my improvements, I will proceed to describe them in detail.

A represents the main frame, which is made of metal and cast in one piece and mounted centrally on the axle B, as clearly shown in Fig. 1.

A drum, C, cast hollow with an internal gear, as shown in Fig. 3, is slipped loosely on the axle B, and is secured to the frame A by means of the horizontal flange *b* at its front, and a vertical flange, *a*, at its rear edge, corresponding flanges being cast on the frame, to which the flanges *a* and *b* are bolted. In order to adjust the drum C either vertically or horizontally, thin plates or wedges are inserted between the flanges either at front or rear, as may be necessary. By this arrangement of the flanges it will be perceived that the drum C can be readily adjusted both vertically and horizontally, and thus secured in a position at right angles to the axle B, concentric therewith, which position is absolutely necessary to insure the free and perfect working of the gear.

It is obvious that by making slots in the flanges *a* and *b*, or in those to which they are bolted, or in both, the drum can be adjusted

F. BRAMER. 830

Harvester.

No. 51,546. Patented Dec. 19, 1865.

Fig. 1

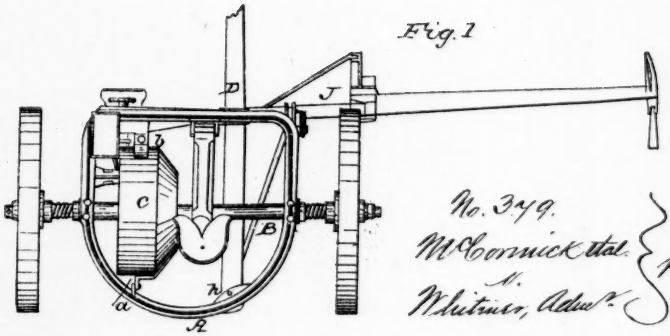

No. 379.
McCormick et al.
v.
Whitmer, Adm^r.
p. 830

Fig. 2

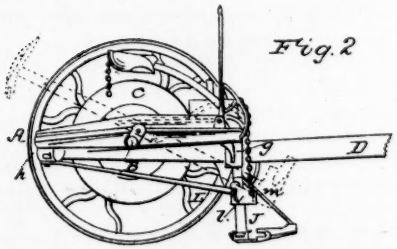

Fig. 3

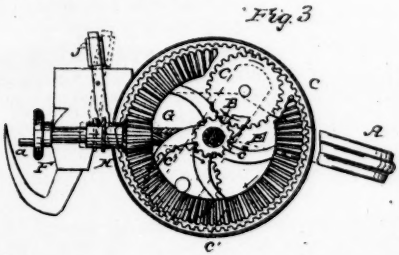

Witnesses
P. J. Dodge
Hot Burgess

Inventor
By his atty
W. Dodge

without the use of the wedges or plates, as above described; but this means of adjusting is not found to work as well in practice, for the reason that the parts are more liable to get moved out of place by the jarring of the machinery. By my plan this is entirely obviated.

Within the drum C a cross-bar, E, is rigidly secured to the axle B, and upon pins or journals protruding from the face of this cross-bar E are mounted the two planet-wheels *c* and *c'*. These wheels are of such a diameter that they will just fill the space between and gear into the internal gear of drum C on one side, and on the other into the pinion *e*, which latter, together with the bevel-gear F, are rigidly secured to the sleeve *e'*, which latter works loosely upon the axle B, as shown in Fig. 3.

Upon the shaft I, which is placed at a right angle to the axle B, and supported near its front end by a suitable bearing in the front part of the main frame A, and at its rear end by an arm cast on the frame and projecting inward for that purpose, is secured the bevel-pinion G, so located as to gear into the bevel-wheel F.

It will thus be seen that as the machine moves forward the arm E is made to revolve with the axle in the direction indicated by the red arrow, the wheels *c* and *c'* being made to rotate on their axes in the direction indicated by the black arrows while moving forward with the arms E, to which they are attached. The wheels *c* and *c'* cause the pinion *e*, and with it the bevel-gear F, to revolve, as indicated by the arrows, and as wheel F gears into pinion G, motion will be thereby imparted to it, and consequently to crank-pin *d* at the front end of shaft I, to which pin *d* the pitman or connecting-rod of the sickle is attached.

A clutch, H, sliding upon shaft I and operated by the lever *f*, serves to throw the mechanism in and out of gear at pleasure.

The tongue D passes loosely through a stirrup or box, *g*, cast for it on the under front side of frame A, as shown in Fig. 2, and is secured at its rear end in a hollow lug or projection, *h*, which is also cast on the frame for that purpose. It will be observed that by this method of attaching the tongue the line of draft is thrown below the axle, and as some chance is given for a vertical play of the tongue in the stirrup *g*, it will be seen that when the force exerted in drawing the machine is brought upon the rear attachment of the tongue at *h* it will tend to pull the rear portion of the frame down, thereby elevating the front portion, and thus relieving the animals' necks from the downward pressure of the tongue, so common in ordinary machines.

831½

I attach the push-bar L to main frame A at the same point at which the tongue is fastened, by which the power used to propel the cutting apparatus is taken from the same point where the draft is applied, and thus the frame A is relieved from the strain that would be thrown upon it if the push-bar was attached at some other point.

The swing-bar J, which unites the cutting apparatus to the frame of the machine, is attached at its upper end by a ball-and-socket joint, which permits the cutting devices to adjust themselves to the surface of the ground automatically; but, to prevent the tendency of

the front of the shoe and sickle to rise up, and to keep them down in proper position, I attach the push-bar L to the swing-bar J by means of the plate *l*, which projects upward from the top of bar J. The front end of L being pivoted at *m* above and in front of J constantly tends to push the front of the sickle down upon the ground and hold it to its work.

A slot is made in plate *l*, as shown in Fig. 2, through which a set-screw may be inserted and screwed into rod L, as indicated in red, for the purpose of rendering the shoe and cutting apparatus rigid and preventing them from having the rolling or undulating motion common to them when not thus secured. This is found to be important when the machine is used for cutting heavy clover and similar substances, but in ordinary use the set-screw is not required.

On the right-hand end of the axles and outside of the wheel is secured a metallic piece, *n*, which, being loose on the axle, can be turned up into the position shown in Fig. 2. This piece *n* has a groove in its projecting end of proper size to receive the back edge of the finger-bar when the latter is raised up and turned over back, as shown in Fig. 2. A pin passing through a hole in the piece *n*, and also in the cutter-bar, serves to secure the latter in place.

The drum C is cast with a back to it, in which a central hole is made for the axle to pass through after being secured in place. The front of the drum is closed by a wooden or thin metallic cover, by which means the gearing is all inclosed except the bevel-pinion G, and in this way the gearing is protected from injury by dust, grit, sticks, &c., which would otherwise get into it.

By this construction and arrangement of parts I am enabled to produce a machine that operates in a most perfect and satisfactory manner, it being light, easy to manage, and very desirable.

Having thus fully described my invention, what I claim as new, and desire to secure by letters patent, is—

1. The drum C, provided with the vertical flange *a*, the horizontal flange *b*, and the internal gearing, in combination with the planet-wheels *c c'*, mounted on the arm E, sleeve *e'*, provided with the pinion *e*, bevel-wheels F and G, and clutch H, all arranged and operating as herein shown and described.

2. The rest *n*, constructed as shown, and secured to the end of the axle for the purpose of holding the cutter-bar securely when folded back, as shown in red in Fig. 2.

3. The slotted plate *l*, attached to the brace-bar J, in combination with the push-bar L, having its front end pivoted at *m*, as shown and described.

4. Adjusting the drum C by means of plates or wedges inserted between the vertical flanges *a* at the rear, and between the horizontal flanges *b* at the front, either or both, as may be desired.

FRANK BRAMER.

Witnesses:
W. C. DODGE,
AUG'S JORDAN.

(Here follows diagram marked p. 832.)

McCormick & Erpelding.

Mower.

No. 61228 — Patented Jan. 15, 1867.

No. 379.
McCormick et al.
v.
Whitmer, Adm.
} p 832

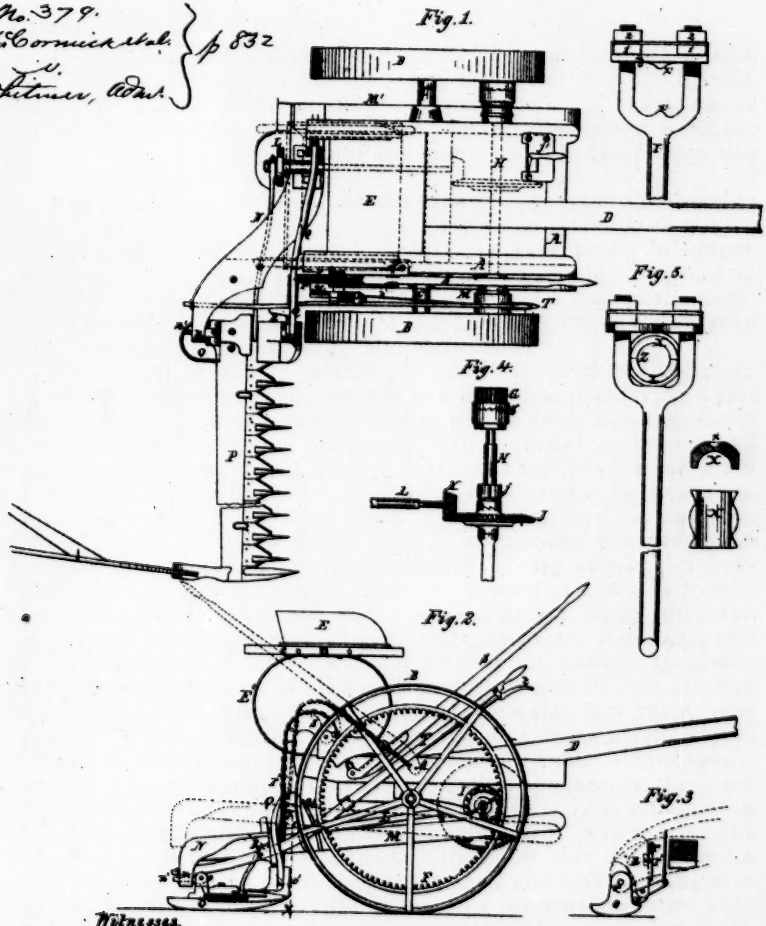

Witnesses.
J. S. Peyton.
[illegible]

Inventors.
T. J. McCormick } by their Attys.
T. Erpelding } Baldwin & Son

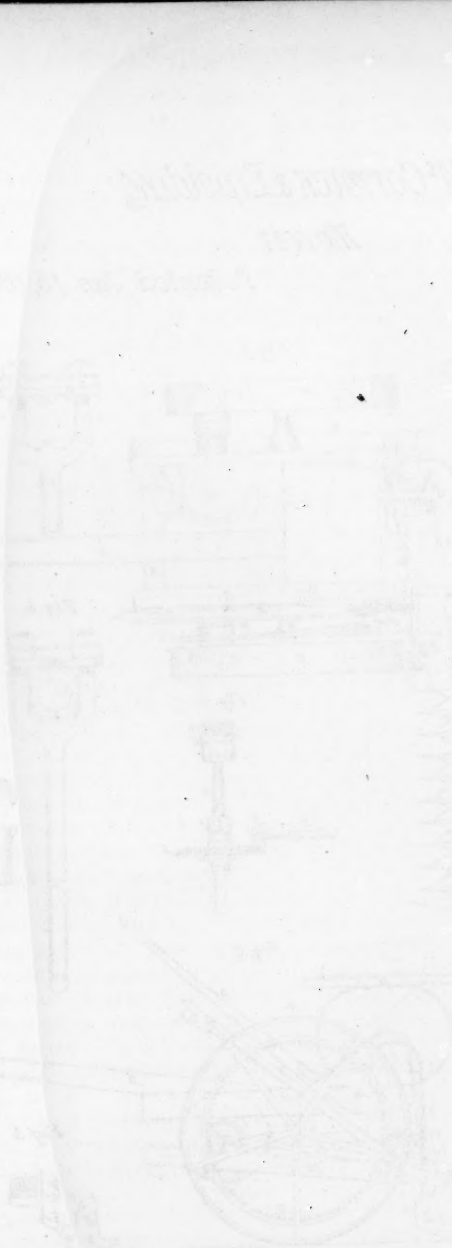

833 UNITED STATES PATENT OFFICE.

LEANDER J. MCCORMICK and LAMBERT ERPELDING, of Chicago, Illinois; said Erpelding assigns his right to said McCormick.

Improvement in Harvesters.

Specification forming part of Letters Patent No. 61228, dated January 15, 1867.

To all whom it may concern:

Be it known that we, Leander J. McCormick and Lambert Erpelding, both of Chicago, in the county of Cook and State of Illinois, have invented a new and useful improvement in harvesters, of which the following is a full, clear, and exact description, reference being had to the accompanying drawings, which make part of this specification, and in which—

Figure 1 represents a plan or top view of a harvester embracing our improvement. Fig. 2 represents a view in elevation of the inner or stubble side of the same. Fig. 3 is a view, partly in section, at the line *x x*, Fig. 2, showing the device for locking the joint at the heel of the finger-beam. Fig. 4 is a view of a part of the counter-shaft and crank-shaft detached; and Figs. 5 and 6 are views of the details of the pitman-box and connections.

Our invention relates to that class of hinge-joint harvesters in which the tongue is rigidly secured to a main frame, carrying a seat for the driver, and mounted upon two wheels, both of which act as drivers, while one end of the finger-beam is hinged to the rear end of a supplementary frame hinged to the forward part of the main frame, and capable of rising and falling freely to conform to the undulations of the ground over which it is passing; and the improvement herein claimed consists, first, in combining with the main frame balanced upon two supporting and driving wheels, and having a rigid tongue projecting from its forward end, and a driver's seat mounted upon the rear end, a supplementary frame hinged at its forward end to the main frame in advance of the main axle and in line with the counter-shaft, and having the cutting apparatus hinged to the rear end of the supplementary frame in such manner as to have both a rising and falling, and an axial movement independent of the main frame, substantially as hereinafter described; second, in combining with the supplementary frame, hinged as described, a finger-beam, pivoted at the heel of the shoe to the inner rear corner of the supplementary frame by a swiveling-joint, and at the front of the shoe to a pivoted coupling-arm passing over the supplementary frame and secured to the outer side thereof, and a rocking-lever pivoted to the supplementary frame and coupling-arm to rock the finger-beam axially; third, in a lever which serves both to lock the finger-beam and to raise it horizontally or parallel to the ground; fourth, in combining with the hinged finger-beam, a rocking-lever to rock the beam axially, and a lifting and locking-lever,

which raises the beam horizontally; fifth, in a novel mode of connecting the finger-beam to the frame.

In the accompanying drawings a stout rectangular main frame, A, is shown as supported upon two driving-wheels, B, mounted on a common axle, C. A tongue, D, is rigidly secured to and projects in front of the frame, while a seat, E, for the driver is mounted upon circular springs E′ on the rear of the frame. This seat can be moved backward and forward on the bars *e*, being provided for this purpose with horizontal slots through which a bar passes underneath the seat.

Internally-geared spur-wheels F on the driving-wheels gear into spur-pinions G on a counter-shaft, H, turning in brackets I underneath the main frame, and provided with the usual backing-ratchets *g*. A bevel-wheel, J, on the counter-shaft drives a corresponding pinion, K, on the crank-shaft L (turning in bearings on the supplementary frame), which drives the cutters by a crank and pitman in the usual way. The bevel-wheel J runs loosely on the shaft, and is thrown into and out of gear by a sliding-clutch, *j*, operated by a shifting-lever, *j′*.

Figs. 5 and 6 show the details of the pitman-box, which consists of two semi-cylindrical bearings or journals, X, within which the crank-pin *l* works. The boxes each have recesses *x* in which pivots *x′* on the pitman Y fit. The bifurcated ends of the pitman have screws cut on them. A bar, *y*, is placed on them to form the bearing for the upper box, and is held down by nuts 1. A guard-plate, *z*, is placed over these nuts and held down by screw-nuts 2. By this mode of construction the pitman is free to traverse round the crank-pin, or to turn axially to accommodate itself to the rising and falling and rolling motion of the finger-beam, and the nuts are
833½ prevented from being shaken loose by the vibration of the pitman.

The supplementary frame consists of two parallel longitudinal side pieces, M M′, connected by suitable cross-bars. The inner side piece M is longer than the other, and the two are connected by a curved metal brace or cross-piece, N, which lies upon and extends beyond the supplementary frame, and is bent down so as to form a lug, *n*, in which to pivot the hinge of the finger-beam. This piece N is formed with a flange, so as to embrace the end and top of the side piece M, to which it is firmly fastened, both by vertical and horizontal bolts, thus securing great rigidity, and preventing the rocking or twisting of the frame, the cross-piece N, the bar Q, and the shoe forming a triangular frame.

The finger-beam P is firmly secured at its inner end to a shoe, O, having upon it two lugs, *o o′*.

A rod, *n′*, is pivoted to play vertically in the rear lug *o*, while it has an axial rotation in the lug *n*, so as to allow the finger-beam to rise and fall at its outer end, and to rock axially to raise or lower the points of the guards, while it also rises and falls with the supplementary frame.

A curved coupling-arm or brace, Q, is pivoted to the front lug *o′*,

curving over the supplementary frame, and pivoted to the outer beam M. A bifurcated bracket, R, is secured to the lower end of this coupling-arm. A locking-cam, *r*, Fig. 3, plays in this bracket, and is connected by a cord or chain, *r'*, with a locking-lever, S, on the main frame, the chain passing over a crescent-shaped cam, *s*, pivoted to the frame by one horn, as shown in Fig. 2. When the toe of the locking-cam is depressed by raising lever S, it abuts against the heel of the finger-beam so as to prevent its divider end from falling below a horizontal plane when the finger-beam is raised from the ground.

The rear end of the lifting-lever T is pivoted in the lug *n*, and extends forward and upward above the main frame, within reach of the driver. The bracket R is pivoted to this lever, as well as to the coupling-arm Q, so that by raising or lowering the lever the points of the guard-finger are raised or lowered.

A spring-detent, *t*, and segment-rack, U, serve to hold the lever T in any position desired.

As the machine advances (when in operation) the supplementary frame rises and falls to conform to the undulations of the ground over which the shoe *o* passes, while the divider end of the finger-beam is free to rise and fall above or below the plane of the shoe. The driver can raise or depress the points of the guards by means of lever T. When he lifts the finger-beam, by raising lever S, the cam *r* bears against the shoe and keeps the finger-beam level while being raised by the lever. When the beam is raised to its greatest height the cam *s* is vertical, as shown in Fig. 2, and the strain being parallel with the lever, forms a self-rocking device to hold the finger-beam in its elevated position.

As the lug *n* and coupling-arm Q extend beyond and below the supplementary frame, while the lugs *o o'* extend above the shoe, the finger-beam can easily be turned up so as to rest against the frame for transportation.

What we claim as our invention, and desire to secure by letters patent, is—

1. The combination, as set forth, of the main frame, supplementary frame, and hinged and pivoted finger-beam, all constructed and arranged as described.

2. The combination of the supplementary frame, the hinged finger-beam, and the coupling-arm, with the rocking-lever, when arranged for joint operation, as described.

3. The combination of the shoe O, locking-piece *r*, and crescent-cam *s*, with the lever S, all arranged as described, for the purposes both of locking the finger-beam and lifting it longitudinally.

4. The combination, with the main and supplementary frames, of the hinged finger-beam, the locking-lever, the coupling-bar Q, and the rocking-lever, all arranged and operating as described.

5. The combination of the cross-piece N, and coupling-bar Q, with the shoe O, constructed and arranged as described.

In testimony whereof we have hereunto subscribed our names.

L. J. McCORMICK.
LAMBERT ERPELDING.

Witnesses:
C. A. SPRING, JR.
JOHN CHURCH.

(Here follows diagram marked p. 834.)

835 UNITED STATES PATENT OFFICE.

ANDREW WEMPLE, of Chicago, Illinois.

Improvement in Mowing-Machines.

Specification forming part of Letters Patent No. 61644, dated January 29, 1867.

To all whom it may concern:

Be it known that I, Andrew Wemple, of the city of Chicago, in the county of Cook and State of Illinois, have invented certain new and useful improvements in mowing machines; and I do hereby declare that the following is a full, clear, and exact description thereof, reference being had to the accompanying drawings, making a part of this specification, in which—

Figure 1 is a perspective view; Fig. 2, a section, showing a side view of the tongue and rock-shaft below the axle; Fig. 3, a similar section with front view; Fig. 4, a side view of the clamp or collar of the lever E detached; Fig. 5, a side view of the head of the cam-lever F; Fig. 6, a top view of the same, showing also the heel or projection of the finger-bar; Fig. 7, a side view of the pitman-head or wrist-pin; Fig. 8, a top view of the same; and Fig. 9, a horizontal section of the ball or center-piece of the wrist-pin.

Like letters refer to similar parts in all of the figures.

The nature and object of my invention consist in attaching a cutter-bar to the frame by a swivel-joint so located that the cutter or sickle bar, with the finger-bar, can be rocked or the fingers elevated or depressed, either by the lever attached for that purpose or of their own motion, without changing their position relative to the machine. Mowing-machines having been heretofore constructed so that the finger-bar could be rocked; but the joint has been located either above or to one side, so that when the fingers were elevated the bar was thrown forward, and when depressed thrown backward, changing the relative line so as to crowd the sickle when pressed forward and relieve it entirely when thrown back, and give the machine an unsteady motion, besides cramping either the pitman or the sickle or cutter bar; in so locating the pivots of the inner shoe of the finger-bar and the joint connecting the sickle or cutter-bar with the pitman that they will be on a horizontal line or level with the pitman-joint, central, and so near the vertical line that when in motion the pitman-joint or sickle-head will cross it, so that when the outer end of the finger-bar is elevated or depressed to any extent

A. Wemple.

Mower.

No 61644 Patented Jan. 29, 1867

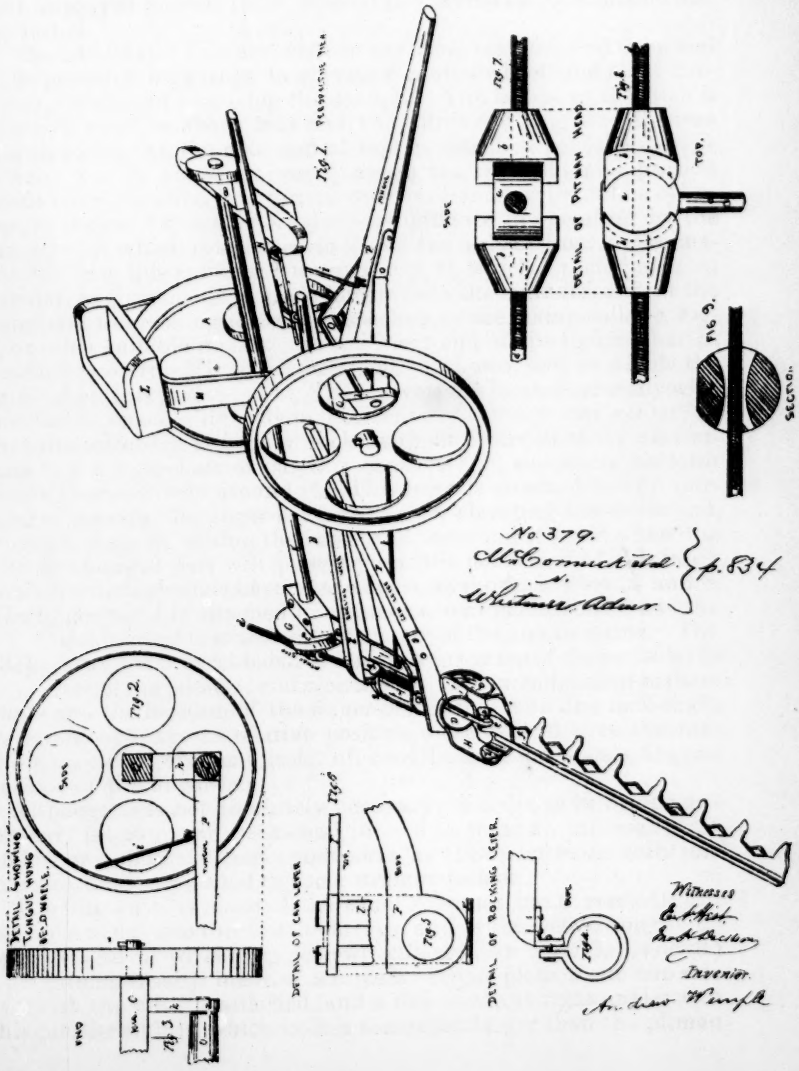

No. 379.
McCormick et al.
v.
Whitmore, Admr.
p. 834

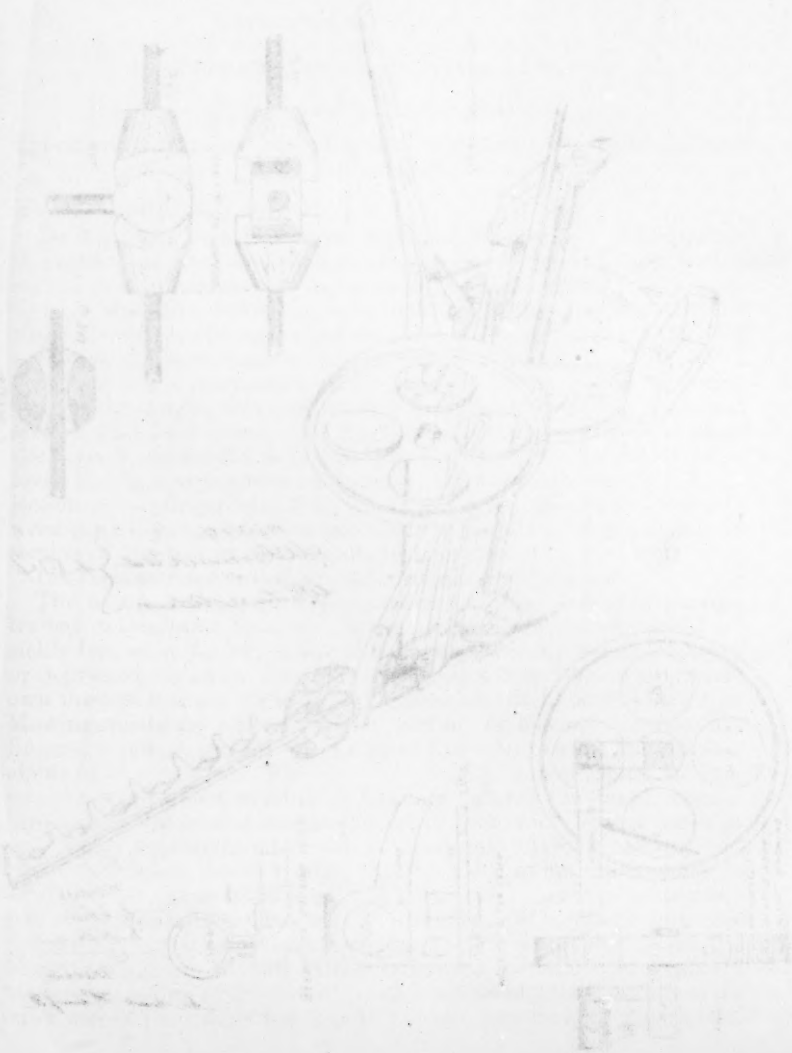

necessary in mowing there will not be any additional strain or friction; in attaching a lever to the rotating part of the swivel-joint, so that the cutter-bar can be rocked by the driver; in attaching a lever to the swivel-joint, so as to make the cutter-bar rigid, or elevate the outer end, as may be desired; and in the arrangement for hoisting or elevating the rear end of the frame when the tongue is hung below the axle.

To enable others skilled in the art to make and use my invention and improved mower, I will proceed to describe its construction and operation.

The wheels and axle are made in the usual manner, and the wheel A is provided with cogs to operate a pinion-wheel and shaft connecting with and operating the shaft K. The bed-piece B, which is made of wood, is about four and two-thirds feet long and thirteen inches wide. At the rear end of this is attached a socket-bar, C, which extends across or nearly across the rear end and projects about one-foot, when it is turned backward and formed into a cylinder, as shown. It is supported or strengthened in operation by the brace-rod *k*, which is attached to it and the axle or front of the machine. Into this cylinder I insert a bar, D, which I prefer making tubular, as shown. It is made longer than the cylinder, and at the outer end the rocking lever E is attached by the clamp-collar *g*, Fig. 4, or other suitable means. To the inner end of the rocking-bar D, I attach two arms, H, which are bent, as shown, and to which the inner shoe, I, is pivoted at *l*. These pivots are located centrally with the bar D, or on a line taken horizontally through the center, so that the cutter-bar swings or rocks without obstruction. I also attach to the rock-shaft or bar D a cam-lever, F, which in the form shown passes loosely around it. This lever is attached for the purpose of making the finger-bar rigid, or for elevating the outer end, which is done by raising the lever and throwing it back, when the cam or enlarged part will press against the portion I′ of the inner shoe, I, which extends beyond the arms, as shown in Figs. 5 and 6. The finger-bar J is attached to or made a part of the shoe I, and the sickle-bar *f* is attached to it in any of the known forms. The
835½ head *e* of the sickle-bar is attached to the top of the bar, so as to bring the pivots *ll* and *m* on a level. This arrangement of these joints and the location of the finger-bar in line with the rock-shaft, so as not to change its relative position when rocked, give the machine an easy movement under all conditions of the wheels, fingers, or ends of the finger-bar.

Although it is not absolutely necessary, in order to bring the finger-bar, pitman, and rock-shaft in a line, to make the rock-shaft hollow or tubular, I prefer that form, as it can be made with less expense, and enables me to use a straight pitman.

The pitman *d* is made of the usual size, and has a screw-thread cut on it about one-third of its length, and is screwed through the pitman-head or wrist-pin. (Shown enlarged at Figs. 7, 8, and 9.) This pitman-head is made of a circular center-piece, *a*, on one side of which the pin *c* is attached, and a hole made at right angles with this pin through it, which hole is somewhat larger than the pitman

at the center, and made flaring each way, so as to give room for the pitman to play. On each side of this piece *a* are sockets *b*, which are fitted to it, as shown. In attaching it the three pieces are placed in position, and the pitman screwed through the sockets, into which threads fitting the screw of the pitman are cut. This makes a flexible pitman-head, which will accommodate itself to any inequalities in the working of the cutter or machine without bringing the friction or strain on the pin *c*, which increases its durability. The pin *c* is inserted into the crank or wheel G in any suitable manner.

The tongue or draft-pole P, with its shaft O, is attached by means of the arms *h*, below the axle. These arms are cast, and by using a cast axle it may be bent so as to bring the tongue in the same relative position, when it will be attached by hooks and eyes or other suitable means.

In order to raise the machine for traveling, a lever, N, is attached to the bed by a hinge, *j*, and connected with the draft-pole by the rod *i*. Raising this lever will depress the front end of the bed and elevate the rear end; and the hinge *j* being bent so that the rod *i*, when the lever is elevated, will pass back of the pivot of the hinge, the lever will stand upon its rear end and hold the machine securely without any catch or fastening.

The shaft K will be made in its length and bearings to suit the driving-wheel. It will be obvious that the cutter-bars can be thrown over onto the machine when it is to be moved any distance without cutting.

In the operation of those parts which are peculiar to my machine it will be observed that the finger-bar, being in line with its connection to the body of the machine, will rock up over any ordinary hummocks or down into any ordinary inequalities of the surface of the meadows without any assistance; but in moving over boggy or stony surfaces, or those upon which ant-hills are formed, and where other machines cut through and dull the sickles, the driver can rock it over by simply lifting the lever E, which is convenient to his seat, or he can raise the outer end of the cutter by lifting the lever F; and as the pivots of the finger-bar are located in the line of motion, when the lever F is down the outer end of the cutter will follow down into cavities, and will not be disturbed in its even cutting when the wheels or shoe I pass over or into any inequalities of surface. In rocking the shaft and cutter by this method the finger-bar is not moved either backward or forward in its position relative to the machine, as is the case with all other machines which have any rocking motion.

It will therefore be seen that by this arrangement I combine in one machine all the advantages which have heretofore been considered peculiar either to a single-wheel or a two-wheel machine.

I do not confine myself to locating this arrangement of the cutter to the rear end of the machine, as, with slight modifications of the other parts of the machine, it can be located in front or other point.

Having thus fully described my invention, what I claim as new, and desire to secure by letters patent, is—

1. The hollow rock-shaft or bar D, provided with arms H, for the

purposes set forth, by means of which the position of the finger-bar and sickle relatively to the machine will not be changed when the fingers of the finger-bar are rocked up or down, substantially as specified.

2. The attachment of the finger-bar to the machine or bed B by a single swivel-joint on one side, so that the pitman can be placed in the rear of the joint or connection, and attached to the head of the sickle-bar in the centre of the circle or arc described by the finger-bar in rocking, substantially as specified and shown.

3. The location of the joint *m*, connecting the pitman with the head of the sickle or cutter bar, on a level with and between the pivots *l l* of the shoe, so as to bring it into the center of the rocking movement, and so near a line drawn from one pivot, *l*, to the other that it will cross such line in the cutting movements, so that, whether the finger bar is rocked or its end elevated or depressed, the sickle and pitman will work freely, substantially as shown and specified.

4. The lever N, when so arranged and connected by the hinge *j* that it will hold the machine in an elevated position without a catch or other appliance, in combination with the rod *i* and draft-pole, substantially as and for the purposes specified.

ANDREW WEMPLE.

Witnesses:
E. A. WEST.
JNO. H. DICKSON.

(Pages 836 to 839, inclusive, omitted in printing, per stipulation. See page 1015.)

840 (65.)

THE U. S. PATENT OFFICE.

[Vignette.]

[In pencil:] Assignment. B. H. & Peyton, $2.

To all persons to whom these presents shall come, Greeting:

This is to certify that the annexed is a true copy from the records of this office of the letters patent granted William B. and Cyrus A. Werden, dated July 23rd, 1867, No. 67041, for "improvement in harvesters."

In testimony whereof I, W. H. Doolittle, acting Commissioner of Patents, have caused the seal of the Patent Office to be hereunto affixed this fifteenth day of December, in the year of our Lord one thousand eight hundred and seventy-seven*th*, and of the Independence of the United States the one hundredth and second.

[Seal Patent Office, United States of America.]

W. H. DOOLITTLE,
Acting Commissioner.

841 No. 67041.

The United States of America to all to whom these letters patent shall come:

Whereas A. B. Graham, of Waukegan, Illinois, has alleged that he has invented a new and useful improvement in harvesters (he having assigned his right, title, and interest in said improvement to himself, William B. Werden, and Cyrus A. Werden), which he states has not been known or used before such invention; has made oath that he is a citizen of the United States; that he does verily believe that he is the original and first inventor or discoverer of the said improvement, and that the same hath not, to the best of his knowledge and belief, been previously known or used; has paid into the Treasury of the United States the sum of thirty-five dollars, and presented a petition to the Commissioner of Patents praying that a patent may be issued therefor:

These are, therefore, to grant, according to law, to the said Graham, William B., and Cyrus A. Werden, their heirs, administrators, or assigns, for the term of seventeen years from the twenty-third day of July, one thousand eight hundred and sixty-seven, the full and exclusive right and liberty of making constructing, using, and vending to others, to be used the said improvement, a description whereof is given in the schedule hereunto annexed and made a part of these presents.

In testimony whereof I have caused these letters to be made patent and the seal of the Patent Office to be hereunto affixed.

Given under my hand, at the city of Washington, this twenty-third day of July, in the year of our Lord one thousand eight hundred and sixty-seven, and of the Independence of the United States of America the ninety-second.

[L. S.] W. T. OTTO,
Acting Secretary of the Interior.

Countersigned and sealed with the seal of the Patent Office.

[Seal Patent Office, United States of America.]

T. C. THEAKER,
Commissioner of Patents.

(Here follow diagrams marked pp. 842 & 843.)

844 UNITED STATES PATENT OFFICE.

ALVARO B. GRAHAM, of Waukegan, Illinois, assignor to himself, William B. Werden, and Cyrus A. Werden.

Improvement in Harvesters.

Letters Patent No. 67041, dated July 23, 1867. The schedule referred to in these Letters Patent and making part of the same.

To all whom it may concern:

Be it known that I, Alvaro B. Graham, of Waukegan, in the county of Lake and State of Illinois, have invented a new and improved

842

Sheet 2 - 2 Sheets.

A. B. Graham.

Mower.

No. 67041 Patented Jul. 23, 1867.

No. 379.
McCormick et al
v.
Whitmer, Adm'r
p. 842

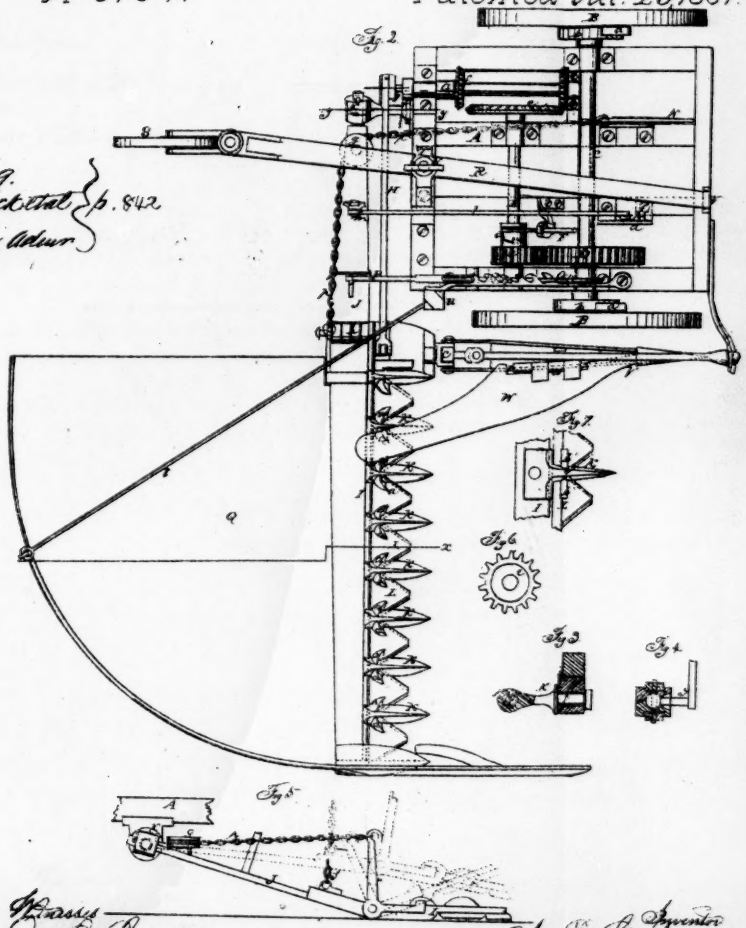

Witnesses
Jno. E. Lyons
C. L. Tyroff

Inventor
A. B. Graham
By Munn & Co.
Attorneys

841 No. 67041.

The United States of America to all to whom these letters patent shall come:

Whereas A. B. Graham, of Waukegan, Illinois, has alleged that he has invented a new and useful improvement in harvesters (he having assigned his right, title, and interest in said improvement to himself, William B. Werden, and Cyrus A. Werden), which he states has not been known or used before such invention; has made oath that he is a citizen of the United States; that he does verily believe that he is the original and first inventor or discoverer of the said improvement, and that the same hath not, to the best of his knowledge and belief, been previously known or used; has paid into the Treasury of the United States the sum of thirty-five dollars, and presented a petition to the Commissioner of Patents praying that a patent may be issued therefor:

These are, therefore, to grant, according to law, to the said Graham, William B., and Cyrus A. Werden, their heirs, administrators, or assigns, for the term of seventeen years from the twenty-third day of July, one thousand eight hundred and sixty-seven, the full and exclusive right and liberty of making constructing, using, and vending to others, to be used the said improvement, a description whereof is given in the schedule hereunto annexed and made a part of these presents.

In testimony whereof I have caused these letters to be made patent and the seal of the Patent Office to be hereunto affixed.

Given under my hand, at the city of Washington, this twenty-third day of July, in the year of our Lord one thousand eight hundred and sixty-seven, and of the Independence of the United States of America the ninety-second.

[L. S.]

W. T. OTTO,
Acting Secretary of the Interior.

Countersigned and sealed with the seal of the Patent Office.

[Seal Patent Office, United States of America.]

T. C. THEAKER,
Commissioner of Patents.

(Here follow diagrams marked pp. 842 & 843.)

844 UNITED STATES PATENT OFFICE.

ALVARO B. GRAHAM, of Waukegan, Illinois, assignor to himself, William B. Werden, and Cyrus A. Werden.

Improvement in Harvesters.

Letters Patent No. 67041, dated July 23, 1867. The schedule referred to in these Letters Patent and making part of the same.

To all whom it may concern:

Be it known that I, Alvaro B. Graham, of Waukegan, in the county of Lake and State of Illinois, have invented a new and improved

842

Sheet 2 - 2 Sheets.

A. B. Graham.

Mower.

No. 67041 Patented Jul. 23, 1867.

No. 379.
McCormick et al
v.
Whitmer, Adm'r
p. 842

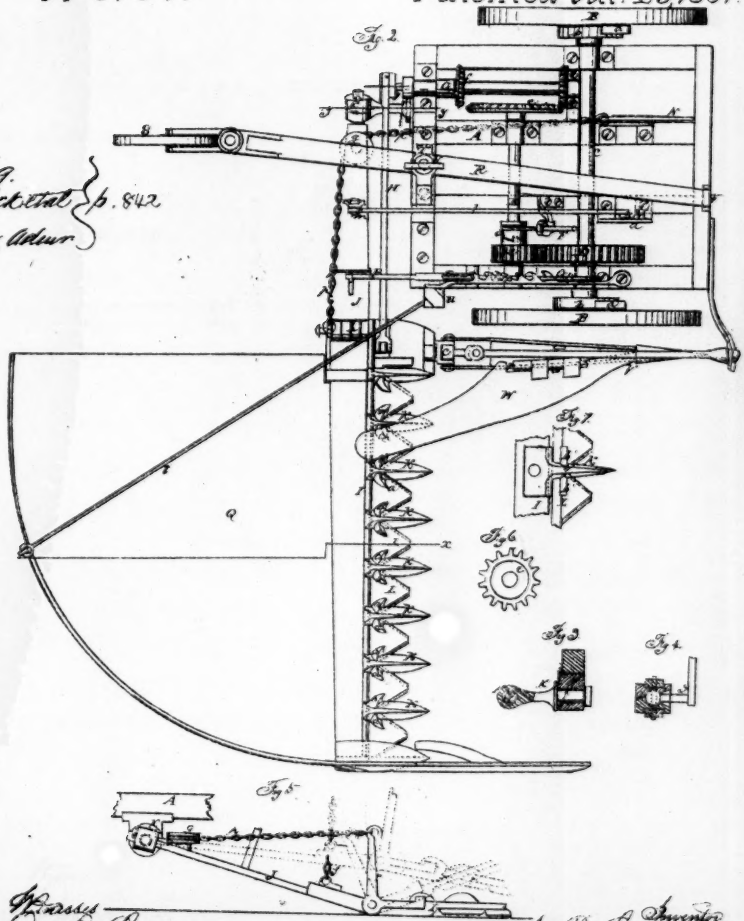

Witnesses
Jno E. Lyons
C. L. Tyroff

Inventor
A. B. Graham
By Munn & Co.
Attorneys

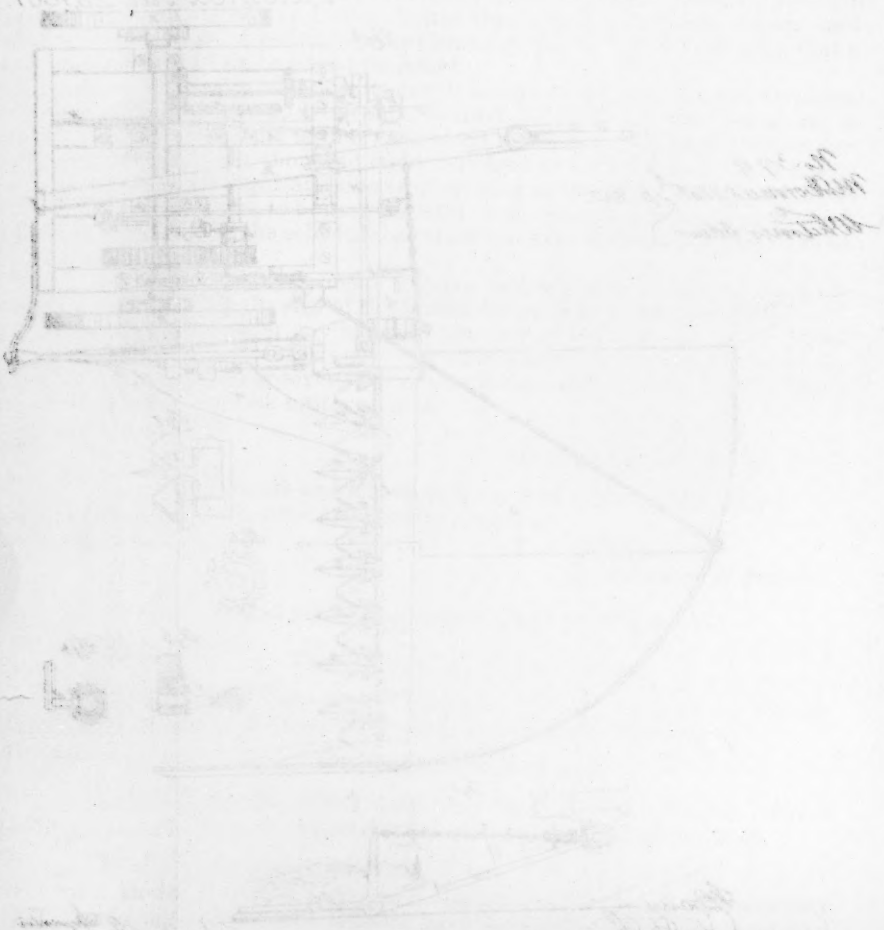

Sheet 1 - 2 Sheets.

A. B. Graham.

Mower.

No. 67041 Patented Jul. 23, 1867.

No. 379.
McConnick et al.
v.
Whitmer, Admr.
p 843

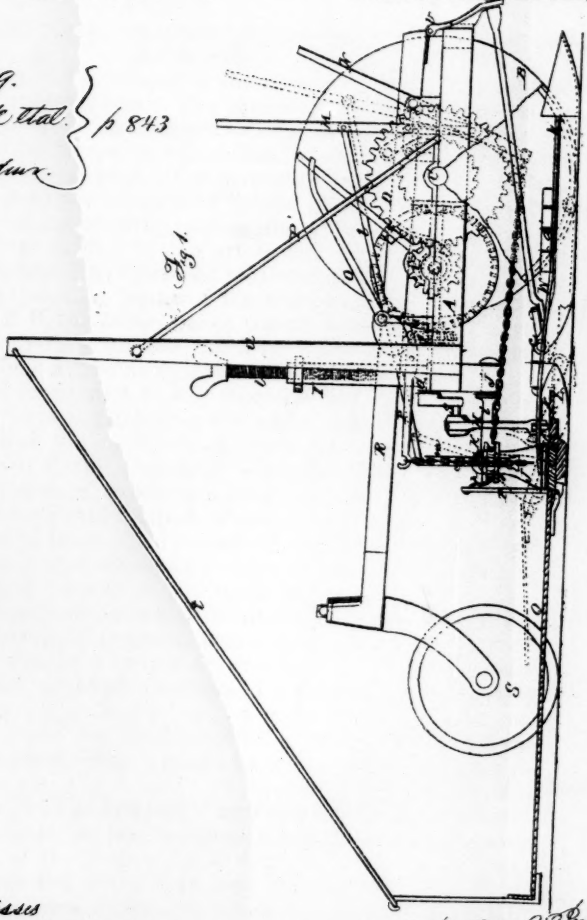

Witnesses
Jm. E. Lyon
C. L. Goff

Inventor
A. B. Graham
By Munn & Co.
Attorneys

grain and grass harvester; and I do hereby declare that the following is a full, clear, and exact description of the same, reference being had to the accompanying drawings, making a part of this specification, in which—

Figure 1 is a side sectional view of my invention, taken in the line *x x*, Fig. 2.

Figure 2, a plan or top view of the same.

Figures 3, 4, 5, 6, and 7, detached views of parts pertaining to the same.

Similar letters of reference indicate corresponding parts in the several figures.

This invention has for its object the prevention of the draw-back and consequent side draught caused in ordinary machines by the "grain-wheel," which is placed at the outer end of the finger-bar to support it and the platform. The invention has further for its object the free passage of the finger-bar over the ground, and the perfect moving of the former to adjust itself to the inequalities of surface over which it may pass. The invention has further for its object the cutting in a proper manner of lodged grass or grain, as well as the prevention of the choking or clogging of the sickle.

To enable those skilled in the art to fully understand and construct my invention I will proceed to describe it.

A represents the main frame of the machine, which is supported on two wheels B B, the latter being placed loosely on their axle C, and connected to it, when the machine is drawn forward, by the pawls and ratchets *a b*, so as to insure the rotation of the axle during the forward movement of the machine, but allowing the latter to be "backed" without rotating the axle. On the axle C there is secured a toothed wheel, D, which gears into a pinion, *c*, placed loosely on a shaft, E, and connected with the latter, when desired, by means of a clutch, *d*, to which a lever, F, is attached (see Fig. 2). This shaft E has a bevel-toothed wheel, *e*, on one end of it, which gears into a bevel-pinion, *f*, on a shaft, G, the latter having a crank, *g*, on its back end, from which the sickle is driven by a pitman, H, the latter being at the rear of the main frame A. I represents the finger-bar, the inner end of which is attached, by a joint *h*, to a bar, J, which is at the rear of the main frame A, and is connected thereto, at its left-hand side, by a swivel or universal joint, K, as shown in Figs. 2 and 3, said joint being composed of a rod, *i*, which is allowed to turn in a bearing, *j*, attached to the main frame, and the end of the bar J being cylindrical and allowed to turn in the rod *i*, as indicated by the arrows. Fig. 3, it will be seen, is a section of the joint taken in the line *y y*, Fig. 2, and this joint admits of the bar J and finger-bar I being raised vertically, and also admits of said bars being turned in a more or less inclined position in their transverse section to admit of the fingers *k* and sickle L being turned more or less down towards the ground, as may be required. This adjustment of the fingers *k* and sickle L is effected through the medium of a lever, M, which is connected by a rod, *l*, with an upright, *m*, on bar J, shown in Figs. 1 and 2. This lever M may be retained in any desired position, within the scope of its movement, by means of

a perforated bar, *n*, into the holes of which a pin, *o*, on the lever, catches. Other fastenings, however, may be employed for this purpose. The finger-bar I may be raised separately from the joint *h* as a centre through the medium of a lever, N, which, like the lever M, is attached to the main frame A, and has a chain or cord, *p*, attached to its lower end; said chain or cord passing around a pulley, *q*, on the bar J, and being attached to the upper end of an upright, *r*, attached to the finger-bar at the joint *h*. Both bars I J may be elevated simultaneously by a lever, O, which is also attached to the main frame A, and bears at its lower end on a lever, P, the outer end of which is connected by a chain, *s*, with the bar J. The lever O may be retained at any desired point, within the scope of its movement, by means of a rack-bar, P′. The grain-platform Q is attached to the back part of the finger-bar I, and is supported at its rear by a wire or rod, *t*, attached to an upright, *u*, on the main frame A. R is a bar, the front end of which is attached, by a hinge or joint, *v*, to the front end of the main frame A. This bar R extends some distance back of the main frame A, and has a caster-wheel, S, at its back end, and said bar passes through a yoke, T, on the rear part of the main frame, a screw, U, passing vertically through the top of the yoke and bearing on the bar R. By turning the screw U it will be seen that the back part of the main frame A may be adjusted higher or lower, as desired.

845 From the above description it will be seen that in case an obstruction presents itself to the inner end of the finger-bar I, the lever O is actuated in order to raise said end of the finger-bar, and if an obstruction presents itself to the outer end of said bar the lever N is actuated.

The fingers *k* have angular or oblique arms, *a′ a′*, at the back parts of their upper ends, as shown in Fig. 2, and they have arms *b′ b′* at the back parts of their lower surfaces, which arms project laterally at right angles from the fingers, as shown in Fig. 7. These arms serve to prevent the grass or straw being drawn in behind the sickle L or between it and the fingers, and therefore effectually prevent the choking or clogging of the same. This machine will work equally as well upon inclined as upon horizontal ground.

To the inner end of the finger-bar I there is attached, by a joint, *c′*, a clearer, V, which is provided with a wing, W, the latter being attached to the former by a joint, *d′*. This clearer, with its wing attached, gathers the grass or grain at the front part of the right-hand side of the main frame, and brings it within the scope of the sickle. This sickle may be of the ordinary reciprocating kind, and therefore does not require a minute description.

I do not claim the connecting of the finger-bar I to a bar, J, by a joint, *h*, for that has been previously done; but, having thus described my invention, what I do claim as new, and desire to secure by letters patent, is—

1. The clearer V, when attached to the inner end of the finger-bar I, and provided with the wing W, substantially as and for the purpose set forth.

2. The oblique arms *a′ a′*, at the upper parts of the fingers *k*, in

connection with the arms *b' b'* at their under sides, substantially as and for the purpose specified.

ALVARO B. GRAHAM.

Witnesses:
JOHN C. CLARKSON,
D. N. BARKER.

[Endorsed in pencil:] 892. Ch'cy. Graham *v.* McCormick *et al.*

846 Tag: U. S. circuit court, nor. dist. Illinois. Hugh Graham *vs.* Cyrus H. McCormick *et al.* 16. Def'ts' Exhibit File Wrapper & Patent No. 74342. Jno. H. Whipple, notary public.

Graham *vs.* McCormick. Def't- Exhibit File Wrapper & Contents to Patent No. 74342. Jno. H. Whipple, notary.

(65.)

DEPARTMENT OF THE INTERIOR,
UNITED STATES PATENT OFFICE.

To all persons to whom these presents shall come, Greeting:

This is to certify that the annexed is a true copy from the files of this office of the file wrapper, contents, and drawing in matter of letters patent granted Alvaro B. Graham, dated February 11th, 1868, No. 74342, for imp't in harvesters.

In testimony whereof I, W. H. Doolittle, acting Commissioner of Patents, have caused the seal of the Patent Office to be hereunto affixed this fifteenth day of June, in the year of our Lord one thousand eight hundred and seventy-seven, and of the Independence of the United States the one hundred and first.

[SEAL.] W. H. DOOLITTLE,
Acting Commissioner.

847 34 BEACH ST., NEW YORK, *Feb. 9th*, 1867.

Hon. T. C. Theaker, Com'r of Patents.

SIR: I have sent you the following matters appertaining to my application for imp't in harvesters, viz:

Petition and power of attorney, specification, oath, and 8 sheets of drawings.

The model has been sent by express. Enclosed herewith I send fifteen doll's (in check) to pay the patent fee.

Yours respectfully,
A. B. GRAHAM,
By his att., E. S. RENWICK.

848 To the Commissioner of Patents:

The petition of Alvaro B. Graham, of Waukegan, in the county of Lake and State of Illinois, respectfully represents that your petitioner has invented new and useful improvements in harvesting machines, which he verily believes have not been known or used prior to the invention thereof by your petitioner; he therefore prays that letters patent of the United States may be granted to him therefor, vesting in him and his legal representatives the ex-

clusive right to the same, upon the terms and conditions expressed in the act of Congress in that case made and provided, he having paid fifteen dollars into the Treasury and complied with the other provisions of said act.

Your petitioner hereby appoints, and requests you will recognize, Edward S. Renwick, of the city of New York, to be his true and lawful attorney, for him and in his name to prosecute his application for and receive the said letters patent or to withdraw the said application, to appoint such counsel or attorney to prosecute the application as he may see fit, and generally to do every act and thing which your petitioner might rightfully do to obtain said letters patent, hereby ratifying and confirming each and every act he may do for that purpose.

ALVARO B. GRAHAM.

849 To all whom it may concern:

Be it known that I, Alvaro B. Graham, of Waukegan, in the county of Lake and State of Illinois, have invented certain new and useful improvements in harvesters for reaping and mowing, and that the following is a full, clear, and exact description of my invention:

The objects of the improvements which constitute the invention set forth in this patent are to obtain a greater capacity of movement in a floating finger beam while retaining its connection with a gearing carriage that is drawn forward by a stiff tongue; to facilitate the raising and lowering of the finger beam; to improve the operation of the cutting apparatus, and to transmit motion from the gearing carriage to a reel connected with a finger beam that rises and falls independently of the gearing carriage. To these ends the first of my improvements consists of the combination of the finger beam with the gearing carriage by means of a vibrateable link (extending crosswise to the line of draught), a draught rod (extending parallel with the line of draught), and two swivel joints (the one for the vibrateable link and the other for the draught rod), so that the finger beam can rise and fall at either end and rock forward or backward independently of the gearing carriage while maintaining its connection with it.

My next improvement consists of the combination of the finger beam, gearing carriage, vibrateable link, draught rod, and swivel joints, with an arm connected with the finger beam to enable
850 it to be rocked for the purpose of setting its guard fingers at any desirable inclination to a horizontal line.

My next improvement consists of the combination of the gearing carriage, rocking finger beam, and reciprocating cutter, with a crank shaft on the gearing carriage for driving the cutter, connecting rod extending between the crank wrist of the said crank shaft and the cutter, and a swivel joint at the cutter for the connecting rod, so that the connection between the crank wrist (on the gearing carriage) and the cutter (on the finger beam) does not obstruct the rocking of the finger beam.

My next improvement has reference specially to the raising of

the grain end of a finger beam which is connected with the gearing carriage by a vibrateable link, and consists of the combination of the gearing carriage, the finger beam, and the vibrateable link (that connects the two while permitting the finger beam to move independently of the carriage) with a grain wheel that is movable in a vertical direction relatively to the finger beam, and with a lifting connection extending from the bearing of the said wheel to the gearing carriage, so that by operating upon said lifting connection the grain end of the finger beam may be raised or lowered relatively to the grain wheel, and consequently to the ground on which that wheel runs.

My next improvement has reference to the raising of both
851 ends of the finger beam in a machine in which it is free to move independently of the gearing carriage, and consists of the combination of the gearing carriage, finger beam, vibrateable link, grain wheel, and lifting connection, extending from the grain wheel (as hereinbefore specified), with a lifting chain or connection connecting the inner or stubble end of the finger beam with the gearing carriage, so that by operating the said two connections both ends of the finger beam may be raised or lowered, or by operating one or other of the said two connections the corresponding end of the finger beam may be raised or lowered without the other.

My next improvement consists of the combination of a lifting lever upon the gearing carriage with the lifting connections (connected with the finger beam and grain wheel) by means of V-formed notches that permit the lengths of the said connections to be readily adjusted by changing the links of the chains that are engaged in said V-formed notches.

[My next improvement relates to the guard fingers of the cutting apparatus, and consists in the construction

Erase. See amendm. filed Jan'y 4, '68.

of the lower member of the guard finger with an upper concave surface, so

(Page 4 referred to.) 852 that the wear of the cutter upon it tends to sharpen its outer edges, whereby the guard fingers are rendered self-sharpening.

My next improvement consists in the construction of the lower member of the guard fingers with lateral spurs to prevent the grain from passing backward along the side of the finger beyond the cutting point, this construction being a cheap one, as the spurs and finger may be cast in one piece.

My next improvement consists in the construction of the lower member of the guard finger with both a

(Page 5 referred to.)

concave upper surface and lateral spurs, so that the advantages of the two preceding improvements are combined in the same guard finger.

The object of the next improvement is to maintain the tautness of the driving belt which imparts motion from a shaft upon the gearing carriage to a reel that rises and falls independently thereof, notwithstanding such relative movement, and consists of the com-

bination of the reel arranged to move with the finger beam, the
853 gearing carriage, a radius bar connecting the reel shaft with the gearing carriage, and a belt pulley arranged at or near the axis of motion of the radius bar, so that the reel may rise or descend relatively to the carriage without materially affecting the taughtness of the belt that imparts motion to it.]*

(Page 6 referred to.)

---

854 The object of the next improvement is to prevent the casting off of the belt that imparts motion from a shaft upon the gearing carriage to a reel that moves independently thereof when the machine is passing over rough ground, and it consists of the combination of the reel arranged to move with the finger beam, the gearing carriage, a radius bar connecting the reel shaft with the gearing carriage, a guiding-belt pulley arranged upon the gearing carriage, and a second guiding-belt pulley arranged upon the radius bar. In this combination one of the said two guide pulleys directs the driving member of the belt into its proper line, while the other guide pulley directs the slack member of the belt into its proper line, so that the belt does not tend to cast itself off the driving pulley or the reel pulley.

The object of the next improvement is to ensure the free rocking of the finger beam (for the purpose of raising or depressing the points of the guard fingers) when the machine is used for reaping grain, and consists of the combination of the—

Erase & insert "A." Lines on page 7 referred to.

[raking platform with the finger beam by means of hinge connections, so that the finger beam may rock without rocking the raking platform with which it is connected.]*

The object of the next improvement is to maintain the raking platform at its proper inclination or level, notwithstanding the rocking of the finger beam with which it is connected, and it consists
855 of the combination of the raking platform of the machine with the finger beam by hinge connection and with the gearing carrriage by an upright stay and a bar or link connecting the gearing carriage and the upper end of said stay. The upright stay forming a part of this combination is by preference the inner reel post, and the bar or link is by preference the radius bar that also connects the reel with the gearing carriage, so that the said reel post and radius bar are enabled to perform duplex functions.

The object of my next improvement is to ensure the free rocking of the finger beam relatively to the raking platform, notwithstanding the support of the outer ends of the finger beam and platform by a grain wheel, and it consists of the combination of the finger beam with the grain wheel through the intervention of a hinge

---

* Words and sentences enclosed in brackets erased in original.

connection, which is by preference one of the same hinge connections which combines the raking platform with the finger beam, and the grain wheel is by preference a castor wheel.

The object of my next improvement is to enable the clutch connection between the crank of the cutter and the driving wheel to be operated with facility, and consists of the combination of the movable member of the clutch with a clutch lever composed of two parts, which are a lever proper and a yoke that engages in a groove in the said movable member.

My improvements may be embodied in a machine having the finger beam arranged in advance of the axial line of the shaft or arbor of the driving wheel or arranged in the rear of that
856 axial line. In the former case the vibrateable link that connects the finger beam with the gearing carriage will be arranged in advance of the driving wheel, and in the latter case in the rear of the driving wheel. In the former case, also, the rod hereinbefore called a draught rod (because the strain to which it is subjected is a pulling strain) becomes a pushing or thrust rod and connects the inner end of the finger beam with the rear of the gearing carriage. In the former case the radius bar for the reel and raking platform connects with the rear end of the gearing carriage, and in the latter place with its front end.

I prefer to construct a harvesting machine with the finger beam in the rear of the line of the axle of the driving wheel, and, as a description of such a machine, perfected by my improvements, will enable them to be fully understood, all of my improvements are embodied in the harvesting machine of that description which is represented in the accompanying drawings, and which is an illustration of the best mode which I have thus far devised of embodying them in a working machine.

Figure 1 represents a plan of the machine.

Figure 2 represents an elevation of the stubble side thereof.

Figure 3 represents a vertical transverse section thereof at the line *x x* of figure 1.

Figure 4 represents a similar section thereof at the line *x x* of figure 1.

857 Figure 5 represents an elevation of the grain side of the machine.

Figure 6 represents a front view of certain parts of the machine designated by the same letters as are applied to the same parts in the other figures.

Figure 7 represents a plan of a part of the finger beam with the divider used in mowing and the platform and grain-divider disconnected; and

Figures 8, 9, & 10 represent a plan and side view and cross-section of the guard fingers drawn upon a larger scale than the preceding figures; and

Figures 11 & 12 represent views of the clutch lever of the crank shaft, also drawn upon a larger scale.

This machine is what is commonly called a combined machine, and is adapted to reaping and mowing. When used for the former

purpose it is arranged as represented in figures 1 to 6; when used for the latter purpose certain of its parts are removed, as hereinafter stated, and a grass-divider is substituted for the grain-divider at the outer end of the finger beam.

The gearing which imparts motion to the sickle and reel of the machine is mounted upon a carriage, A, which is supported by two running or ground wheels B B, and is provided with a tongue, C, to which the horses are hitched. The tongue is jointed to the gearing carriage and has an arm, *c*, which projects backwards over said carriage to a standard, *c'*, mounted thereon. The standard and arm are both pierced with holes through which a bolt, c^2, is passed, by which the tongue is made fast, so that the tongue is then a stiff tongue, but the inclination of the tongue to the carriage may
858 be varied by shifting the said bolt from one hole to another in the standard *c'*, so as to vary the position of the rear end of the carriage with which the cutting apparatus is connected.

The running wheels B B, by their revolution, impart motion to the cutter and reel of the machine. To this end they are fitted to turn upon a shaft, D, with which each is connected by a spring pawl, *d*, and a ratchet wheel, d^1 (the latter secured to the shaft and the former to the running wheel), so that the running wheel that turns fastest acts as the driver. This shaft is fitted with a cog wheel, E, whose teeth engage with those of a pinion, E^1, secured to a counter-shaft, D^1, and this counter-shaft is fitted with a bevelled wheel, E^2, whose teeth engage with those of a bevelled pinion, E^3, represented in dotted lines in figure 1, that is mounted upon the crank shaft D^2, with which the cutter is connected. The hub of the pinion E^3 is fitted to turn upon the crank shaft D^2, and is connected with it by means of a saw-toothed clutch, one member (*e*) of which is arranged to slide longitudinally upon the crank shaft, but compelled to turn therewith by means of a pin or feather, while the other member of the clutch is formed upon the hub of the pinion E^3. The sliding clutch member *e* is controlled by a lever, *f*, which is composed (see figures 11 & 12) of two parts, the lever proper and a yoke, f^3, which enter a groove in the sliding clutch member *e*, and is pivotted to the frame of the machine with its upper end passing through a slotted plate, f^1, fitted with two notches, in one or other of which
859 the lever may be engaged for the purpose of holding the clutch into gear or out of gear. In the former case the crank shaft D^2 and the cutter are caused to operate as the running wheels turn; in the latter case the crank shaft and cutter, being disconnected from the running wheels, remain at rest.

The requisite lateral play of the lever to permit its engagement and disengagement is obtained by constructing it to fit loosely upon its pivot, and a spring, f^2, is coiled upon the pivot to hold the lever engaged in either notch of the slotted plate *f'*. The two parts of the clutch lever are notched and fit loosely into one another; hence the yoke can play upon the lever proper to accommodate itself to the varying positions of the lever proper and sliding clutch member. The finger beam G of the machine projects at one side of the rear end of the gearing carriage A, and is fitted with guard fingers H,

through the slots of which a scalloped cutter, I, is arranged to reciprocate endwise. The end of this cutter that is nearest the gearing carriage is connected with the crank wrist *g* of the crank shaft D^2 by means of a connecting rod, J. The finger beam is connected with the rear end of the gearing carriage in the following manner: The end of the beam nearest the carriage is provided with a shoe, K, from which lugs *a a* project upwards. These lugs are perforated to admit a joint bolt, a^1, which connects the shoe with one end of a vibrateable forked link, L, whose other end is connected by a swivel joint, M, with a bracket, N, secured to the rear of the gearing carriage.

860 This swivel joint is formed by a cross-head (*m*, Fig. 1ª), the centre of which is bored transversely to permit a journal formed on the end of the forked link L to turn in it. The ends of the cross-head *m* are formed into journals which turn in bearings upon the bracket N; thence the finger beam can both rise and fall freely at either end and rock forward and backward without twisting the link that forms its connection with the gearing carriage. Moreover, the axis of the cross-head *m* of the swivel joint is arranged in line or thereabouts with the axis of the crank shaft D^2, that imparts motion to the cutter, so that such rising and falling or rocking does not materially change the distance between the crank shaft and the cutter. The shoe K of the finger beam is connected also with the front end of the gearing carriage by a draught rod O, and the connection between the rear end of this draught rod and the said shoe is a swivel joint, M^1, of which the joint pin a^1 of the vibrateable link L is the longitudinal axis and its T head *m'* the horizontal axis. This swivel joint, therefore, while maintaining a firm connection with the draught rod, gives free play for both the longitudinal and rocking movements of the finger beam; hence when the machine is used for cutting grass the said finger beam may be left free, not only to rise and fall at either end, but also to rock or to be rocked forward and backward, so that the points of its guard fingers incline towards or from a horizontal plane.

861 In order that the finger beam may be rocked by the conductor of the machine the vibrateable link I is fitted with an arm, Z, whose upper end is connected by a rod with the lower end of a lever, P, that is pivoted to the gearing carriage near its forward end. The upper end of this lever P extends within the reach of the driver, who sits upon the driver's seat Q, so that he may rock the finger beam by moving the said lever to and fro. This rocking lever P is fitted with a spring bolt, whose end can engage in any one of a number of notches formed in a segment, R, which is attached to the gearing carriage concentrically with the pivot of the rocking lever, so that the finger beam may be fastened in the desired position by the engagement of the spring bolt in the appropriate notch. The rocking lever is fitted with a lever handle, *p*, and rod connecting with the spring bolt, by which the spring bolt may be withdrawn from the notched segment and held disengaged therefrom during the movement of the lever. In order that the connection between the cutter on the finger beam and the crank shaft on the gearing carriage may not obstruct the free rocking of the finger

beam, the connecting rod J is connected with the cutter I by means of a swivel joint, S, consisting (see Fig. 1[b]) of a head, *s*, that is pivotted to the cutter stock (by a shank that extends lengthwise therewith and turns in an ear, s^1, secured to the end of the cutter stock) and of a cross-pivot, s^2, that passes through the said head and through two ears formed upon the connecting rod J. The outer end of the finger beam is sustained by a grain wheel, T, which is pivoted to arm T^1, that projects from and is constructed to turn upon
862 an upright arbor, T^2, so that the said grain wheel operates as a castor wheel. This arbor (T^2) is secured to the frame-work V of the divider V^1. In order that the finger beam may be raised and lowered while the machine is in operation the arbor T^2 of the castor wheel is constructed to slide up and down in the hubs of the castor arm T^1, and the said arm is connected with the shorter arm of a bent hand lever, P^1, that is pivotted upon the gearing carriage by a flexible connection, consisting of a chain, *h*, rod, h^1, and a cord, h^2, the first of which passes around a sheave mounted upon the vibrateable link I, and the last of which passes around a sheave, h^3, secured in the divider frame-work V, so that the forward movement of the bent hand lever or lifting lever P pulls the divider end of the finger beam upwards and causes it to approach the hub of the castor-wheel arm T, thereby compelling it to rise from the ground. In order that the inner end of the finger beam may be correspondingly raised the vibrateable link I is provided with a chain, h^4, which is applied to the same lifting lever (P^1) as the chain leading from the outer end of the platform, and as this second chain is attached to the link near its middle, so that the finger beam is raised twice as much as the part of the link at which the attachment is made, the chain is applied to the middle of the bent arm of the lifting lever. In order that the chains may be adjusted so as to vary the position of
863 the finger beam from any required mean distance from the ground they are not made fast to the lifting lever, but are caught in V-formed notches *w* w^1, from which they can readily be removed and be as readily replaced. The lifting lever is provided with a spring bolt, which is arranged to engage in any one of a series of notches formed in a segment plate, R^1, so as to secure the lifting lever, and consequently the finger beam G, with which it is connected, in any desired position. A lever handle, p^1, also is applied to the lifting lever to control the spring bolt. The guard fingers H have a peculiar form, the upper faces of their lower members being made concave, as represented at *n*, figure 10. This construction permits the cutter or sickle to bear on the rims of the fingers, the edges of which are kept sharp by the constant attrition, so that the cutting edges of the fingers are made self-sharpening. The lower members of the fingers are also constructed with spurs, n^1 n^1, at their sides, made in one piece with them, the spurs being long enough to prevent the grain or grass from passing backwards along the side of the finger into the notches of the scollopes of the cutter, but not so long as to meet and form a continuous bearing, which would involve the necessity of fitting their adjacent ends accurately to each other. This mode of preventing the backward passage of the material being

cut is an improvement upon that in which the effect is produced by riveting a long bar to the under members of the fingers, as it involves less expense in construction. The raking platform W of the
864 machine (when grain is to be harvested) is attached to the finger beam G. The reel V, is supported by this platform so as to move with the finger beam when it is raised or lowered. The gudgeon of the outer end of the reel is received in one of a series of holes formed in a reel-bearer, X, which projects forward from a short reel post, Y, secured to the platform at its outer rear corner. The reel-beares is pivotted at its rear end to the head of this reel post, and is provided with a toothed plate, Y, which engages in the spaces between the teeth of a segment, Y^2, secured to the reel post. The segment has a curved slot in it, through which a bolt is passed, which also passes through the reel-bearer so as to hold the toothed plate and bearer to the segment. The inclination of the reel-bearer may be varied for the purpose of raising or lowering the outer end of the reel by slacking the nut of the bolt and engaging the toothed plate with others of the spaces between the teeth of the segment Y^2. The shaft of the reel is supported at its inner end by a reel post, X^1, erected upon the inner forward corner of the platform. The reel shaft is fitted with a belt pulley, *z*, to which a round belt, *q*, is applied to cause it to revolve. This belt is put in motion by being applied to a second belt pulley, Z^1, that is secured to the shaft D of the running or ground wheels B B. In order that the taughtness of the belt may not be materially affected by the change in the position of the reel, due to its movement with the finger beam and platform rela-
865 tively to the gearing carriage, the bearing *r* of the inner end of the reel shaft, although supported by the inner reel post X^1, is connected with the forward end of the gearing carriage by a radius bar, X^2, so as to maintain its distance therefrom, although it rise and fall, and the belt *q*, instead of being conducted directly from the pulley Z^1, on the driving shaft D, to the reel pulley Z, is conducted forward and backward to and from two supplementary belt pulleys $z\ z^1$ that are located at or near the pivot *i* that connects the radius bar X^2 with the gearing carriage, one pulley, *z*, being pivoted to the gearing carriage and the other, z^1, to the radius bar. As these pulleys are for all practical purposes substantially at the centre of movement of the reel, in rising and falling with the radius bar, such movement does not materially affect the belt *q*, and the latter retains its taughtness, while the rising and descent of the reel is not affected by the transmission of power to it.

On the other hand, the pulley *z*, located upon the gearing carriage, maintains always the same relation to the driving pulley Z^1, and therefore guides the driving member of the belt properly to that pulley, notwithstanding the change of position of the reel caused by the unequal rising or descent of its two ends, while the other pulley, z^1, being located on the radius bar X^2, maintains the same relation to the reel pulley Z, however the reel and the said pulley may vary its position relatively to the gearing carriage, and therefore guides the slack member of the belt properly to the reel
866 pulley, notwithstanding its change of position; hence the pulleys $z\ z^1$ are guide pulleys to guide the belt properly and

thereby prevent it from being cast off by the movement of the reel with the finger beam in passing over uneven ground.

Another and equivalent arrangement of the belt and pulleys for maintaining the taughtness of the belt (but not for preventing the casting of it off the pulleys) is represented at figure 3*a*; in this case the radius bar X^3 is pivoted upon a counter-shaft, D^3, which is carried by the gearing carriage and is fitted with a pulley, *z*, from which the belt *q* proceeds to the pulley *z* on the reel shaft. The counter-shaft D^3 on the gearing carriage may be caused to revolve by a belt encircling pulleys secured to the shaft of the running wheels and this counter-shaft, or in any other convenient manner.

The inner end of the reel may be set more or less forward of the finger beam by shifting its bearing, *r*, forward or backward on the radius bar, and the radius bar X^2 is pierced with a series of holes, to which the bolt that holds the bearing *r* of the reel shaft may be transferred when that bearing is shifted forward or backward. The inner end of the reel may be raised or lowered by turning the radius bar X^2 up or down on its pivot *i*, and the reel post X^1 is pierced with a series of holes, to one of which the bolt that holds the radius bar to it may be transferred when that radius bar is turned to a different position. In order that the finger beam may be rocked to depress or raise the points of the guard fingers when the ma-
867 chine is used for reaping grain, the raking platform W is not attached rigidly to the finger beam, but is attached to it by hinges g^4 g^4 (Fig. 1), so that the finger beam may be rocked while the platform retains its position, and the platform is retained in its proper position by being connected with the gearing carriage by the inner reel post X^1 and radius bar X^2, which thus act as stay and link to hold the platform in addition to supporting the reel; and, in order that the inner reel post may so operate, its lower end is firmly connected with the raking platform W by a metal shoe (x^4). The rocking of the finger beam independently of the raking platform W is ensured by the connection of the castor or grain wheel T with the said platform, so that the said wheel is combined with the finger beam through the intervention of the hinge or hinges g^4, which combine the platform with the finger beam; hence the rocking of the finger beam is not prevented by its combination with a raking platform or a grain wheel, but is under the control of the driver, who effects it by means of the rocking lever P, as may be found expedient to cut the grain at a greater or less distance from the ground or to raise up lodged grain. Moreover, as the weight of the outer half of the platform is sustained by the grain wheel instead of by the finger beam, the latter is relieved from much strain and is not so apt to vibrate or spring as it otherwise would be. When the machine is to be used for cutting grass the reel V, radius bar X^2, and platform W, with the reel supports, divider frame, and castor wheel T, are removed from the finger beam
868 G, and a small grass-divider with a track-clearer is bolted to the outer end of the finger beam in the place of the outermost finger, as represented at V^2, figure 7. The rocking of the finger beam is then under the control of the driver, who effects it

by means of the rocking lever P, as may be found expedient, to conform to the surface over which the cutter is passing.

When used for reaping grain the grain-divider V^1 (figure- 1, 4, & 5), which projects laterally beyond the end of the finger beam, gathers in a mass of standing grain wider than the breadth of the cutting apparatus, and the grain at the stubble side is correspondingly gathered in by a grain guard, V^3, that is supported by the inner reel post X^1, and consequently moves up and down with the platform and cutting apparatus. When the machine is used for cutting grass the grass-divider V^2, being at the end of the finger beam, gathers in no more grass than the cutting apparatus can advantageously cut, and the swarth is narrower than when cutting grain. When the machine is used for reaping the driver sets upon the seat Q and the raker upon the end of the spring frame Q^1, with his feet resting on a removable foot board, Q^2, which is detached from the machine when the machine is used for mowing.

Having thus described a machine embodying all my improvements, I declare that I do not limit my new combinations to the particular forms represented in the drawings, but intend to vary the form and construction of the members of the combinations,
869 or to use equivalent members in their places, as circumstances may render expedient. What I claim as my invention, and desire to secure by letters patent, is the

Insert. as set forth, combination, ∧ in a harvester, of the finger beam

Erase & insert. with the gearing carriage by means of [a] ∧ the vibrateable link, ∧ the draught rod, and ∧ the M & M, two swivel joints, ∧ so that the finger beam may both rise and fall at either end

Erase. and rock forward and backward [substantially as set forth].*

Insert. as set forth, I also claim the combination, ∧ in a harvester, of the

Insert. vibrateable finger beam, gearing carriage, ∧ link, draught rod, swivel joints, and arm, by which the rocking of the finger beam

Erase. is controlled [substantially as set forth].*

Insert. as set forth, I also claim the combination, ∧ in a harvester, of the

Insert. vibrateable link, gearing carriage, rocking finger beam, ∧ reciprocating cutter, crank shaft on the gearing frame, connecting rod

A. B. G. (connecting said crank shaft with the cutter on the rocking

Erase. finger beam), and swivel joint at the cutter [substantially as set forth].*

I also claim the combination, in a harvester, of the gearing carriage, finger beam, vibrateable link, grain wheel, and lifting connection for the grain end of the finger beam, substantially as set forth.

---

* Words and sentences enclosed in brackets erased in original.

Insert. I also claim the combination, as set forth, ∧ in a harvester, of the gearing carriage, finger beam, vibrateable link,

Insert. 870 grain wheel, lifting connection and lifting connections ∧ for the inner or stubble end of the finger beam, so that each end of the finger beam may be raised or lowered relatively to the gearing carriage—

[substantially as set forth.

Erase. I also claim the combination of the lifting lever with the lifting connections connected with the finger beam and grain wheel by means of V-formed notches, substantially as set forth.

I also claim the guard finger constructed with the upper surface of its lower member concave, substantially as set forth.

I also claim the guard finger constructed with lateral spurs upon its lower member, substantially as set forth.

I also claim the guard finger constructed with both a concave upper surface and lateral spurs upon its lower member, substantially as set forth.

I also claim the combination of a reel connected ∧ arranged to move with the finger beam, by a reel post ∧ the gearing carriage, radius bar, and belt pulley at or near the axis of motion of the radius bar, substantially as set forth.]*

---

871 I also claim the combination of the reel arranged to move with the finger beam, the gearing carriage, radius bar, and two guide-belt pulleys for the driving and slack members of the reel belt, one of said guide pulleys being arranged upon the gearing carriage and the other upon the radius bar, substantially as set forth.

[12. I also claim the combination of the raking platform with the

Erase & insert "B." finger beam by means of hinge connections, substantially as set forth.]*

---

13. I also claim the combination of the raking platform, finger beam, hinge connections, gearing carriage, upright stay, and link, substantially as set forth.

14. I also claim the combination, as set forth, ∧ of the finger beam with the grain wheel and platform ∧ through the intervention of a hinge con-

Erase. nection [substantially as set forth].*

15. I also claim the combination of the movable member of the clutch (for throwing the cutter crank out of or into gear) with a clutch lever composed of two parts connected by notches, substantially as set forth.

---

* Words and sentences enclosed in brackets erased in original.

872 In witness whereof I have hereto set my hand this twen*tieth*-eighth day of January, A. D. 1867.

ALVARO B. GRAHAM.

Witnesses:
D. N. BARKER.
GEO. W. DRIVER.

873 STATE OF ILLINOIS, } ss:
County of Lake, }

On this 28th day of January, A. D. 1867, before the subscriber, a justice of the peace in and for the said county, personally appeared the within-named Alvaro B. Graham and made solemn oath that he does verily believe that he is the original and first inventor or discoverer of the before-described improvements in harvesters, for which he solic-ts a patent, and that he does not know or believe that the same were ever before known or used, and that he is a citizen of the United States.

ALVARO B. GRAHAM.

Subscribed and sworn to before me this 28th day of January, A. D. 1867.

JOHN E. CLARKSON, *J. P.*

[5. J. E. C., Jan. 28, 1867. 5.]

Ex: J. A. M.

874 34 BEACH ST., NEW YORK, *March 4th*, 1867.

Hon. T. C. Theaker, Com'r of Patents.

SIR: You will oblige me by returning the specification of the application for imp'ts in harvesters filed by me Feb. 11th, 1867, for the correction of a clerical error.

Respectfully, y'r ob't serv't,

A. B. GRAHAM,
By his att'y, E. S. RENWICK.

875 DEPARTMENT OF THE INTERIOR,
UNITED STATES PATENT OFFICE,
WASHINGTON, *M'ch 7th*, 1867.

SIR: Agreeably to your request of the 4th inst., the specification of your application for letters patent is herewith returned.

Yours respectfully,

—— ——,
Commissioner of Patents.

A. B. Graham, Esq., care E. S. Renwick, 34 Beach St., N. Y.

876 34 BEACH ST., NEW YORK, *Mar. 9th*, 1869.

Hon. T. C. Theaker, Com'r of Patents.

SIR: I herewith return the papers of A. Graham's application filed Feb. 11th, having made the clerical am*m*endments proposed.

Respectfully, ob'd't serv't,

A. B. GRAHAM,
By his att., E. S. RENWICK.

877 U. S. PATENT OFFICE,
WASHINGTON, D. C., *July 29th*, 1867.

Alvaro B. Graham, Esq., care E. S. Renwick, 34 Beach St., New York.

SIR: Please find below the decision of the examiner in charge in the matter of your application for patent for alleged improvement in harvesters, filed Feb. 11th, 1867.

Very respectfully,

—— ——,
Commissioner.

EXAMINER'S ROOM No. 18.

The application above referred to has been examined and it is found that the 1st clause of claim is anticipated in patents of S. S. Bartlett, Feb. 25th, 1862, and John A. Dodge, May 23d, 1865; the 2d in patent of Andrew Wemple, Jan. 29, 1867; the 3d in patent of C. Wheeler, March 12th, 1861; the 5th in patents cited for the 1st; the 6th in patents of S. B. Haines, March 8th, 1864, and E. P. Russell, Feb. 14, 1865; the 7th, 8th, and 9th in patents of S. Colburn, July 3d, 1865; Jerre Urney, July 24, 1855; Cyril Wagner, June 24th, 1856; Jas. L. Fountain, Nov. 17th, 1857; M. Hollenbeck, May 18, 1858, and R. L. Allen, Sept. 7th, 1858; the 10th in patent of L. M. Batty, Sept. 19th, 1865; the 12th and 14th in patents of S. & J. H. Pouser, Feb. 14, 1860; Geo. Esterly, Jan'y 22d, 1861, and Allen, cited above. As at present advised, the remaining clauses may be allowed. Several of those rejected may be so modified as to remove all objection, it is believed. Specifications and their drawings are returned herewith.

(Signed) J. M. THACHER,
Ass't Exam'r in Charge.

878 34 BEACH ST., NEW YORK, *Sept. 11th*, 1867.

Hon. T. C. Theaker, Com'r of Patents.

SIR: The specification and drawings appertaining to the application for improvements in harvesters, filed by me (A. B. Graham) Feb. 11th, 1867, were received by me in a package from your office without any letter relating thereto, such letter having probably been enclosed by mistake in an envelope addressed to some other person. You will, therefore, oblige me by sending me a duplicate of the official letter that should have accompanied the papers.

Yours respectfully,

ALVARO B. GRAHAM,
By his att., E. S. RENWICK.

879 U. S. PATENT OFFICE,
WASHINGTON, D. C., *Sept. 14th*, 1867.

Alvaro B. Graham, Esq., care E. S. Renwick, Esq., 34 Beach St., New York.

SIR: Please find below the communication of the examiner in charge in the matter of your application for patent for alleged improvement in harvesters, filed Feb. 11th, 1867.

Very respectfully,

—— ——,
Commissioner.

EXAMINER'S ROOM No. 18.

In the matter of the application above referred to the applicant is respectfully informed in reply to his letter of the 11th inst. that through inadvertence the office letter which should have accompanied the specification and their drawing was not sent until the 6th or 7th inst.

J. M. THACHER,
Examiner in Charge,
Per H. BINNEY.

880 34 BEACH ST., NEW YORK, *Oct. 10th*, 1867.

Hon. T. C. Theaker, Com'r of Patents.

Application of A. B. Graham for imp'ts in harvesters. Filed Feb. 11th, 1867.

SIR: You are hereby authorized and respectfully requested to permit Messrs. Baldwin & Son to act as associate counsel in the matter of the above-entitled application.

Yours respectfully,

E. S. RENWICK,
Att'y for A. B. Graham.

881 WASHINGTON, *Dec. 31st*, 1867.

To the Commissioner of Patents.

SIR: Amend A. B. Graham's harvester specification, filed Feb. 11th, 1867, as follows:

Erase. Page 4, erase last 6 lines.
" " 5, " entire page.
" " 6, " down to end of line 7.
" " 7, " lines 7 to 11, both inclusive.

& insert. and insert—

"A." "Finger beam with the gearing carriage by a swivel joint and with the raking platform by hinge connections, so that the finger beam may be rocked relatively to both the gearing carriage and the raking platform with which it is connected."

Insert. Page 27, line 28, after "combination," insert "as set forth."

Erase & insert. Page 28, line 1, erase "a" and insert "the."

" Page 28, line 2, insert "the" before "draught

rod;" also before "two." Same line, insert "M & M" after "joints."

Erase. Line 5, erase "substantially as set forth."
Insert. Line 6, insert "as set forth" after "combination."
" Line 8, insert "vibrateable" before "link."
Erase. Page 28, lines 10 & 11, erase "substantially as set forth."
Insert. Page 28, line 12, insert "as set forth" after "combination."

882 Line 14, insert "vibrateable link" after "finger beam."
Erase. Lines 18 & 19, erase "substantially as set forth."
Insert. Line 26, insert "as set forth" after "combination."
Page 29, line 1, insert "and lifting connections" after "connections."
Erase. Erase lines 5 to 27, both inclusive.
Erase & insert. Page 30, erase lines 10 to 14, both inclusive, and insert—

"I also claim the combination, as set forth, of the finger beam, gearing carriage, swivel joint (M), between the finger
"B." beam and gearing carriage, raking platform, and hinge connections between the finger beam and raking platform."

Insert. Line 19, insert "as set forth" after "combination."
" Line 20, insert "and platform" after "wheel."
Erase. Line 22, erase "substantially as set forth."

Respectfully,
A. B. GRAHAM,
By his att'ys, BALDWIN & SON.

The spec'n & thin dr'g is herewith ret'd.

883

U. S. PATENT OFFICE,
WASHINGTON, D. C., *Jan. 9th*, 1868.

Alvaro B. Graham, care Messrs. Baldwin & Son, Washington, D. C.

SIR: Please find below the decision of the examiner in charge in the matter of your application for patent for alleged improvement in "harvesters," filed Feb'y 11, 1867.

Very respectfully,
—— ——,
Commissioner.

EXAMINER'S ROOM NO. 97.

The application above referred to has been reconsidered in connection with amendment. Upon further examination the last clause of claim appear- to be anticipated in applic. of C. B. Wagner, rej't'd July 31, 1855. Spec'n is returned herewith.

J. M. THACHER, *Examiner.*

884 No. 1.

In the United States Patent Office.

In the Matter of the Application of A. B. GRAHAM for a Patent for Harvesters. Filed Feb. 11, 1867.

WASHINGTON, *Jan.* 15, '68.

To the Commissioner of Patents.

SIR: The attention of the examiner is called to the fact that the model of C. B. Wagner's, rej'd *of* July 31, 1855, cited in the official letter of the 9th inst. for rejecting the last clause of claim in the above application, shows the shipping lever constructed in two pieces, rigidly fastened together so as really to act as one.

Graham's specifications, p. 14, described his lever as made in two parts, which "are notched and fit loosely into one another," and he claims "the combination of the movable member of the clutch (for throwing the cutter crank out of or into gear) with a clutch lever composed of two parts connected by notches, substantially as set forth."

As the difference between the two devices is obvious, it is hoped the claim will be allowed on a reconsideration of the reference.

Respectfully, BALDWIN & SON, *Att'ys.*

The specification is herewith returned.

885 34 BEACH ST., NEW YORK, *Jan.* 27*th*, 1868.

Hon. A. M. Stout, act'g Com'r of Patents.

Application of A. B. Graham for imp'ts in harvesters. Filed Feb'y 11th, 1867.

SIR: Enclosed I send twenty doll's (in check) to pay the residue of the fee in the above matter, notice of the allowance of which, dated Jan. 25th inst., has been received.

Yours respectfully, A. B. GRAHAM,
By his att'y, E. S. RENWICK.

886 1867.
No. 74342.
Alvaro B. Graham,
Of Waukegan,
County of Lake,
State of Illinois.
Harvesters.
Rec'd Feb'y 11, 1867.
Petition, "
Affidavit, "
Specification, Feb'y 11, 1867.
2. Drawing, 4 sheets, Feb'y 11, 1867.
Model, " 13, "
Cert. dep., —.
1. Cash, $15, Feb'y 11, 1867.

Add'l fee cert., —.
1. Add'l fee, cash, $20, Jan'y 29, '68.
Examined Jan'y 27, 1868. J. M. Thacher.
2. Issue, W. W. Heilburn, Jan. 24, '68.
3. Patented Feb. 11, 1868, &
Recorded, vol. —, page —.
Circular, Jan. 25, 1868.
E. S. Renwick, 34 Beach St., N. Y. city.

887 1867.

Imp't in harvesters.
Ret'd spec'n M'ch 7th, 1867.
Spec'n & thin dr'gs ret'd July 29, 1867.
Letter, Sept. 14, '67.
Spec'n & thin dr'gs to att'y, Oct. 23, 1867.
Spec'n to att'y, Dec. 31, 1867.
Th'k dr'gs to dr'*fht*'man, Jan. 2, 1868.
Spec'n ret'd Jan'y 9, 1868.

(Here follow diagrams marked pp. 888, 888*a*, 888*b*, & 889.)

890 [Endorsed:] Graham *vs.* McCormick. Def'ts' Exhibit Graham & Worden File Wrapper to Patents No. 67041. Jno. H. Whipple, notary public.

[Endorsed:] U. S. circuit court, W. dist. Illinois. Hugh Graham *vs.* Cyrus H. McCormick *et al.* 15. Def'ts' Exhibit Graham & Werden File Wrapper to Patent No. 67041. Jno. H. Whipple, notary public.

(65.)

DEPARTMENT OF THE INTERIOR,
UNITED STATES PATENT OFFICE.

To all persons to whom these presents shall come, Greeting:

This is to certify that the annexed is a true copy from the files of this office of the file wrapper, contents, and drawing in the matter of the letters patent granted N. B. Graham, ass'or to self, Wm. B. and Cyrus A. Werden, July 23, 1867, No. 67041, for imp't in harvesters.

In testimony whereof I, W. H. Doolittle, acting Commissioner of Patents, have caused the seal of the Patent Office to be hereunto affixed this third day of January, in the year of our Lord one thousand eight hundred and seventy-nine, and of the Independence of the United States the one hundred and third.

[SEAL.] W. H. DOOLITTLE,
Acting Commissioner.

891 Ex'd: A. R. H.
P. 627, B. 62.
Assign- to self & W. B. & C. A. Werden.

No. 379.
McCormick et al. } p. 888
v.
Whitman, Admr.

888

4 Sheets—Sheet 1.

A. B. GRAHAM.

HARVESTER.

No. 74,342. Patented Feb. 11, 1868.

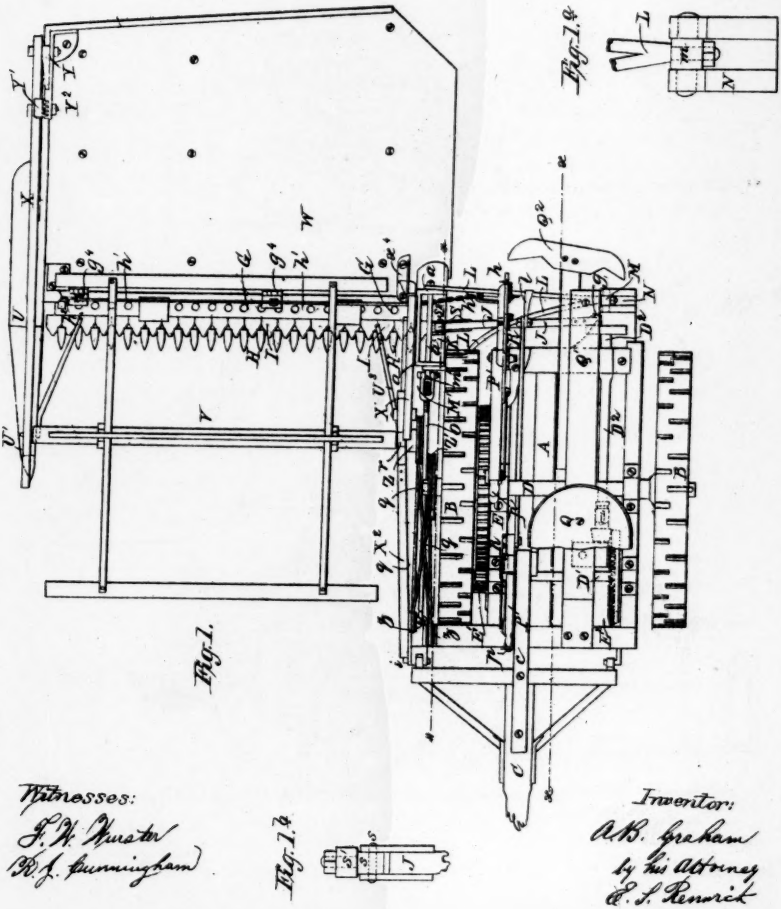

Fig. 1.

Fig. 1a.

Fig. 1b.

Witnesses:
F. P. Munster
R. J. Cunningham

Inventor:
A. B. Graham
by his Attorney
E. S. Renwick

4 Sheets—Sheet 2.

A. B. GRAHAM.

HARVESTER.

No. 74,342. Patented Feb. 11, 1868.

Fig. 2.

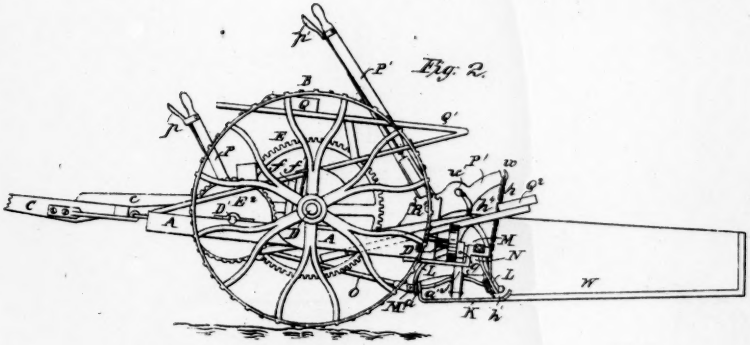

No. 379.
McCormick et al
v.
Whitman, Adam
} p. 888 a

Fig. 3.a

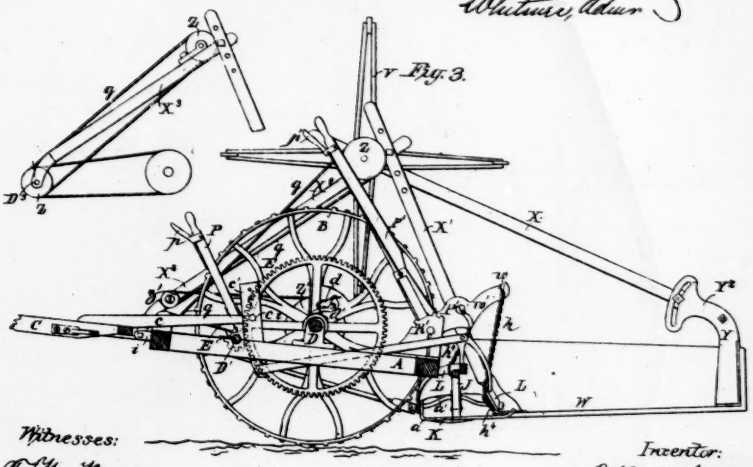

Fig. 3.

Witnesses:
F. W. Worster
W. J. Cunningham

Inventor:
A. B. Graham
by his attorney
S. S. Fenwick

4 Sheets—Sheet 3.

A. B. GRAHAM.

HARVESTER.

No. 74,342. Patented Feb. 11, 1868.

Fig. 4.

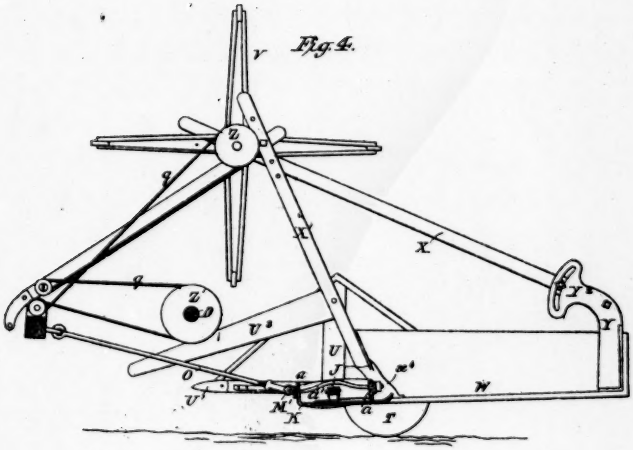

No. 379
McCormick et al.
v.
Whitman, Admr
p. 8882

Fig. 5.

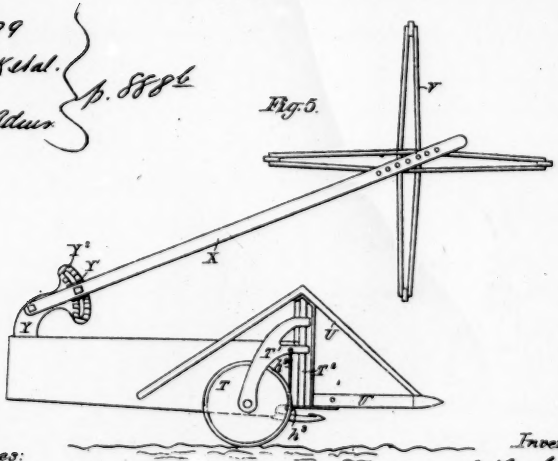

Witnesses:
F. W. Kurster
R. J. Cunningham

Inventor:
A. B. Graham
by his Attorney
E. F. Kennick

No. 379.
McCormick et al
v.
Whitmer. Admr
p. 889

889

4 Sheets—Sheet 4.

A. B. GRAHAM.

HARVESTER.

No. 74,342. Patented Feb. 11, 1868.

Fig. 7.

Fig. 6.

Fig. 8.

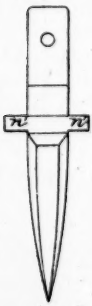

Fig. 9.

Fig. 11.

Fig. 12.

Fig. 10.

Witnesses:
F. W. Munster
R. J. Cunningham

Inventor:
A. B. Graham
by his Attorneys
E. G. Siggers & Co

Petition.

To the Commissioner of Patents of the United States of America:

The petition of Alvaro B. Graham, of Waukegan, in the county of Lake and State of Illinois, respectfully represents—

That your petitioner has invented a new and improved grain and grass harvester, which he verily believes has not been known or used prior to the invention thereof by your petitioner. He therefore prays that letters patent of the United States of America may be granted to him therefor, vesting in him and his legal representatives the exclusive right to the same, upon the terms and conditions expressed in the act of Congress in that case made and provided, he having paid fifteen dollars into the Treasury of the United States and otherwise complied with the requirements of said act; and he hereby authorizes O. D. Munn, S. H. Wales, A. E. Beach, of the firm of Munn & Co., of the cities of New York and Washington, or their accredited agents, to act as his attorneys in presenting the application and in making all such alterations and amendments as may be required, and to sign his name to the drawings.

ALVARO B. GRAHAM.

[1 doll. A. B. G., Feb. 25, 1864. 1 doll.]

892 *Oath.*

STATE OF ILLINOIS, } *ss:*
County of Lake, }

On this 25th day of February, 1864, before the subscriber, a justice of the peace in and for said county, personally appeared the above-named Alvaro B. Graham and made solemn oath that he verily believes himself to be the original and first inventor of the within-described harvester, and that he does not know or believe that the same was ever before known or used, and that he is a citizen of the United States.

Subscribed and sworn to before me this 25th day of Feb'y, A. D. 1864.

[5 cts. 5.]

JOHN C. CLARKSON,
Justice of the Peace.

893 To all whom it may concern:

Be it known that I, Alvaro B. Graham, of Waukegan, in the county of Lake and State of Illinois, have invented a new and improved grain and grass harvester; and I do hereby declare that the following is a full, clear, and exact description of the same, reference being had to the accompanying drawings making a part of this specification, in which—

Figure 1 is a side sectional view of my invention, taken in the line *x x*, figure 2;

Figure 2, a plan or top view of the same;

Figures 3, 4, 5, 6, and 7, detached views of parts pertaining to the same.

Similar letters of reference indicate corresponding parts in the several figures.

This invention has for its object the prevention of the draw-back and consequent side draught caused in ordinary machines by the "grain wheel," which is placed at the outer end of the finger bar to support it and the platform. The invention has further for its object the free passage of the finger bar over the ground and the perfect moving of the former to adjust itself to the inequalities of surface over which it may pass. The invention has further for its object the cutting in a proper manner of lodged grass or
894 grain, as well as the prevention of the choking or clogging of the sickle.

To enable those skilled in the art to fully understand and construct my invention I will proceed to describe it.

A represents the main frame of the machine, which is supported on two wheels, B B, the latter being placed loosely in their axle, C, and connected to it, when the machine is drawn forward, by pawls and ratchets, *a b*, so as to ensure the rotation of the axle during the forward movement of the machine, but allowing the latter to be "backed" without rotating the axle. On the axle C there is secured a toothed wheel, D, which gears into a pinion, *c*, placed loosely on a shaft, E, and connected with the latter, when desired, by means of a clutch, *d*, to which a lever, F, is attached. (See Figure 2.) This shaft E has a bevel-toothed wheel, *e*, on one end of it, which gears into a bevel pinion, *f*, on a shaft, G, the latter having a crank, *g*, on its back end, from which the sickle is driven by a pitman, H, the latter being at the rear of the main frame A.

I represents the finger bar, the inner end of which is attached by a joint, *h*, to a bar, J, which is at the rear of the main frame A and is connected thereto, at its left-hand side, by a swivel or universal joint, K, as shown in figures 2 and 3, said joint being composed of a rod, *i*, which is allowed to turn into a bearing, *j*, attached to the main frame, and the end of the bar J being cylindrical and
895 allowed to turn in the rod *i*, as indicated by the arrows. Figure 3, it will be seen, is a section of the joint taken in the line *y y*, figure 2, and this joint admits of the bar J and finger bar I being raised vertically, and also admits of said bars being turned in a more or less inclined position, in their transverse section, to admit of the fingers *k* and sickle L being turned more or less down towards the ground, as may be required. This adjustment of the fingers *k* and sickle L is effected through the medium of a lever, M, which is connected by a rod, *l*, with an upright, *m*, on bar J, shown in figures 1 and 2. This lever M may be retained in any desired position within the scope of its movement by means of a perforated bar, *n*, into the holes of which a pin, *o*, on the lever catches. Other fastenings, however, may be employed for this purpose.

The finger bar I may be raised separately from the joint *h*, as a centre, through the medium of a lever, N, which, like the lever M, is attached to the main frame A and has a chain or cord, *p*, attached to its lower end, said chain or cord passing around a pulley, *q*, on the bar J and being attached to the upper end of an upright, *r*, at-

tached to the finger bar at the joint *h*. Both bars I J may be elevated simultaneously by a lever, O, which is also attached to the main frame A and bears at its lower end on a lever, P, the outer end of which is connected by a chain, *s*, with the bar J. The lever O may be retained at any desired point within the scope of its movement by means of a rack bar, P′.

896 The grain platform Q is attached to the back part of the finger bar I and is supported at its rear by a wire or rod, *t*, attached to an upright, *u*, on the main frame A.

R is a bar, the front end of which is attached by a hinge or joint, *v*, to the front end of the main frame A. This bar R extends some distance back of the main frame A, and has a caster wheel, S, at its back end, and said bar passes through a yoke, T, on the rear part of the main frame, a screw, U, passing vertically through the top of the yoke and bearing on the bar R. By turning the screw U it will be seen that the back part of the main frame A may be adjusted higher or lower, as desired.

From the above description it will be seen that in case an obstruction presents itself to the inner end of the finger bar I the lever O is actuated in order to raise said end of the finger bar, and if an obstruction presents itself to the outer end of said bar the lever N is actuated.

The fingers *k* have angular or oblique arms *a′ a′* at the back parts of their upper ends, as shown in Fig. 2, and they have arms *b′ b′* at the back parts of their lower surfaces, which arms project laterally at right angles from the fingers, as shown in figure 7. These arms serve to prevent the grass or straw being drawn in behind the sickle L or between it and the fingers, and therefore effectually prevent the choking or clogging of the same. This

897 machine will work equally as well upon inclined as upon horizontal ground.

To the inner end of the finger bar I there is attached by a joint, *c′*, a clearer, V, which is provided with a wing, W, the latter being attached to the former by a joint, *d′*. This clearer, with its wing attached, gathers the grass or grain at the front part of the right-hand side of the main frame and brings it within the scope of the sickle. This sickle may be of the ordinary reciprocating kind, and therefore does not require a minute description.

I do not claim the connecting of the finger bar I to a bar, J, by a joint, *h*, for that has been previously done; but, having thus described my invention, what I do claim as new, and desire to secure by letters patent, is—

Insert A & erase all.

Am'd't filed Mc'h 24, 1866.

Erase. See amendment filed June 21, 1867.

[1st. The attaching of the bar J to the main frame A by means of the swivel or universal joint K, when used in combination with the finger bar I, attached to it by a joint, *n*, and this I claim irrespective of any peculiar position of the parts or particular application of the same to the frame of the machine, so long as the desired result is obtained.

2nd. The arrangement of the lever N, chain or cord *p*, and upright *r*, substantially as shown, for raising the outer end of the finger bar I, as set forth.

Erased. Cancelled by amendment filed June 21st, 1867.

3rd. The box R, provided with the caster wheel S and applied to the main frame A, as shown, when used in combination with the finger bar I and bar J, connected together and attached to the main frame, substantially as and for the purpose specified.] *

---

898 [4th] [2d]* 1st. The clearer V, when attached to the inner end of the finger bar I, and provided with the wing W, substantially as and for the purpose set forth.

[5th] [3d]* 2d. The oblique arms *a' a'*, at the upright parts of the fingers K, in connection with the arms *b' b'* at the under sides, substantially as and for the purpose specified.

ALVARO B. GRAHAM.

Witnesses:
JOHN C. CLARKSON.
D. N. BARKER.

899 Jan. 2, '66.

U. S. PATENT OFFICE, *Dec. 30th*, 1865.

SIR: Your harvester appl'n has been examined, and it is found that the 1st clause of your claim is anticipated in the patent of M. G. Hubbard, Oct. 11, 1864; the 2nd clause in the patents of C. Wheeler, Jr., Feb. 6, 1855, & Greeley & Buxton, July 21, 1863, and the 3rd clause in the patents of O. Stoddard, Dec. 14, 1858, & G. Farmer, Aug. 21, 1860. The 4th & 5th clauses, as the office is now advised, may be allowed.

Your spec. & one drawing are enclosed.

A. B. Graham, care Munn & Co., Wash., D. C.

Ams. 18. 604.

900 4. U. S. PAT. OFFICE, *Ap'l* 4, 1866.

SIR: The 1st clause of amended claim in your harvester appl'n is found to be anticipated in appl'n of Morgan & Piland, rej'd Nov. 26, 1858, & patent of M. G. Hubbard, Oct. 11, 1864, & others.

Your spec'n & thin dr'g are enclosed.

A. B. Graham, care Munn & Co., Wash., D. C.

Ams. 18.

901 WASHINGTON, D. C., *M'ch* 23, 1866.

Hon. T. C. Theaker, Commissioner of Patents.

Canceled. See amendment June 21st, 1867.

SIR: A. B. Graham's application for letters patent for an improved harvester is hereby amended by erasing the 1st claim and inserting instead the following:

---

* Words and sentences enclosed in brackets erased in original.

Insert A. Canceled by amendment filed June 21st, 1867.	["The combination of the finger bar I and bar J attached to the frame A by means of the universal joint or swivel K, in the manner and for the purpose herein specified."]*

Also by erasing the 2nd and 3rd claims and adjusting the ordinals of the remaining claims.

The specification and drawing are returned herewith and the case is respectfully submitted for reconsideration.

Your ob'd't servants, MUNN & CO.

902 Whereas I, Alvaro B. Graham, of Waukegan, in the county of Lake and State of Illinois, made an application for a patent for an improved grain and grass harvester, which application was filed in the United States Patent Office the 2nd day of December, 1865:

Now, know all men by these presents that I, the said Alvaro B. Graham, have made, constituted, and appointed, and do hereby make, constitute, and appoint, Edward S. Renwick, of the city of New York, my true and lawful attorney, for me and in my name to prosecute the said application, to receive the letters patent, or to withdraw the application; also to appoint such counsel or attorney as he may deem proper to aid in the said prosecution, and generally to do every act and thing which I might rightly do to obtain said letters patent, hereby ratifying and confirming each and every act my said attorney or his appointees may do and revoking a previous power of attorney executed by me.

Waukegan, Ill., Sept. 24th, 1866.

ALVARO B. GRAHAM.

[50 cts. A. G. G., Sept. 24, '66. 50.]

903 34 BEACH ST., NEW YORK, *Sept. 28th*, 1866.

Hon. T. C. Theaker, Com'r of Patents.

SIR: Enclosed you will find a power of attorney authorizing the writer to act for Alvaro B. Graham in the matter of his application for a patent for a harvester, filed Dec. 2nd, 1865. You will also find the specification and an amendment thereto. You will oblige the applicant by returning the specification and amendment to him, with a statement of the present condition of the application.

Respectfully y'r ob't serv't,

ALVARO B. GRAHAM,
By his attorney, E. S. RENWICK.

904 1. U. S. PAT. OFFICE, *Oct.* 1, '66.

SIR: Your harvester appl'n referred to in your letter of 28th ult. has been twice examined. The 2nd & 3rd clauses of the amend*mended* claim are allowed.

A. B. Graham, care E. S. Renwick, New York.

Ams. 18.

* Words and sentences enclosed in brackets erased in original.

905 34 BEACH ST., NEW YORK, *June 18th*, 1867.

Hon. T. C. Theaker, Com'r of Patents.

Application of Alvaro B. Graham for a patent for imp'ts in harvesters. Filed Dec. 2d, 1865.

The applicant in the above matter hereby withdraws his amendments filed March 24th, 1866, and requests that his specification in lieu of said amendments may be amended as follows, viz: Pages 8 & 9, strike out all after the numeral "1st," on the 8th line of page 8 of the specification, up to the word "the," on the 7th line of page 9; also strike out the numeral "5th," on the 13th line of page 9, and insert "2nd" in place thereof. The effect of this amendment, as your honor will perceive, is to limit the invention claimed under the patent to what your honor has stated in the official letter of Oct. 1st, 1866, to be allowed.

The duplicate drawings are herewith returned.

Respectfully, y'r ob't ser't,

A. B. GRAHAM,
By his attorney, E. S. RENWICK.

906 34 BEACH ST., NEW YORK, *July 6th*, 1867.

Hon. T. C. Theaker, Com'r of Patents.

SIR: Enclosed I send twenty dollars to pay the residue of the fee in the matter of my application for imp'ts in harvesters, allowed, as stated in the official notice dated July 5th, 1867.

Yours respectfully, A. B. GRAHAM,
By his att'y, E. S. RENWICK.

907 $\frac{22}{12}$ 1865.

No. 67041.

A. B. Graham, assignor to self, Wm. B. Werden, and Cyrus A. Werden,

Of Waukegan,
County of Lake,
State of Illinois.
Harvester.
Rec'd Dec'r 4, 1865.
Petition, "
Affidavit, "
Specification, Dec'r 4, 1865.
2. Drawings, "
Model, "
Cert. dep., —.
1. Cash, $15, Nov'r 30, 1865.
Add'l fee cert., —.
1. Add'l fee, cash, $20, July 11, '67.
Examined July 1, 1867. J. M. Thacher.
2. Issue, A. M. Stout, July 3, 1867.
4. Patented July 23, 1867, &
Recorded vol. —, page —.

Circular, July 5th, 1867.
E. S. Renwick, New York, present.

1865.

Spec. & thin dr'g ret'd Dec. 30, 1865.
Spec. & thin dr'g ret'd Ap'l 4, '66.
Letter, Oct. 1, 1866.

Ex.: J. A. W., M. McK.

(Here follow diagrams marked pp. 908 & 909.)

910, 911, & 912 (65.)

DEPARTMENT OF THE INTERIOR.

[Vignette.]

UNITED STATES PATENT OFFICE.

To all persons to whom these presents shall come, Greeting:

This is to certify that the annexed is a true copy from the records of this office of the drawing in the matter of letters patent granted A. B. Graham, dated July 23rd, 1867, No. 67041, for harvester.

In testimony whereof I, Ellis Spear, Commissioner of Patents, have caused the seal of the Patent Office to be hereunto affixed this seventh day of September, in the year of our Lord one thousand eight hundred and seventy-seven, and of the Independence of the United States the one hundred and second.

[Seal Patent Office, United States of America.]

ELLIS SPEAR,
Commissioner of Patents.

(Pages 913 & 914 omitted in printing, per stipulation. See p. 1015.)

(Here follow drawings marked pp. 915 & 915*a*.)

916 In the Circuit Court of the United States for the Northern District of Illinois. In Chancery.

HUGH GRAHAM, Complainant,
vs.
CYRUS H. MCCORMICK *et al.*, Defendants.

Testimony taken before Henry W. Bishop, master in chancery of said court, Monday, the 5th day of November, A. D. 1883.

Present: Mr. Ephraim Banning, for complainant; Messrs. George Harding and John R. Bennett, for defendants.

LEVI L. LAWRENCE, a witness on behalf of the defendants, being first duly sworn, was examined in chief by Mr. BENNETT, and deposes and says as follows:

Int. 1. Please state your name, age, residence, and occupation.

A. Levi L. Lawrence; I am manufacturing; president of the Wayne Agricultural Company, Richmond, Indiana.

Q. 2. Is the Wayne Agricultural Company engaged in manufacturing mowers and reapers?

A. Yes.

917 Q. 3. Did your company make a settlement with the complainant in this case for alleged infringement of patents owned and controlled by him?

A. I think so; yes.

Q. 4. Who acted on behalf of your company in that settlement?

A. I, through my attorney, Mr. Dixon.

Q. 5. Examine the paper now shown you, which is printed pages 126, 127, and 128 of complainant's evidence on accounting, and state if you have seen that paper before and what it is, and if it is correct.

A. (Witness examines paper.) I am satisfied this is correct.

Q. 6. Your company was a party to that paper?

A. Yes.

Q. 7. At the time of that settlement, on January 13, 1882, did any other papers pass between you and the complainant in relation thereto?

A. Yes.

Q. 8. Will you produce such papers?

A. I will.

The papers produced by the complainants are as follows:

1. Paper from Graham to the Wayne Agricultural Company, date January 13, 1882, which is hereto attached and marked Exhibit "1."

2. Also paper from Charles C. Linthicum to the Wayne Agricultural Company, which is hereto attached, marked Ex. "2."

3. Also three promissory notes, dated January 13, 1882, hereto attached, marked Ex. 3.

Q. 9. Did your company manufacture any Crawford mowers in the year 1882?

918 A. Yes.

Q. 10. And for that harvest?

A. Yes.

Q. 11. And did they contain the Graham improvement?

A. Yes; I suppose they did.

Q. 12. How many such machines did you make for the harvest of 1882?

A. I made one thousand machines.

Q. 13. Are those machines included in the promissory notes dated January 13, 1882, for $1,500, payable on January 20, 1883?

A. My understanding is it was.

Objected to unless the witness is willing to state what machines were included in each one of these notes—that is, the machines for what years were included in the first note, for what years in the second note, and for what years in the third note.

Q. 14. You may state what machines were included in the note of January 13, 1882, payable on January 20, 1883.

A. That was given for all the machines we should manufacture during that year, as I understand it; I was under obligation to pay for 500 machines each year, whether I made them or not.

Mr. HARDING:

Q. 15. What kind of machines were paid for in that year?

A. That year we made so many machines.

Q. 16. How many?

A. 1,000 machines.

919 Q. 17. What year?

A. 1882.

Q. 18. What kind of machines were they?

A. Crawford machines; we called them another name, but they were the same thing.

Q. 19. Had this Graham improvement?

A. Yes.

Mr. BENNETT:

Q. 20. What specific machines were included in the first note for $1,500, due January 20, 1883?

Objected to as leading and because no specific machines are included in it.

A. The machines which we were manufacturing that year.

Mr. HARDING:

Q. 21. How many were they in number?

A. We manufactured about 1,000.

Mr. BENNETT:

Q. 22. What was the second note for $1,500, due January 20, 1884, given for?

A. The same thing.

Mr. HARDING:

Q. 23. For machines manufactured in what year?

A. 1883.

Q. 24. How many were they in number?

A. We made about 1,100.

Q. 25. Were they the same machines as were included in the first note?

A. They were not exactly the same machines, but they embraced the same features.

Q. 26. The Graham patent?

A. Yes.

Q. 27. They were all alike, were they?

920 A. We made a little variation in our machines; there was a little difference in the construction of the machine, but they still embraced the Graham patent.

Mr. BENNETT:

Q. 28. What was the third note for $1,500, payable January 20, 1885, given for?

A. In anticipation of this coming season.

Mr. HARDING:

Q. 29. The season of 1884?

A. Yes.

Q. 30. How many machines do you calculate to be able to make for 1884?

Objected to as immaterial and incompetent.

A. We supposed we would make about the same as last year.

Q. 31. How many?

A. One thousand.

Q. 32. Do you intend to make the same kind of machine?

A. Yes.

Mr. BENNETT:

Q. 33. Do I understand you that all the machines which you manufactured for the harvest of 1882–'3, included in those two notes, and those you expect to manufacture for the season of 1884, for which the third note was given, embraced the improvement of Graham, as described and claimed in the first and second claims of his patent?

A. That is my impression.

Q. 34. Examine the paper which I now show you, dated January 13, 1882, and state what it is, if you know.

921 A. That is a receipt for money I paid him on machines which we have manufactured prior to that settlement.

Q. 35. Prior to the settelement of January 13, 1882?

A. Yes.

Q. 36. Was this payment of $1,465 in full for all machines which your company had made embracing the Graham patent, up to January 13, 1882?

A. Yes.

Q. 37. You may state what was included in that $1,456, and upon what basis of calculation that amount was arrived at.

A. Our firm licenses called for $3.00 a machine. We had made 300 machines, which called for $3.00 a machine; then there was a controversy on the Burdick & Leroy mower, a claim that we were infringing on, and they held the right to that.

Mr. HARDING:

Q. 38. Who do you mean?

A. Graham; they held them at that time for the State of Indiana, and the balance of that was included in that settlement for the machines which we had made.

Mr. BENNETT:

Q. 39. How much per machine was included in that settlement for the Burdick-Leroy patent?

A. I think $1.00 a machine.

Q. 40. Then in that settlement you paid at the rate of $3.00 for the Graham patent and $1.00 for the Burdick & Leroy patent?

922 A. That is the way we settled it.

Q. 41. This 300 included the entire number of machines?

A. 300 and some 80-odd machines; 300 we made; the others, the 85, were from the Ilion folks.

Q. 42. This $1,465 paid complainant January 13, 1882, was for 385 machines alleged to be an infringment under the Graham and Burdick and Leroy patents.

A. That is my understanding.

Complainant's counsel admits that the Burdick and Leroy patents for the State of Indiana was owned by the complainant to the extent specified in the paper produced, dated January 13, 1882, and standing in the name of Charles C. Linthicum, which paper of January 13, 1882, was executed and delivered at the instance of Mr. Graham.

Paper annexed hereto, marked Ex. "4."

Cross-examination by Mr. BANNING:

X Q. 43. Look at the contracts printed at pages 108 to 110, inclusive, in "Complainant's evidence on the accounting," and state whether they embody the contracts and agreements existing between you and the Grahams previous to Jan'y 13, 1882.

A. I think they do, sir.

X Q. 44. At the time that statement was made, in January, 1882, you reported that your company had manufactured 300 of

923 the Burdick and Leroy machines which were paid for at the rate of $3.00 per machine; the other additional number that you have mentioned were machines which had been previously manufactured by the Remington?

A. The Remington folks, New York; the Ilion folks.

X Q. 45. Did you report that number at the time of that settlement, or did you make a statement that it was a few machines?

A. Well, sir; I can't say; my impression is we were required to pay for all.

X Q. 46. Are you certain in your recollection as to whether any specific amount was paid per machine under the Burdick and Leroy patent or whether the matter was simply included in a general settlement, that $1,450 being for the royalty under the Graham patent on these machines and on account generally, in a lump settlement?

A. Well, I can't say that there was. I reported the exact number of these Ilion machines, but it was to cover those machines that we bought of them and sold of their manufacture. I can't say positively, but there was a certain number of these machines stated.

X Q. 47. In regard to the Burdick and Leroy patent, are you certain that a specific amount was paid per machine under the Burdick and Leroy patent in that settlement?

A. As near as I can recollect our transaction was a dollar
924 for each machine that we made under the Burdick patent.

X Q. 48. Your company and the Grahams were in litigation at that time?

A. Yes.

X Q. 49. You were contending for the right to manufacture under the Graham patent under the license of 1878, were you not?

A. Yes.

X Q. 50. Then wasn't this the arrangement, that, without knowing or stating how many machines you could manufacture in the future, you and the Grahams settled that litigation and your company took the full amount by license, or $4,500 for the three ensuing years, the whole arrangement being a lump settlement; wasn't that the case?

A. Yes.

X Q. 51. Did you state to Mr. Graham at that time how many machines you expected to manufacture during each year of the life of the patent?

A. I stated that at 500 then, in that way that we had, but I didn't know how many we could get out.

X Q. 52. Did you not state that it was uncertain how many you would manufacture or whether you would continue to manufacture during the life of the patent?

A. I didn't know whether I would be able to manufacture 500 every year. I would settle on that basis.

X Q. 53. You assumed that you would make 500 each year
925 and paid for it in the way specified in these notes?

A. Yes.

X Q. 54. The Graham inventions, as you have referred to them and as you say they were placed in your machines, were in the form shown in the Burdick & Leroy patent, were they not, as it was at that time—that is, the form on which it was assumed that you were using the invention and on which you paid at that time?

A. Yes.

Redirect examination — Mr. HARDING:

R. D. Q. 55. You understood that your machines embodied both the Graham and Burdick and Leroy patents?

A. The machines that were made in 1882 all had the Burdick and Graham devices straight through, as I understand the patents. In 1883 I changed my machine and did not include the Burdick device.

R. D. Q. 56. And did include the Graham?

A. Yes.

Mr. BENNETT:

R. D. Q. 57. Have any of these notes been paid?

A. Yes; one of them; the one that falls due in January now—that is, for '83 machines.

R. D. Q. 58. That is, the note for the machines of '82 has been paid and the money received by Mr. Graham and his attorney?

A. Yes.

R. D. Q. 59. Do you expect to pay the note falling due in January next, '84?

926 A. That is our intention, sir.

Mr. BANNING:

R. D. Q. 60. Then, as I understand you, your present machines do not embrace the Burdick and Leroy inventions?

A. I do not think they do; it has not the same device; we have changed that. We were right on it when we made the 300 machines.

Signature waived.

927 In the Circuit Court of the United States for the Northern District of Illinois. In Chancery.

HUGH GRAHAM, Complainant,

vs.

C. H. & L. J. MCCORMICK, Defendants.

Testimony taken before Henry W. Bishop, master in chancery of said court, Monday, the 5th day of November, A. D. 1883.

Present: Mr. Banning, for complainant; Mr. Bennett, for defendants.

W. J. HANNA, a witness on behalf of the defendants, being first duly sworn, was examined in chief by Mr. HARDING, and deposes and says as follows:

Int. 1. Please state your name, age, residence, and occupation.

A. W. J. Hanna.

Q. 2. Have you examined the testimony of Edward C. Franks, which is printed between pages 72 and 75 of the complainant's evidence on accounting?

A. I have.

Q. 3. Have you examined the report of the number of machines as given in answers to question 8?

A. I have.

Q. 4. Will you please state whether that account correctly

928 sets forth the number of machines which contained the Graham improvement, as claimed by the complainant in this case?

A. It does not correctly report the number.

Q. 5. Will you please state wherein such answer to question 8 of Mr. Franks' incorrectly sets forth the number of machines containing the improvement claimed by the complainant in this case, Mr. Hanna?

A. In the year 1874 C. H. & L. J. McCormick first began to build the single-frame machines which are claimed to be an infringement of the Graham patent. During the year 1874 the only single-frame machines built were mowers. The Advances Combined, built in 1874, were of the old-fashioned double-frame pattern, which is not claimed by the plaintiff to be an infringement. One of the errors Frank, the accountant, made in his statement was by including

6,140 Advance Combined machines built in 1874 and sold in that and subsequent years. He should have excluded them for the above reason. Another error was made by him in including in his statement 1,195 Single Advance reapers. He should have excluded them, because these machines were built and sold for reaping only with a rigid bar and platform, and without any mowing parts or lever. Another error was by failing to deduct 500 Droppers from his statement. As I understand, by mutual agreement between plaintiff and defendants, this number was to be deducted, they having been sold as plain reapers. These three errors amount to
929 7,835 machines, and should be deducted from his total of 33,577, making his net total only 25,742—a number much less than I reported to the master—accounted for, in part, by the fact that I reported among the sales the old stock sold by the defendants to the new corporation of the McCormick Harvesting Machine Co.

My report to the master was—

Advances, combined	11,963
Mowers	11,475
Droppers	3,762
	27,200

And this report is correct.

He shows total sales to be as follows:

Advances	17,560	
Single Advances	1,185	
Mowers	11,002	
Droppers	3,820	
		33,577

Deduct error sales of double-frame Advances:

Sold in 1874	3,947	
" " 1875	1,792	
" " 1876	210	

All built in 1874.

Sold in 1877	137	
" " 1878	29	
" " 1879	25	
		6,140
		27,437
Bro't forward	27,437	
Deduct all the single Advances built and sold, as they were only plain reapers, 1,195	1,195	
930	26,242	
Deduct, per agreement, 500 Droppers sold as plain reapers	500	
That would reduce Frank's account to	25,742 mach's.	

Hanna's acounting showed—

Sales of Advances, combined	11,963
Sales of mowers	11,475
Sales of Droppers	3,762
	27,200

This, however, includes the old stock sold in 1879 to this new corporation:

Mowers	539
Advances	571
Droppers	414
	1,524

I wish to state, in addition, that when Mr. Frank, the expert accountant, was engaged in making up his statement I volunteered to assist him or give him any information possible, and I called his attention particularly to the fact that the Advance Combined machine built by the defendant in the year 1874 were of the old double-frame patent, which, the complainant admits, is not claimed as an infringement, and I left him, presuming that he would remember what I stated. Of course, there is nothing on the face of our account books which would indicate always whether a machine is single frame or double frame. These account books were not kept at the time with the foreknowledge that Mr. Graham would be mak-
931 ing any claim on the single frame as against the double frame.

My memory is clear and distinct that the Combined Advance machines built by the defendants in 1874 for the market of that year were all of the old double-frame patents. I can, in corroboration of this statement, produce a circular issued by the defendants in the year 1875, stating that they had that year made a change to this single-frame machine, having heretofore built them of the double frame.

Q. 6. You will please refer to that circular and permit it to be inspected by complainant's counsel and made part of the record in this case.

A. Here is the circular issued from the office of C. H. & L. J. McCormick, Chicago, Illinois, dated 1875.

The defendants' phamphlet referred to is the one contained in complainant's evidence on accounting, at page 88.

Signature waived.

932 In the Circuit Court of the United States for the Northern District of Illinois. In Chancery.

HUGH GRAHAM, Complainant,
vs.
C. H. & L. J. MCCORMICK, Defendants.

Testimony taken before Henry W. Bishop, master in chancery of said court, Monday, the 5th day of November, A. D. 1883.

Present: Mr. Banning, for complainant; Mr. Bennett, for defendants.

JAMES B. NETHERCUT, a witness on behalf of the defendants, being first duly sworn, was examined in chief by Mr. BENNETT, and deposes and says as follows:

Int. 1. Please state your name, age, residence, and occupation.

A. James B. Nethercut; residence, Lake Geneva, Wisconsin; age, 27; occupation, book-keeper.

Q. 2. Were you ever connected with the Geneva Lake Crawford Manufacturing Company; and, if so, when and in what capacity?

A. Yes, I was; I occupied the position of shipping clerk for some four or five years. I went into their service 8 years ago the 26th day of December.

Q. 3. What position did you occupy in 1881?

A. I was book-keeper.

Q. 4. Do you know of the Geneva Lake Crawford Manufacturing Company having made a settlement with one Hugh Graham
933 for the alleged infringement of certain letters patent owned by him?

A. Yes.

Q. 5. Examine that paper and state what you find it to be.

A. Well, it was a settlement for all damages accrued, and, as we understand it, a permit for the future.

Paper offered in evidence, marked Exhibit "A."

Q. 6. Is the Geneva Lake Crawford Manufacturing Company still in existence; and, if not, who succeed that company?

A. No, sir; the business was turned over to Mr. Haskins—John Haskins—in 1880.

Q. 7. In what name is he conducting the business as the successor of the Geneva Lake Manufacturing Company?

A. John Haskins Manufacturing Company.

Q. 8. The John Haskins Manufacturing Company, successor to the Geneva Lake Manufacturing Company, were they to manufacture more machines for the harvest of 1881?

A. Yes.

Q. 9. How many did they manufacture for that harvest?

A. They manufactured 66.

Q. 10. Did it continue the manufacture for the harvest of 1882?

A. Yes.

Q. 11. How many machines were manufactured for 1882?

A. 203.
Q. 12. Did you manufacture any for the harvest of 1883?
A. No, sir.

934 Counsel for defendant offers in evidence a letter dated March 5, 1879, to Messrs. Flanders and Bottom, signed "Banning & Banning," hereto attached, marked Ex. "B."

Complainant's counsel admits that the letter produced was written by them, as counsel for the complainant in this case, to Messrs. Flanders and Bottom, counsel for the Geneva Lake Crawford Manufacturing Company.

Cross-examination by Mr. BANNING:

X Q. 13. You say that your company manufactured 66 machines for the year 1881?
A. Yes.
X Q. 14. And they paid $200 royalty for these 66 machines?
A. I don't know.
X Q. 15. Do you know anything about the license taken by the Geneva Lake Company from the Grahams?
A. Yes.
X Q. 16. What do you know?
A. There was such an instrument.
X Q. 17. Do you know anything about their paying money to the Graham-?
A. Yes.
X Q. 18. Do you know how much they paid for the machines manufactured in '81?
A. No, sir.
X Q. 19. Do you know of their having paid the sum of $200?
A. Yes.
X Q. 20. When was that?
935 A. January 29, 1880, they paid $200.
X Q. 21. Do you know what that $200 was paid for?
A. No, sir.
X Q. 22. Do you know about their subsequently paying $2,637.50 to the Grahams?
A. Yes.
X Q. 23. Do you know what that was paid for?
A. Satisfaction of that judgment.
X Q. 24. At Milwaukee?
A. Yes.
X Q. 26. Did they also at that time assign to Mr. Graham, or any one for him, an interest in the Burdick & Leroy patent that you remember of?
A. Yes.
X Q. 26. What was that for, if you know?
A. I don't know accurately; part of the State of Indiana.
X Q. 27. I mean what was the object or purpose or consideration for which that assignment was made; was it also as a part of the settlement on the judgment at Milwaukee?

Objected to as suggestive, and further objected —, as the paper produced, dated September 28, 1881, shows the entire consideration as appears from that document.

A. It was part consideration for the settlement.

X Q. 28. You say that your company made about 200 machines for the harvest of 1882, as I understand you; were those machines made like the 66 of the previous year or were they changed; and, if changed, in what way?

936 A. They were changed and the change was in the tilting device, substituting a cam motion for the motion used heretofore, similar to the one used in the combined machine.

X Q. 29. This instrument of September 28, 1881, gives your company the right to manufacture machines "made according to the specifications of letters patent of the United States, dated July 3, 1877, No. 192,681, or like the combined mower and reaper heretofore made by said company." Were the 200 machines which you have referred to as manufactured for the season of '82 made "like the combined mower and reaper" referred to in this clause or not?

A. The same principle was adopted; they were substantially the same.

X Q. 30. Do you know anything about the receipt dated April 27, 1883, attached to this instrument?

A. Yes.

X Q. 31. Do you know how much was paid at the time this receipt was given, April 27, 1883?

A. $500.

X Q. 32. And that was paid for the 200 machines manufactured the previous year, as above referred to, was it not?

A. Yes.

X Q. 33. Your company are not now manufacturing any machines of this class?

A. They did not last season; no, sir.

X Q. 34. And have not since those made for the harvest of '82?

937 A. No, sir.

X Q. 35. The Geneva Lake Crawford Manufacturing Company was insolvent in '81, was it not?

A. Yes; I would not be sure about the date—'80–'1.

X Q. 36. Did your company ever consider that the Burdick & Leroy machines which it was manufacturing was an infringement of the Graham patent before Judge Dyer's decision to that effect?

A. No, sir.

X Q. 37. Then, at the time this letter was written from our firm to Flanders & Bottom, March 25, '79, your company considered that you had nothing to settle for with the Grahams; in other words, that you had not infringed their patent and did not owe them anything on account of it?

A. We so understood it.

X Q. 38. And it refused to make this settlement at $700, referred to in this letter, did it not?

A. I don't know but what I should say in explanation we never saw that letter until after the case was settled.

Redirect examination:

R. D. Q. 39. The release to which your attention has been called is dated April 27, 1883, and the consideration therein mentioned is $1.00. Do you know whether any additional consideration was paid, over and above that expressed in the agreement?

A. There was no consideration at that time.

938 R. D. Q. 40. Was not the $500, which you have stated was paid by your company to Graham, paid on April 28, 1880, for machines made during the year '80?

A. (Witness refers to book.) $500 was paid April 28, '83.

R. D. Q. 41. The judgment to which you have referred against your company, obtained by the complainant in this case, was for $4,902.29, was it not?

A. Yes.

R. D. Q. 42. And the amount mentioned in this agreement of September 28, 1881, namely, $2,637.50, was paid in full satisfaction of that judgment as being the only nominal consideration?

A. Yes.

Mr. BANNING:

R. D. Q. 43. Referring to redirect question 1 and your answer thereto, what do you mean by saying "that there was no consideration at that time;" do you mean simply that the $500 was paid shortly afterwards or the next day, or what do you mean?

A. That that consideration included the payment of $500.

R. D. Q. 44. I think you have misunderstood the first redirect question. It states that the instrument speaks of a consideration of $1,000, and then asks you whether there was any further consideration. Now, I ask you whether there was any further consideration, or, in other words, what was the real consideration for that release of April 27, '8, '83; was it $1.00 or was it $500?

A. It was the $500.

939 Defendants' counsel offers in evidence t-o certain instruments in writing, bearing date May 6, '78, and May 3d, 1878, respectively, with receipt annexed thereto, dated May 8, '78, consideration being $2,650, which is hereto annexed and marked Exhibit "C."

Mr. BANNING: I admit the genuineness of the two instruments last offered in evidence.

Adjourned to 11 o'clock a. m., Nov. 6, and further adjourned to 10.30 a. m., Nov. 7.

940 In the Circuit Court of the United States for the Northern District of Illinois. In Chancery.

HUGH GRAHAM, Complainant,

v.

CYRUS H. MCCORMICK *et al.*, Defendants.

Testimony taken before Henry W. Bishop, master in chancery of said court, the 7th day of November, A. D. 1883.

Present: Mr. Banning, for complainant; Mr. Bennett, for defendant-.

Mr. BANNING: I now give notice to the defendants' counsel that the complainant hereby waives profits technically and asks a recovery of damages on the basis of a royalty or license fee.

Mr. Bennett, defendants' counsel, offers in evidence the license and agreement made by James A. Saxon to Cornelius Aultman, dated Dec., 25, 1872, and license and agreement made by Cyrenus Wheeler and Cornelius Aultman, being the licenses mentioned in the license and agreement from James A. Saxon to C. H. & L. J. McCormick, d'f'ts in this cause, which license was offered in evidence by compl'ts and printed at pages 163, 164, & 165 of compl't's record on accounting, for the purpose of showing the patents under which the def'ts herein were licensed by the said James A. Saxon to manufacture the machines in controversy in this cause, and paid to the said Saxon royalties amounting to $57,777.50, as stated in the report sub-

941 mitted by def'ts' accountant, William J. Hanna.

Def'ts' counsel also offers in evidence the following letters patent of the U. S.:

No. 12044, granted Cyrenus Wheeler, Jr., Dec. 5, 1854.
" 877, " " Jan'y 13, 1860.
" 41556, " " Feb'y 9, 1864.
" 41559, " " Feb'y 9, 1864.
No. 26095, " James H. Dodge, Nov. 15, 1859.

All of which are included in the above license and assignment.

Also letters patent No. 33691, Granted O. Billings Nov. 12, 1861.

Mr. BANNING: I object to the introduction in evidence of these patents and each of them on the ground that, complainant having waived profits, the present inquiry is simply as to the amount of damages he has sustained by the defendants' infringement, and it is, therefore, immaterial whether the defendants have paid anything as royalties under other patents or not, and generally on the ground that the patents cannot be introduced at this stage in such an inquiry, and I now ask the ruling of the master on this objection.

The objection is overruled by the master and the testimony admitted; to which ruling the complainant's counsel then and there excepted.

It is stipulated by and between counsel of respective parties that the stipulation hereto entered limiting defendants' time within

942 which to take proofs to Nov. 15, 1883, is extended to and in-

cluding Dec. 1, '83, with the understanding that no further extension whatever be allowed to defendants.

Adjourned to Tuesday, Nov. 27, 1883, at the Powers House, Rochester, N. Y., at 10 a. m.

943 United States Circuit Court, Northern District of Illinois. In Equity.

ALVARO B. GRAHAM *et al. against* C. H. MCCORMICK *et al.*

ROCHESTER, N. Y., *Nov.* 27, 1883.

Met pursuant to agreement.

Present: E. Banning, Esq., counsel for complainant; Geo. Harding, Esq., and John L. Bennett, Esq., counsel for defendants.

Testimony on behalf of defendants, taken before Henry W. Bishop, master.

CHARLES DEWEY, a witness called by defendants, in answer to interrogatories, testified as follows:

By Mr. BENNETT:

Q. What is your name, age, residence, and occupation?

A. C. D. Dewey; age, 44; residence, Batavia, N. Y., and am president Johnston Harvester Co., engaged in the manufacture of reaping and mowing machines.

Q. How long have you been connected with the Johnston Harvester Co.?

A. I have been directly connected with the management since the spring of 1874. I became president in Sept., 1874.

Q. Did your company on the 11th day of April, 1882, make settlement with the complainants in this cause under letters
944 patent No. 74342?

A. Yes.

Q. How much money did you pay Graham in that settlement?

A. Ten thousand dollars.

Q. State the manner in which the payments were made.

A. We gave one note for $3,000, I think, payable in Sept., 1882, on interest; another note for $3,000, payable Dec., 1882, on interest, and another note of $2,500, payable in the fall of 1883, without interest; I think that note fell due in Sept., 1883, and we also paid $1,500 cash by check.

Q. Was that settlement made with Mr. Graham after he had commenced suit against you?

A. Yes.

Q. And after the testimony had been taken by Mr. Graham?

A. Yes; his part of the testimony had all been taken.

Q. State the number of infringing machines which your Co. had made from the time you became connected with it, in 1874, to and including the date of settlement?

Mr. BANNING: Objected to, as the witness has not stated that the

settlement was made at any rate per machines or that any number of machines was disclosed to Mr. Graham at the time it was made.

A. We did not make a statement of the number of machines,
945 but we estimated it from 4,000 to 6,000.

Q. Give me your best judgment as to the actual number of these infringing machines you had made during that period.

A. My opinion is it would be nearly 6,000 machines.

Q. How many of that same class of machines have you made since the date of the settlement?

Same objection.

A. The season of 1882–'83 together we have made fully 2,000.

Q. Then the total number of machines would be about 8,000?

A. Yes; about that number.

Q. And did this settlement cover all those machines?

A. Yes.

Q. Do you intend manufacturing any of that style of machines for the harvest of 1884?

Mr. BANNING: Objected to as incompetent and immaterial, as their intentions can in no way affect Mr. Graham's rights.

A. Yes.

Q. How many are you calculating to manufacture for the harvest of 1884?

Same objection.

A. About 600.

Q. And those machines are included in the settlement which you made with Mr. Graham?

A. I so understand it.

946 Q. Your settlement with Graham gave you the right to continue to manufacture unlimitedly until the expiration of the patent without further judgment?

A. Yes.

Cross-examination by Mr. BANNING:

X Q. That settlement with the Grahams was a general lump settlement made at a gross figure and not at any rate per machine, was it not?

A. It was; yes.

X Q. In the making of that settlement was the number of machines manufactured by your Co. and which were claimed to be an infringement of the Graham patent mentioned or disclosed to Mr. Graham?

A. No, sir; only in a general way. We estimated that as the number of machines of the different kinds we had made that were successful.

X Q. And you stated that you had made various kinds of machines which did not embrace the features of the ones claimed to be an infringement of his patent?

A. Yes.

X Q. The whole settlement, then, was a compromise settlement of a lawsuit pending against your company on account of that alleged infringement, was it not?

A. Yes.

X Q. In making that settlement with the Grahams did your Co. claim or insist that its machines were not an infringement
947 of the Graham patent?

A. Yes; I think we did.

X Q. Who represented your company as counsel in the suit against it by the Grahams?

A. Mr. Harding and Mr. Bennett.

X Q. You have stated that your company has manufactured from 4 to 6,000 machines previous to that settlement. Are you certain as to the number, whether it was nearer 4,000 than 6,000 or not?

A. Only from recollection. It is my best judgment it was between 5 and 6,000; I should say about 6,000.

X Q. Have you made any examination or had any examination made to determine exactly with reference to the number of such machines?

A. No, sir; our books were burned.

X Q. So that it is all now a mere matter of recollection?

A. Yes; all of our records back of June, 1882, were destroyed.

X Q. Look at this release and license, printed on pages 124, 125 of complainant's record on accounting, and state whether or not it is the instrument executed by you and the Grahams at the time of that settlement, and whether it embodies all the agreements then made between you.

A. I am not positive, but I suppose it is an exact copy of it.

X Q. Has your company paid the notes it gave to Mr. Graham in the making of that settlement?

948 A. Yes; they have.

Redirect:

Q. The works of the Johnston Harvester Co. were destroyed by fire June, 1882, I understand?

A. Yes.

Q. Were all the books of the company destroyed at that time?

A. Not all the books.

Q. Were the books showing the record of the number of machines manufactured by you destroyed?

A. Yes; the books up to that time.

Q. In making this settlement with Graham did he contend that the machines which your company had manufactured infringed his patent?

A. He contended they did; still he admitted it was a lawsuit.

Q. Did Mr. McCormick or any one in connection with the defendants in this case ever offer to defend for you the case brought against you by this complainant?

Objected to as immaterial and incompetent.

A. Not to my knowledge.

Complainant's counsel admits that the model produced, marked "Complainant's Exhibit Johnston Model," represents the construction of machines manufactured by the Johnston Harvester Co. and included in the settlement with Graham, the complainant, and is the model that was offered in evidence by the complainants in the case of Graham *vs.* The Johnston Harvester Co., and alleged to be an infringement of the Graham patent in this suit.

949 Complainant's counsel move to suppress the foregoing deposition and each and every question and answer thereof on the ground that it is wholly incompetent, as relating to and showing nothing but a compromise or lump settlement made at a gross figure and not at any rate per machine.

Master overrules foregoing motion of complainant's counsel.

Complainant's counsel excepts to the ruling of the master.

Signature waived by consent of counsel for respective parties.

950 SAMUEL JOHNSTON, a witness called on behalf of defendants, testified as follows:

By Mr. BENNETT:

Q. What is your name, age, residence, and occupation?

A. Samuel Johnston; residence, Brockport, N. Y., and I have been engaged in the reaping-machine business.

Q. Were you ever connected with the Johnston Harvester Co.; and, if so, in what capacity?

A. I was president of that company from its organization until the summer of 1874.

Q. When was the company organized?

A. I think in January, 1870.

Q. Who succeeded you as president of the Co.?

A. Charles Dewey.

Q. During the time you were president of the Johnston Harvester Company were they engaged in the manufacture of mowers and combined machines?

A. They were.

Q. Examine the model marked Complainant's Exhibit Johnston Model and state if the Co. manufactured any such machines while you were president; and, if so, how many.

Mr. BANNING: Objected to as immaterial and incompetent.

A. They did and, as I remember it, it was over 2,000.

Q. That is, the Johnston Harvester Co. manufactured over 2,000 of such machines during the time you were president of the Co.?

A. Yes.

951 Q. Did they during that same time manufacture any other mowers or combined machines containing the same construction and arrangement for rocking or tilting the finger bar as shown in this model, Complainant's Exhibit Johnston Model?

Same objection.

A. They did. They made in 1871 a combined machine substan-

tially the same as the model, but they were not very successful, and they made the mowers with the hinged bar and tilting lever during the whole time. It was what we called the "Cycloid" mower.

Q. How many of the Cycloid mowers did the company ever manufacture?

Same objection.

A. Several thousand—at least 3 or 4,000.

Q. Were they front or rear cut machines?

A. Front cut.

Q. And did those front-cut Cycloid mowers contain the same construction and arrangement for tilting or rocking the finger bar as shown in the model, Complainant's Exhibit Johnston Model?

A. Not precisely the same, but a tilting lever and arrangement substantially the same, I should say.

Cross-examination — Mr. BANNING:

X Q. The front-cut mowers which you have referred to were not constructed as to their tilting arrangements like this model here before you, were they?

952 A. Not exactly the same device.

X Q. Were the other mowers manufactured before 1874 constructed like this model?

A. Yes, sir; all after 1871.

X Q. Were the combined machines which you have referred to as manufactured before 1874 also constructed like this model as to these features?

A. Precisely.

X Q. How many did you say those amounted to altogether, both mowers and combined machines, not of course including the front-cut mowers?

A. My impression is over 3,000; I said over 2,000; I am certain over two, from memory.

X Q. That includes all except the front-cut mowers which you have referred to?

A. That includes what I would call the successful machines; there were some made in 1871 that were not successful; they are not included; that includes all the successful machines.

X Q. Previous to 1874 how had your machines of this kind proved—successful or not?

A. Perfectly successful after and including the harvest of 1872.

X Q. Had your company made money or lost money in their manufacture?

A. They lost money in 1870 and 1871 and made money in 1872, 1873, and 1874.

X Q. Were you cognizant with matters connected with the settlement with the Grahams at the time it was made?

A. No, sir; I was consulted by Mr. Dewey as to whether it
953 infringed or not and looked up some patents; that is the only thing I knew of.

X Q. You have charge of the patent matters of the Johnston Harvester Co., have you not?

A. Not at all; quite the reverse.

X Q. Did you have anything to do, directly or indirectly, in the making of the Graham settlement?

A. I have stated all that I had to do with it; Mr. Dewey asked me certain questions, and I brought certain patents to him in answer to those questions; I had nothing at all to do with the settlement.

X Q. Were the front-cut machines which you have referred to constructed in such a way as to embrace the matters in controversy in this suit as contained and shown in this model of the Graham invention which I now hand you, namely, the combination, with the gearing carriage, of the finger-beam, vibratable link, draught rod, swivel joint connecting the vibratable link to the arm, swivel joint connecting the draught rod to the shoe, and arm or lever for controlling the rocking motions of the finger bar, the whole combined so as to permit of the finger bars rising and falling and rocking forward or backward?

A. They were; they all had those features.

X Q. As contained in this model of the Graham invention?

A. Yes, sir; substantially.

X Q. Do you consider that this other model offered in evidence in the suit against the Johnston Harvester Company and
954 marked Complainant's Exhibit Johnson Model contains the Graham invention as described in my preceding question?

A. I do, as described in your preceding question.

X Q. Did the Johnston Harvester Company file their answer in the suit against them on the advice or opinion you gave in reference to the question of infringement?

A. The question which was asked me was if I knew anything to anticipate the patents—to anticipate Graham—and I looked up the question and gave him such patents as I thought would have a bearing on the case. That is all I know of the question.

X Q. Did you look up the question of infringement and give him any advice or opinion on that question?

A. I think I gave him the opinion that the patent I gave him anticipated the Graham invention.

X Q. Will you please answer the question?

A. From memory it appears to me that the only question was anticipation, more than anything. I think he asked my opinion simply, but I do not remember.

X Q. Was it the opinion of the Johnston Harvester Company, so far as known to you from the consultations and conversations had with you, that the machines which you have referred to as made before 1874 infringed the first and second claims of the Graham patent or not?

955 By Mr. BENNETT: Objected to as calling for conclusions; objection sustained by the master.

X Q. So far as you state as to machines manufactured before 1874 you state it merely from recollection, do you not?

A. I do.

X Q. And you have had nothing to do with the Johnston Harvester Company's business for a good many years?

A. Not since 1874.

Redirect by Mr. BENNETT:

R. D. Q. You have stated that the Johnston Harvester Company, between 1871 and 1874, manufactured about 3,000 machines such as shown by the model, Complainant's Exhibit Johnston's Model. Please state what proportion of those machines were mowers.

Objected to by Mr. Banning as immaterial and incompetent, especially as it does not appear that Mr. Graham was ever informed what proportion were mowers.

A. I think over half of them were mowers.

R. D. Q. Were the combined machines which you manufactured during the period between 1870 and 1874 a success or failure?

A. A portion I considered a failure and a portion a success.

R. D. Q. Does this number of 3,000 which you have given include any of the unsuccessful machines?

A. It does not.

R. D. Q. After what period do you consider all the combined machines manufactured by you were a success?

Same objection.

956 A. After and including the harvest of 1872?

R. D. Q. Did the Johnston Harvester Company during that period sell the combined machines manufactured by them?

A. They did.

R. D. Q. Did they receive pay for them?

A. They made settlements for them—received notes and money for them.

R. D. Q. In the usual way in which this business is conducted?

A. Yes, sir.

Complainant's counsel move to suppress the foregoing deposition and each and every question and answer thereof on the ground that it is wholly incompetent, as relating to and showing nothing but a compromise or lump settlement made at a gross figure and not at any rate per machine.

Master overrules foregoing motion of complainant's counsel.

Complainant's counsel excepts to the ruling of the master.

Signature waived by consent of counsel for respective parties.

957 GIRVEN HOUSE, LITTLE FALLS, N. Y., *Nov.* 28*th*, 188–.

Met pursuant to adjournment.

Present: As before.

DAVID H. BURRELL, a witness called on behalf defe'd't-, in answer to interrogatories propounded by Mr. BENNETT, testified as follows:

Q. What is your name, age, residence, and occupation?

A. David H. Burrell; age, 42; Little Falls, N. Y., and am a merchant.

Q. Did you on the 4th day of August, 1881, enter into an agreement with Alvardo B. Graham relating to letters patent of the United States No. 74342, granted Alvardo B. Graham Feb. 11th, 1868?

A. I did.

Q. Was that agreement and settlement which you made with the Grahams for the benefit of the Warrior Mower Co. of Little Falls, N. Y.?

A. It was so intended.

Q. What was the consideration of that agreement?

A. $12,000.

Q. Was that amount of money actually paid by the Warrior Mower Co. to Mr. Graham?

A. It was paid by me and afterwards paid to me by the Warrior Mower Company.

Q. How many Warrior mowers or mowing machines had the Warrior Mowing Co. manufactured and sold up to and including the date of that settlement and agreement?

958 Mr. BANNING: Objected to as immaterial and incompetent, inasmuch as it has not been shown that the settlement was made at any rate per machine or that any number of machines was disclosed in the settlement.

A. I understood from Mr. Frank Bramer, after the settlement was made, it was from 10,000 to 12,000.

Q. Did the Warrior Mowing Co. continually manufacture mowing machines, especially the Warrior mower, after the date of that settlement with Mr. Graham?

A. They did.

Q. How many mowers did the company manufacture for the harvest of 1882, and after August 4th, 1881?

A. I think they made about 2,000 for the harvest of 1882.

Q. Did they continue to manufacture for the season of 1883; and, if so, how many such mowers?

A. They did; I should say from 2,800 to 3,000 machines.

Q. Does the company intend manufacturing such mowers for the harvest of 1884?

Objected to as immaterial and incompetent, as Mr. Graham's rights cannot be affected by the company's intentions.

A. They do.

Q. How many such mowers does the company intend making for the season of 1884?

Same objection, and because it is speculative and, notwithstanding their intentions, they may not make any.

A. From 2,500 to 3,000.

959 Q. That is the number of such movers they are preparing and intend making for the season of 1884?

A. The preparations are hardly made yet; our annual meeting is held in January.

Q. At the time you made this agreement and settlement with the Grahams suit had been commenced and was then pending against the Warrior Company for infringement of the Graham patent?

A. Yes.

Q. And this agreement and settlement which you made with Graham, dated August 4th, 1881, included all machines the Warrior Co. had made up to and including that date, and all they might make thereafter during the life of the patent?

A. I so understood.

Cross-examination by Mr. BANNING:

X Q. What is your present connection with the Warrior Mower Co., if any?

A. I have been a director for the past year.

X Q. What was Frank Bramer's connection with the company?

A. General manager.

X Q. Is he still connected with the company?

A. Only as stockholder; he is one of the directors.

X Q. What is Mr. Bramer's present physical condition?

A. He is very ill and not expected to recover.

X Q. Was Mr. Bramer's connection with the company such as he would be the proper party to know the number of mowing
960 machines manufactured by the Warrior Mower Company up to and including the date of this settlement?

Mr. BENNETT: Objected to as immaterial and incompetent.

A. I should think so.

X Q. You have stated that the arrangement with the Grahams was made after suit had been commenced against your company for infringement of the Graham patent. Please state fully all the facts and circumstances connected with the making of that arrangement, including the conversations had with you in reference to it, where they where had, with whom, &c.

A. The knowledge of this suit came to me through Judge Loomis, my father-in-law, who was president of the company, and I thought the suit was wearing on him and so I undertook to settle it. For that purpose I went to Chicago and had an interview with Mr. Graham at Mr. Banning's office, and asked them to show me what they based their suit upon, and after a little time they gave me the facts of the case. I suggested to them that perhaps it would be best for them to settle with us and told them the reason why I desired to settle. They said they would think it over, and that they were coming East and would stop at Little Falls to see me and perhaps a settlement could be made. A week or two after that Graham and Banning came to Little Falls and were here on the 4th of August, 1881. They questioned me as to the number of machines we had made. I told them I knew nothing about it; that I was
961 simply a director and stockholder of the company, and desired to get the matter settled on account of Judge Loomis, and I

finally made them an offer of a gross sum of money, and after some little argument over the matter it was finally lumped off at $12,000; that in brief is the history of the transaction.

X Q. Do you remember whether I stopped here on my way to N. Y., as I stated to you, and whether Mr. Graham and myself then came back from N. Y. at the time?

A. I think you came from N. Y. I do not remember your stopping here before.

X Q. Please state what was said and what took place between you and Mr. Graham in reference to that settlement at the time of the interview and the final closing of the arrangements here.

A. Mr. Graham said he would not accept less than $20,000, but if Mr. Banning insisted upon it——

Defendants' counsel objects to the witness repeating in answer to the question anything said by Mr. Graham as having been said by his attorney by way of inducement.

By the MASTER: Objection sustained.

Mr. Banning, complainant's counsel, excepts to the ruling of the master.

The master instructs the witness to state only what occurred between him and complainants, limiting his answer to the transaction between the parties referred to.

962 WITNESS: I replied I would pay him $12,000, and that was the last said; that he would have to settle it to suit himself, I did not care, and he finally accepted the offer.

X Q. You did not inform him of the number of machines previously manufactured by the Warrior Mower Company?

A. I did not.

X Q. Do you remember any statements made by yourself at the time of that settlement to Mr. Graham to the effect that the Warrior Mower Company's machines as manufactured for the first few years after it began business and up until about 1875 had been different in construction from the Warrior mower as manufactured afterwards and at the time of that settlement?

A. I think I told Mr. Graham the machine had been different in construction since about 1875 from what it was before; that the machines had been the same since about 1875.

X Q. What did you say to him on the question of infringement as to the machines manufactured before 1875?

A. I told him I understood they did not infringe.

X Q. What did you say to him as to infringement by those manufactured after 1875 and at the time of the settlement?

A. That if the patent was valid we infringed.

X Q. What did you say to him as to the views of Mr. Bramer, and as to the advice which your company had received from
963 counsel on the question of infringement?

Mr. BENNETT: Objected to.

MASTER: Objection sustained.

Mr. BANNING: Ruling of master excepted to; the object of the

question is to show that Mr. Brammer and the company's counsel were in favor of making a vigorous defence, both as to the validity of the patent and the question of infringement.

X Q. Please state whether you informed Mr. Graham in that interview that the Warrior Mower Company or Mr. Brammer had consulted with Mr. E. N. Dickerson, of N. Y., in reference to the question of infringement, and that Mr. Dickerson had advised them in substance that their machine as then constructed was not an infringement of the first and second claims of the Graham patent?

Same objection; objection sustained.

A. I told Mr. Graham that Mr. Dickerson said we had a valid defence.

X Q. Was that settlement with the Grahams made at any rate per machine or on the basis of any particular number of machines or any particular rate of royalty under the patent?

A. It was not.

Mr. BENNETT: Question and answer objected to as irrelevant.

X Q. If Mr. Graham said anything to you in the interviews to which you have referred in reference to his condition
964 financially or in reference to matters connected with his litigation under this patent as reasons for making the settlement, please state what he said, if you remember.

A. Yes; he said that one reason why he consented to the settlement was because he had got to have some money.

Mr. BENNETT: Question and answer objected to as immaterial and irrelevant.

X Q. Did you say anything to Mr. Graham at the time of that arrangement as to the probabilities of his being able to collect his decree in case he finally succeeded in sustaining his case against the Warrior Mowing Company? If so, please state what.

Objected to as immaterial and irrelevant.

A. Mr. Graham claimed that if the suit continued and the decree was attained the amount of money they would be forced to pay would be a very large sum. I do not remember he stated the amount. I said in reply that it was doubtful if the company was forced into liquidation by any parties obtaining a large judgment against it if even that amount could be collected. I was arguing to get a settlement. I told him that the company had made some bad debts in the West, and Graham told me that Judge Loomis and Mr. Gilbert had been made parties to the suit and they were responsible. I do not remember all that was said, but that was the substance of it.

964½ X Q. If you remember anything else that was said between you and Mr. Graham at the time of that settlement please state it.

A. It is difficult to answer the question and come within the law. We had a long argument, and I tried to show Mr. Graham it was for his interest to settle with us at the offer I made. Graham en-

deavored to show me that it was best for me to accept the proposition he tendered. He objected to accepting the amount which I offered, because of the bearing it might have in the future. I said to him I thought it was usual where parties stepped up and made a proposition to settle a concession should be made to them, and the result was I said to him squarely I would pay that amount and no more, and he finally accepted it.

X Q. You have had large experience in patent matters and in the settlement of patent claims, have you not?

A. I have had some experience.

X Q. What is the custom among manufacturers generally, so far as you know, in reference to the compromising and settling of patent suits or claims, particularly in reference to whether the full amount of royalty claimed or a much lower figure is generally paid?

Mr. BENNETT: Objected to.

MASTER: Objection sustained.

Mr. Banning excepts to ruling of the master.

965 X Q. The amount of $12,000 was paid in cash at the time of that settlement?

A. It was.

X Q. In the instrument executed between you and the Grahams at that time is this clause: "But it is understood and agreed that the said Burrell shall not make any settlement or grant any license by virtue hereof, except for a gross sum, at less than $5.00 per machine for the improvements specified in the first and second claims of said patent, such royalty to be subject, at his option, to a reduction of 40 per cent. in consideration of prompt payments," &c. Please state what arrangements you have since made with the Warrior Mower Company, particularly as to this provision of the agreement.

A. I have made no arrangement with them.

X Q. Then the matter stands that the claim against the company was transferred to you, and that you still hold it, as shown in this instrument?

A. They paid me the $12,000 afterwards, and that is all that has ever been done.

X Q. You have not, then, in fact, granted them any license under the patent?

A. There has been nothing done whatever.

X Q. Judge Loomis, president of the company, is your father-in-law, is he not?

A. He is.

X Q. And a very aged man, is he not?

966 A. He is.

X Q. Did you state to Mr. Graham, at the time of the arrangement, how many machines the Warrior Mower Company would manufacture in the future?

A. Not that I remember.

X Q. Is it now a certain fact that the Warrior Mower Company will manufacture for the season of 1884 the number of machines

you mentioned in your direct examination, or is it a mere estimate or an expectation of the company?

A. I can simply answer that I expect they will.

Redirect examination by Mr. BENNETT:

R. D. Q. As to the mowers manufactured by the Warrior Mower Company prior to 1876, did Mr. Graham, at the time of this settlement, contend that they infringed his patent?

A. I do not remember.

R. D. Q. This agreement and settlement you made with the Grahams, dated August 4th, 1881, and which you still hold, you hold for the benefit of the Warrior Mower Company, do you not?

A. It is so considered.

R. D. Q. And the Warrior Mower Company have paid you the $12,000?

A. They have.

R. D. Q. Did not the Warrior mower, as constructed by the Warrior Mower Company prior to 1875, contain the feature of the raising and lowering and rocking back and forth of the finger bar?

A. I cannot say.

967 R. D. Q. This settlement which you made with the Grahams included all the machines which the Warrior Mower Company had made and all they might hereafter make, if I understand you correctly?

A. Yes.

Recross-examination:

R. X Q. That is, it includes everything as stated in that assignment?

A. Yes.

R. X Q. You state that you held the agreement for the benefit of the Warrior Mower Company; did you not tell Mr. Graham at the time of the settlement that this was a personal matter, so far as you were concerned, and that it would only be for the benefit of the Warrior Mower Company in case you afterwards saw fit to make an arrangement with them, or something to that effect?

A. Yes; I did.

Complainant's counsel move to suppress the foregoing deposition and each and every question and answer thereof on the ground that it is wholly incompetent as relating to and showing nothing but a sale of the claim or, at most, a compromise or a lump settlement made at a gross figure and not at any rate per machine.

Master overrules foregoing motion of complainant's counsel.

Complainant's counsel excepts to the ruling of the master.

Signatures waived by consent of counsel for respective parties.

968 A. M. Ross, being duly sworn, deposes and says in answer to interrogatories propounded by Mr. BENNETT:

Q. What is your name, age, residence, and occupation?

A. Albert M. Ross; age, 48; residence, Ilion, N. Y., and I am sup't of the Remington Agricultural Co. of Ilion, N. Y.

Q. How long have you been sup't of that Co.?

A. About 20 years ago I went there as assistant sup't, and 6 odd years afterwards became sup't, and have since held that position.

Q. Do you know of the Remington Co. having made a settlement with Hugh & Alvardo B. Graham on April 15, 1873?

A. I did not know it at the time and until suit was commenced in 1880, I think, by Mr. Banning. After the notice was served, in hunting up among our papers we accidentally run across this agreement, settlement, and release, and we thought we had found a bonanza then.

Q. State what that settlement and release of April 15, 1873, was for and included.

A. It was for any machine we had made up to, but I do not know whether it run past that date or not, on which they claim infringement.

Q. How many of such mowers had your Co. manufactured up to April 15th, 1873?

Mr. BANNING: Objected to as immaterial and incompetent, unless the witness states that the settlement was made on the basis
969 of a certain number of machines and a certain rate per machine.

A. Prior to that time; I think it was 1867 or 1868 we had made the Wood mowers and reapers. Then we secured Allen Sherwood and his patents, and I think in 1868 we made a few of his mowers; and in 1872 Burdick & Le Roy, who had worked for us, got out what is called the Crawford patent. We bought that, and up to that year we had made the Sherwood. I presume we made 2,400 or perhaps a hundred or two hundred more, and we also made for the harvest of 1873—that is, between January and April, 1873, from 2 to 300 of the Crawford mowers, as a test, to put in with the Sherwoods. That is the best number I can give.

Q. Did this settlement and release which your Co. made with Graham, April 15, 1873, include the Sherwood mowers and the few Crawford machines you had made prior to that time?

A. It included all up to that date.

Q. How many of the Sherwood mowers had you manufactured prior to that date?

A. About 2,400.

Q. Had you during that time manufactured any other style of mowers other than the two or 300 Crawford mowers in the fore part of 1873?

A. We manufactured none except reversibles, which we took back and are not included in the number given.

970 It is agreed between counsel for respective parties that the settlement and release between the Remington Agricultural Co. and the Messrs. Graham, dated April 15th, 1873, is as follows:

$500. ILION, N. Y., *April 15th*, 1873.

Received five hundred dollars, which is in full for all claims and liabilities for royalties under and of infringements of letters patent of the United States granted to Alvaro B. Graham for improvement in harvesters, bearing date February 11th, 1868, and number 74342, by the Remington Agricultural Works and the Remington Agricultural Company to date; and it is expressly understood and agreed that by the payment of the foregoing sum the said parties do not recognize either the validity of said letters patent or the fact of infringement or liability, but the same is paid with the distinct reservation of the right to raise said questions in the future and without prejudice to the rights of the said parties.

And I, Alvaro B. Graham, represent and declare that I am the lawfully constituted agent and attorney of Hugh Graham, my assignee of said letters patent, and have good right and authority to give the foregoing acquittance and discharge, and that the same shall be and is a full protection against any claim under said letters patent.

(Signed) ALVARO B. GRAHAM.

971 Q. Your Co. on June 13, 1881, made another settlement with the Messrs. Grahams for the machines manufactured after 1873?

A. Yes.

Q. I notice in part of that agreement that in calculating the number of machines manufactured by your Co., and upon which you were to pay the $3.00 per machine, the machines sold by your Co. to the Geneva Lake Crawford M'f'g Co. and Wayne Ag't'l Co. were excluded. State how many there were of those machines that were excluded.

A. About 900.

Q. And those 900 machines were included in the settlement, but upon these you paid no royalty?

A. They were in the account, but we got them taken out and he took his chances of collecting the royalty from those companies and released our company, as stated in the agreement.

Q. At the date of that settlement, June 13, 1881, had not your Co. practically retired from the business of manufacturing mowers and reapers?

A. Wholly from reapers and nearly so from mowers.

Q. Is it not the case that the only mowers you have manufactured since then has been owing to your having on hand certain parts of mowing machines that you desired to get rid of?

A. Owing to prices, we abandoned the mower business, but what we have made latterly have been made from some 2 or 300 parts that we had. I doubt if we would have made any more if we had not had those parts.

Cross-examination by Mr. BANNING:

972 Q. The Remingtons were owners of the Burdick & Leroy patent, so that the 80 or 90 machines sold by them to the Wayne Ag't'l Co. were manufactured under it, were they not?

A. Yes.

X Q. Do you know whether the settlement with Grahams in April, 1873, was made at a lump figure or at any rate per machine?

A. The settlement covered what Sherwood & Crawford mowers we had made; he claimed on all Sherwood's and we held they did not infringe, but he said he was short and wanted money, and said he should have to commence suit, but he would then take so much and give us a release on that day; and on the second day, rather than have any bother, Remington paid this money. I did not know it until I found this paper.

X Q. Do you know whether the number of Sherwood mowers were given to him or not at that time?

A. I do not know whether the release specified the machine or the number.

X Q. As I understand one of your answers, you did not consider the Sherwood mower as within the Graham patent?

A. I have always maintained it was not.

X Q. Was the payment made by the Remingtons at the time of that settlement made in recognition of liability under the Graham patent on account of the Sherwood mowers previously manufactured by them?

973 A. It shut out any contest hereafter on those Sherwood mowers; the royalty was on the Crawford's, on which we did not know we infringed; but what he said about the others it was thought best to settle it at that time.

X Q. In other words, the Sherwood mowers were then included in the settlement, so as to prevent any future question; was that it?

A. Yes.

X Q. Do you know anything about Mr. Graham's financial condition or need for money at the time of that settlement?

A. I do.

X Q. Please state what you know on that subject.

A. He appeared to the Messrs. Remmington with his claims; they referred him to me. I had quite a contest; I have a great many that come to me with these claims, and told him he had no claim. He went away, and came to me again in the afternoon and said he was entitled to some consideration, and if I did not recognize him he should have to commence suit. He said, "I have not got the means to carry me home; I have fought so long," and he wanted to know if I would not go to Mr. Remmington with him. I told him I did not recognize his claim and could not do so. On the morning of the second day he had seen Mr. Remmington, and later on I saw Mr. Remmington and opposed his settlement, and Mr. Graham came in the afternoon, and that was the end of it for a time until this last case when I found that release, and until then I did not know that Mr. Remmington paid him any money.

974 Redirect examination by Mr. BENNETT:

R. D. Q. When Mr. Graham came to that first settlement in 1873 did he not contend and insist that the Sherwood mower was an infringement of his patent?

A. He did claim it was, and I claim it was not.

R. D. Q. And the release and settlement was made with Mr. Graham at that time on account of your having manufactured this 2,400 Sherwood mowers?

A. I cannot answer; I was not present when the settlement was made and the money was paid, but the release will show.

R. D. Q. And these Sherwood mowers were the only mowers you had manufactured during the period from 1868 to 1873, with the exception of the few experimental Crawford mowers which you have spoken of?

A. Yes; and the reversables. I will say this, that at that time there never had been any question on the Sherwood mowers infringing up to that date; we had not heard of it before.

R. D. Q. That was the first time Mr. Graham had made any claim against you for infringement by reason of the Sherwood mowers?

A. Yes.

Recross — Mr. BANNING:

X Q. Is the Remmington Ag't'l Co. now manufacturing or intending to manufacture any machines under the license which it
975 holds from the Grahams?

A. Yes.

X Q. What are its arrangements for manufacturing for next year's harvest?

A. We have sold 100 and will make them this winter.

X Q. Is that all you will manufacture?

A. I cannot answer that. We do not canvas-. If a man wants 50 or 100 and we get our price we make them.

X Q. Then you may manufacture more than 100?

A. Yes; if we can get prices that we can make something.

Redirect by Mr. BENNETT:

R. D. Q. State the circumstances of your taking this special order for the 100 mowers.

A. We had certain parts on hand and wanted to get rid of them. We had finger bars, guards, and a few castings; the other parts we will make.

Complainant's counsel move to suppress the foregoing depositions and each and every question and answer thereof on the ground that it is wholly incompetent, as relating to and showing nothing but a compromise or lump-settlement made at a gross figure and not at any rate per machine.

Master overrules foregoing motion of compl't's counsel.

Compl't's counsel excepts to the ruling of the master.

Signature waived by consent of counsel for respective parties.

976 M. E. ELLIOTT, a witness called on behalf of defendant-, being duly sworn, deposes and says:

I am 38 years old, and general manager of the Warrior Mower M'f'g Co. of Little Falls, N. Y.

At request of defendants' counsel I have made a personal examination of the books of the Warrior Mower Co. for the purpose of ascertaining the number of Warrior mowers manufactured and sold by that Co. since 1875, and find the number to be as follows:

In 1875	2,249	machines
" 1876	2,416	"
" 1877	1,570	"
" 1878	673	"
" 1879	750	"
" 1880	1,516	"
" 1881	2,162	"
" 1882	2,800	"
" 1883	2,493	"
Making a total of	16,629	"

manufactured by the Warrior Mower Co. since and including the harvest of 1875; and during that time the Warrior mowers as manufactured by our Co., as I understand it, have been of the same construction, so far as regards the raising and lowering and rocking back and forth of the finger beam. These figures I have given I have taken direct from the books of the Co. I have only been with the Co. since Aug., 1882.

977 Complainant's counsel moves to suppress the foregoing deposition and each and every question and answer thereof on the ground that it is wholly incompetent as relating to and showing nothing but a lump settlement made at a gross figure and not at any rate per machine.

Master overrules foregoing motion of compl't's counsel.

Compl't's counsel excepts to the ruling of the master.

Adjourned to meet at Narragansett Hotel, Providence, R. I., at 10.30 a. m., Nov. 30, 1883.

Signature waived by consent of counsel for respective parties.

(Endorsed:) Rec'd & filed & opened for Mr. Banning Dec. 20, 1883. W. H. Bradley, cl'k.

978 PROVIDENCE, R. I., *Nov. 30th*, 1883.

Met pursuant to adjournment.

Present: As before.

GEORGE L. COOK, a witness called on behalf of defendants, in answer to interrogatories propounded by Mr. BENNETT testified as follows:

Q. 1. What is your name, age, residence, and occupation?

A. George L. Cook; age, 62; residence, Providence, R. I., and I am manager of the Sprague Mowing Machine Company.

Q. 2. How long have you been connected with the Sprague Mowing Machine Company?

A. Since December 13th, 1873.

Q. 3. Did the Sprague Mowing Machine Company manufacture what was known as the Sherwood mowers?

A. Yes.

Q. 4. State how many Sherwood mowers were manufactured and sold by the Sprague Mowing Machine Company.

A. We have two books containing the numbers of every machine that has gone out, and the total number on those books is 12,595. It seems that — every machine that had been returned, whether defective or taken back. We had these machines sent all over the country, and I had all the unsold machines returned after I went there, and these machines were resold; when resold they went on the same book. I should think it would be fair to say, in
979 round numbers, about 10,000. This is guess-work, but it is approximately correct. The number over 10,000 has been duplicated, each machine being entered on the books twice.

Q. 5. Then the 12,595 machines manufactured and sold by the Sprague Mowing Machine Company includes something over 2,000 that were returned and resold?

A. Yes.

Q. 6. And after an examination of the books you are of the opinion that the total number actually manufactured and sold of the Sherwood mowers by the Sprague Mowing Machine Company is about 10,000?

A. About 10,000; yes.

Q. 7. And all these machines were known as the Sherwood mowers?

A. I would not say as to every one, but I think there were a few that were not the Sherwood.

Q. 8. With the exception of the very few, all those machines were Sherwood mowers?

A. Yes.

Q. 9. Did the Sprague Mowing Machine Company make settlement with the complainants in this case?

A. They did.

Q. 10. Do the books show any entry of that settlement?

A. Yes.

Q. 11. State what that entry is.

980 A. Suits in the spring of 1878 we settled, I claimed, in full, having their release for all claims for infringement of patent for $2,650, and the entry in our journal of September 14th, 1878, is "Amount paid Banning and Banning, of Chicago, attorneys for Hugh and A. B. Graham, in full settlement of all claims for infringement (see release on file), $2,650." I say the settlement was made in the spring of 1878; it is my impression it was not made until then.

Q. 12. And that settlement was in full for all claims under the

Graham patent by reason of your company having manufactured and sold the Sherwood mowers?

A. I presume that was it; it was in full for any claim they had on us or our agents.

Q. 13. Your company made this settlement with the Messrs. Grahams after suit had been brought against your agents, Gammon & Deering, in Chicago?

A. Yes.

Q. 14. And a decree had been entered against your agents, Gammon & Deering, of Chicago, to the effect that the Graham patent was valid and the Sherwood mower manufactured by your company was an infringment?

A. I do not recollect; I do not know I ever saw the decree. I know we settled for $2,650 and the Sherwood mower was what we were making.

981 Q. 15. And it was after the court's decision against Gammon & Deering?

A. Yes.

It is admitted that one of the Sherwood mowers manufactured by the Sprague Mowing Machine Company of Providence, R. I., was the machine involved in the case of the complainant against Gammon & Deering, and which the court in that case held to be an infringement of the first and second claims of the Graham patent, Gammon & Deering, the defendants therein, being the agent of the Sprague Mowing Machine Company.

Cross-examination by Mr. BANNING:

X Q. 16. You never had anything to do personally with the manufacture of these Sherwood mowers, did you?

A. No, sir.

X Q. 17. And are not familiar with their construction personally, are you?

A. Not as a general thing.

X Q. 18. Please state what your books show in reference to whether they were made all of one kind or whether there were any differences?

A. They made machines generally without tilters, and some machines were made with tilters; that is the only difference.

X Q. 19. When you say "tilters" you mean the sickle bar was arranged so it could be tilted or rocked?

A. That is what I understand.

X Q. 20. How were the others made?

982 A. They were made without the tilters.

X Q. 21. Do you mean by that made in such a way that the finger bar could not be tilted or rocked?

A. That is the way I understand. I was not familiar with the manufacturing of these machines, only what I would hear the superintendent say, but that is what I remember about the tilters.

X Q. 22. Have you examined the books to see how many of the Sherwood mowers which you have referred to were made in such a

way that the sickle or finger bar could be rocked or tilted? I use the words rocked and tilted as synonymous.

A. I do not, as I say, know about rocking, &c.

X Q. 23. I mean the finger bar. Could the points of the guards be raised or lowered?.

A. Yes; I have.

X Q. 24. Please state how many of such Sherwood mowers the books show to have been made in the way mentioned in my last question, viz., so that the finger bar could be rocked or tilted.

A. 997 is what I find; of these, 861 went to Graham & Deering and the balance went to Saint Louis.

X Q. 25. Then, so far as you know or have been able to ascertain from the books, was this number of 997 the only Sherwood mowers having this rocking or tilting feature?

A. Yes.

983 X Q. 26. Was the settlement with the Grahams, to which you have referred, made at any rate per machine or was it a lump settlement, made at a gross figure?

A. It was a lump settlement.

X Q. 27. Was it made as a compromise of a law suit then pending?

A. Yes.

X Q. 28. What was the condition of the Sprague Manufacturing Company at the time of that settlement, May, 1878?

A. Hopelessly bankrupt.

X Q. 29. Can you give us any statement as to its assets and liabilities at that time?

A. Yes.

By Mr. BENNETT: Objected to.

A. Here is a statement I made up from our trial balance of April 30th, 1878, which is the nearest date to the settlement with Gammon & Deering.

I find the company's assets amounting to $55,817.48. I added to this for certain contingencies, such as value of mowers in hand, tools and patterns, which I estimated at $2,000.00, making the assets $57,817.48, and I found the indebtedness to be $709,737.94.

X Q. 30. Who acted for your company in negotiating that settlement with the Grahams?

A. Benj. F. Thurston, Providence, R. I., and West & Bond, of Chicago.

X Q. 31. Who was superintendent and had special charge
984 of the building of the Sherwood mowers to which you have referred?

A. Charles H. Perkins was the manager, but Mr. Isaac M. Wood was the superintendent and machinist; he inspected every machine. I should call him the superintendent.

Redirect examination:

R. D. Q. 32. That suit in Chicago against Gammon & Deering, was it not?

A. Yes.

R. D. Q. 33. They were responsible, were they not?

A. Yes; I presume they were.

R. D. Q. 34. They had in their hands a large amount of money belonging to the Sprague Manufacturing Company at that time?

A. Yes.

R. D. Q. 35. Can you state that amount?

A. I can state approximately; they had $6,147.68.

R. D. Q. 36. And they refused to hand that over to your company until the suit brought against them by Graham had been settled?

A. Yes.

R. D. Q. 37. And the $2,650 which they paid complainants was a portion of that sum?

A. Yes.

R. D. Q. 38. And the balance, I suppose, they turned over to you?

A. Yes; finally.

R. D. Q. 39. How many Sherwood mowers had Gammon & Deering received from you and sold?

985 A. I went over the books to-day and I found of all kinds of machines they had 1,265, but I think there were a few more, so I should say they had a little over 1,300 machines. I know they had more than 1,265 machines, but I did not have time to examine and see whether they had been charged in the account. Gammon & Deering were agents at first, and afterwards we sold to them outright.

R. D. Q. 40. This settlement you made with the Grahams included not only the machines sold by Gammon & Deering, but all machines made and sold by the Sprague Mowing Machine Company?

A. Yes; all made and sold by them or their agents.

R. D. Q. 41. Were not all the Sherwood mowers so constructed that the ends of the finger guards could be raised and lowered?

A. I think not; but I cannot tell you positively.

R. D. Q. 42. Then you have no personal knowledge as to how they were constructed and arranged?

A. No, sir.

Recross-examination:

R. X Q. 43. The suit against Gammon & Deering was defended by the Sprague Manufacturing Company and at its expense?

A. Yes.

R. X Q. 44. And the settlement was made and their money paid?

A. Yes; our money in the hands of Gammon & Deering was paid to Graham.

986 Redirect examination by Mr. BENNETT:

R. D. Q. 45. Is there anything in your books which shows any difference in the construction of the Sherwood mowers as manufactured by your company?

A. Only this, so far as I know, when a tilter was sold it was marked "tilter," and if it did not have "tilter" on it is was not marked "tilter."

R. D. Q. 46. Does the books show those that were "tilters" and those that were not "tilters?"

A. Yes; we charged $150 more for tilters; that itself would show, and they were also marked "tilter."

R. D. Q. 47. Then you do not know what was meant by that term "tilter?"

A. I do not.

Complainant's counsel moves to suppress the foregoing deposition and each and every question and answer thereof on the ground that it is wholly incompetent, as relating to and showing nothing but a compromise or lump settlement made at a gross figure and not at any rate per machine.

Master overrules foregoing motion of complainant's counsel.

Complainant's counsel excepts to the ruling of the master.

Signature waived by consent of counsel for respective parties.

(Endorsed:) Rec'd, filed, and opened for Mr. Banning Dec. 20, 1883. W. H. Bradley, cl'k.

987 Whereas letters patent of the United States No. 74342 were issued to Alvaro B. Graham February 11, 1868, for an improvement in harvesters, which letters patent are now owned by Hugh Graham, of Bloomington, Illinois, and Alvaro B. Graham, of Chicago, Illinois; and whereas the Wayne Agricultural Company of Richmond, Indiana, is desirous of procuring a license under said letters patent:

Now, therefore, in consideration of one dollar and other good and valuable considerations to us in hand paid, the receipt whereof is hereby acknowledged, we, the said Hugh Graham and Alvaro B. Graham, hereby license and empower (without further payment of royalty) the said Wayne Agricultural Company and its successors in business, at Richmond, Indiana, to manufacture at said Richmond and to sell anywhere in the United States the improvements in harvesters described and claimed in said letters patent No. 74342 during the term of said letters patent and all extensions thereof.

And we hereby covenant and agree to and with the said Wayne Agricultural Company that we are the sole owners of said letters patent and have good right and full power to grant this license in manner aforesaid, and that we will forever protect and save harmless the said Wayne Agricultural Company against any person or persons claiming any title or interest therein or thereunder.

988 In witness whereof we have hereunto set our hands and seals this 13th day of January, 1882.

ALVARO B. GRAHAM. [SEAL.]
HUGH GRAHAM, [SEAL.]
By ALVARO B. GRAHAM,
His Att'y-in-Fact.

Received for record January 18th, 1882, and recorded in Liber P 27, page 235, of transfers of patents.

In testimony whereof I have caused the seal of the Patent Office to be hereunto affixed.

[SEAL.] V. D. STOCKBRIDGE,
Acting Commissioner.

Ex'd: F. C. T.

989 Whereas letters patent of the United States No. 133,013 were issued to Hiram M. Burdick and Tennis V. Le Roy, dated November 12, 1872, for an improvement in mowing machines;

And whereas Charles C. Linthicum, of the city of Chicago, county of Cook and State of Illinois, is the owner, by assignment, of an interest in said patent, acquired by virtue of an instrument in writing, signed by one John Haskins, dated the first day of October, 1881, and recorded in the United States Patent Office October 6, 1881, in Liber 27, page 14, of transfers of patents, which especially conveyed to said Charles C. Linthicum said letters patent for, to, and in the State of Indiana, and "all claims and rights of action whatever arising out of or connected with past infringements thereof committed in said State, or by the manufacture or sale of machines therein, including all claims of every kind and nature now or hereafter existing against the Wayne Agricultural Company of Richmond, Indiana, and the officers and agents thereof, and all persons or parties handling or selling infringing machines manufactured by it or them, whether such infringing machines have been or shall be sold in said State of Indiana or elsewhere:"

Now, therefore, in consideration of one dollar and other good and valuable considerations to me in hand paid, the receipt of which is hereby acknowledged, I, the said Charles C. Linthicum, do hereby license and empower (without further payment of royalty) the said

The Wayne Agricultural Company, and its successors and
990 assigns, in business at Richmond, Indiana, to manufacture at said Richmond, but without limitation as to right and place of sale, the improvements in mowing machines described and claimed in said letters patent No. 133,013 during the term of said letters patent and all extensions thereof.

As part of the consideration I do hereby release and discharge the said The Wayne Agricultural Company, their officers, agents, and any and all purchasers of mowing machines which have been or shall be manufactured by said company, from any and all liability arising or growing out of the use of the improvements covered by said letters patent, and I do hereby sell, assign, transfer, and convey to the said The Wayne Agricultural Company all rights and claims acquired by me by virtue of said instrument in writing, recorded as aforesaid, which are particularly specified in the above quotation from said instrument.

In witness whereof I have hereunto set my hand and seal this 13th day of January, A. D. 1882.

[SEAL.] CHARLES C. LINTHICUM.

Received for record January 18th, 1882, recorded in Liber V 27, page 15, of transfers of patents.

In testimony whereof I have caused the seal of the Patent Office to be hereunto affixed.

[SEAL.] V. D. STOCKBRIDGE,
Acting Commissioner.

Ex'd: F. C. T.

991 Ex. 3. L. L. Lawrence.

$1,500.00. CHICAGO, *January* 13, 1882.

On January 20, 1883, we promise to pay to the order of Alvaro B. Graham fifteen hundred dollars, at the National Bank of Illinois, Chicago, with interest at 8 per — annum after maturity.

This note is given as a part of the consideration for a license under patent No. 74342, and it is understood that if at any time before its maturity said patent or the first claim should be declared invalid by a court of competent jurisdiction payment of the same is not to be required or enforced, nor is it to bear interest until such decision shall be set aside or reversed or until a court of higher authority than the U. S. circuit court shall hold said patent to be valid in a decision from which no appeal is taken in the same or another suit.

If said patent should be decided to be invalid before the maturity of this note and then finally decided to be invalid before its payment, then payment thereof is never to be required or enforced, and in such case this note is to be of no force or effect.

WAYNE AGRICULTURAL CO.,
By L. L. LAWRENCE, *Pr.*

992 Ex. 3. L. L. Lawrence.

$1,500.00. CHICAGO, *January* 13, 1882.

On January 20, 1884, we promise to pay to the order of Alvaro B. Graham fifteen hundred dollars, at the National Bank of Illinois, Chicago, with interest at 8% per annum after maturity.

This note is given as a part of the consideration for a license under patent No. 74342, and it is understood that if at any time before its maturity said patent or the first claim should be declared invalid by a court of competent jurisdiction payment of the same is not to be required or enforced, nor is it to bear interest until such decision shall be set aside or reversed or until a court of higher authority than the U. S. circuit court shall hold said patent to be valid in a decision from which no appeal is taken in the same or another suit.

If said patent should be decided to be invalid before the maturity of this note and then finally decided to be invalid before its payment, then payment thereof is never to be required or enforced, and in such case this note is to be of no force or effect.

WAYNE AGRICULTURAL CO.,
By L. L. LAWRENCE, *Pr.*

993 Ex. 3. L. L. Lawrence.

$1,500.00. CHICAGO, *January* 13, 1882.

On January 20, 1885, we promise to pay to the order of Alvaro B. Graham fifteen hundred dollars, at the National Bank of Illinois, Chicago, with interest at 8 % per annum after maturity.

This note is given as a part of the consideration for a license under patent No. 74342, and it is understood that if at any time before its maturity said patent or the first claim should be declared invalid by a court of competent jurisdiction payment of the same is not to be required or enforced, nor is it to bear interest until such decision shall be set aside or reversed or until a court of higher authority than the U. S. circuit court shall hold said patent to be valid in a decision from which no appeal is taken in the same or another suit.

If said patent should be decided to be invalid before the maturity of this note and then finally decided to be invalid before its payment, then payment thereof is never to be required or enforced, and in such case this note is to be of no force and effect.

WAYNE AGRICULTURAL CO.,
By L. L. LAWRENCE, *Pr.*

994 Ex. 4. L. L. Lawrence.

$1,465.00. CHICAGO, *Jan.* 13, 1882.

Received of the Wayne Agricultural Company fourteen hundred and sixty-five dollars in full payment, settlement, and discharge of all claims and demands of every kind and nature of us or either of us against said company, and in particular of all claims and demands for royalty profits or damages under letters patent No. 74342 and No. 76436.

In witness whereof we have hereunto set our hands and seals this 13th day of January, A. D. 1881.

ALVARO B. GRAHAM. [SEAL.]
HUGH GRAHAM,
By ALVARO B. GRAHAM, [SEAL.]
His Attorney-in-Fact.

995 Ex. A. J. A. Nethercut.

Know all men by these presents that we, Hugh Graham, of Bloomington, Illinois, and Alvaro B. Graham, of Chicago, Illinois, in consideration of twenty-six hundred and thirty-seven and — dollars and other valuable considerations to us in hand paid, receipt of which is hereby confessed and acknowledged, have released and forever discharged the Geneva Lake Crawford Manufacturing Company, a corporation duly created, organized, and existing under and by virtue of the laws of the State of Wisconsin, and John Haskins, of Geneva Lake, Walworth county, Wisconsin, and hereby do release the said company and the said John Haskins and each of them of and from all claims, dues, debts, demands, and damages

whatsoever coming to us or accrued to us or whereof we or either of us are the owners from the beginning of the world unto this day, and we do especially agree that we will satisfy all judgments and decrees by us or either of us had against said company or said Haskins or either of them and to dismiss all actions now pending against them or either of them.

And we further agree that said company and said Haskins or either of them or the assigns of them or either of them may manufacture, sell, and use machines made according to the specifications of letters patent of the United States, dated July 3d, 1877, numbered 192,681, or like the combined mower and reaper heretofore made by said company, without claim by us or either of us
996 against them or either of them for royalty or damages on account of or by reason of letters patent of the United States, dated February 11th, 1868, and numbered 74342, for the life of said patent.

Witness our hands and seals this 28th day of September, A. D. 1881.

ALVARO B. GRAHAM. [SEAL.]
HUGH GRAHAM, [SEAL.]
By ALVARO B. GRAHAM,
Att'y-in-Fact.

Signed, sealed, and delivered in presence of—
E. H. BOTTOM.
THOMAS A. BANNING.

In consideration of one dollar and other good and valuable considerations to us in hand paid, the receipt whereof is hereby acknowledged, we hereby release and forever discharge the John Haskins Manufacturing Company of Geneva Lake, Wisconsin, from any and all liability for royalty or license fees due or to accrue under or by virtue of a certain license under the Graham harvester patent of February 11, 1868, No. 74342, granted by us to the Geneva Lake Crawford Manufacturing Company January 27, 1881, and subsequently transferred by it to the said John Haskins Manufacturing Company, and we hereby waive, release, and relinquish all claims of every kind now due or hereafter to become due on account of any matter or agreement contained or referred to in said license.

Witness our hands and seals this 27th day of April, A. D. 1883.

HUGH GRAHAM,
By ALVARO B. GRAHAM,
His Att'y-in-Fact.
ALVARO B. GRAHAM.

997 Ex. B.

CHICAGO, *March* 25, 1879.

Messrs. Flanders & Bottum, Milwaukee, Wis.

GENTS: We have submitted yours of yesterday to our client, considering it as an offer of $700 for a full release and license under the Graham patent No. 74342.

In view of the smallness of the claim he has concluded to accept the offer of your client to pay all the costs, which amount to $14, besides the actual court costs.

As said by our E. B. in his conversation with your Mr. Bottum, this arrangement is to cover only such machines as have been or may be manufactured by the G. L. C. M'f'g Co., and the license is not to be assignable or divisible, but is to be limited to the defendant and its successors at Geneva Lake; but of course both the release and license are to extend to the officers and agents of the defendant company acting as such.

Please draw and send us the papers and arrange to have your client send us its check for $714 as soon as we return them.

Yours truly, BANNING & BANNING.

998 Ex. C. Nethercut.

United States Circuit Court, Northern District of Illinois. In Equity.

HUGH GRAHAM *v.* ELIJAH H. GAMMON, WM. DEERING.

This suit was brought for the infringement of letters patent of the United States No. 74342, granted to me Feb'y 11, 1868, the defendants having sold mowers manufactured by the Sprague Mowing Machine Co., a corporation under the laws of Rhode Island.

The title to said patent is in Hugh Graham, but I have an interest in sums recovered for its infringement.

I desire to have settled all claims against said corporation for the infringement of said patent or any other patent owned, in whole or in part, by me relating to harvesters or mowers.

Now, therefore, I, Alvaro B. Graham, in consideration of the payment of the sum of twenty-five hundred dollars and part of the costs in said suit by said Sprague Mowing Machine Co. to Hugh Graham or his attorneys, for said Hugh and myself, and in consideration of one dollar to me paid, do hereby release said Sprague Mowing Machine Co. from all claims which I have in any
999 way against it for the infringement of any patent belonging to me, in whole or in part, relating to harvesters or mowers, by the manufacture and sale of harvesting or mowing machines, and I do also release all other persons from all claims for damages in consequence of the sale or use of any such machines or machine made and sold by the said Sprague Mowing Machines Company.

Witness my hand this sixth day of May, 1878.

A. B. GRAHAM.

Witness:
JOHN S. KELLY.
J. A. WALLACE.

United States Circuit Court, Northern District of Illinois. In Equity.

HUGH GRAHAM
vs.
ELIJAH H. GAMMON and WILLIAM DEERING.

The above-entitled suit was brought to recover damages for the alleged infringement of letters patent of the United States granted to Alvaro B. Graham February 11th, 1868, No. 74342—the defendants having sold mowers which they purchased from the Sprague Mowing Machine Company, the manufacturers thereof, being a corporation under the laws of the State of Rhode Island.

1000 This suit has been defended by the said Sprague Mowing Machine Company, the real party interested in such defense. The said Hugh Graham and said Sprague Mowing Machine Company are now desirous of settling finally not only the claims for damages involved in this suit, but also all claims for damages which the said complainant or the said A. B. Graham have against the said Sprague Mowing Machine Company for and on account of the alleged infringement of said patent or other patents owned by said Hugh Graham or A. B. Graham, relating to harvesters or mowers, by the manufacture, sale, or use of harvesting or mowing machines:

Now, therefore, in consideration of the sum of twenty-five hundred dollars, in hand paid by said Sprague Mowing Machine Company and part of the costs and expenses of said suit as agreed, the receipt of which is hereby acknowleged, we, Hugh Graham and Alvaro B. Graham, do hereby release the said Sprague Mowing Machine Company from all claims for damages which we or either of us have against said Sprague Mowing Machine Company for or on account of the manufacture and sale or use of harvesting or mowing machines containing the improvements or any of them secured by said patent No. 74342, or secured by any other patent owned by us or by either of us; and we do also hereby release our said claim against said Gammon and Deering, and also all claim or claims which we or either of us have against any other person,

1001 firm, or corporation on account of the use or sale of any such machine made and sold by said Sprague Mowing Machine Company.

Witness our hands this 3d day of May, A. D. 1878.

HUGH GRAHAM.
ALVARO B. GRAHAM,
By EPHRAIM BANNING, *Att'y.*

Witness to signature of Hugh Graham:
JOHN FULWILER.

CHICAGO, *May 8th*, 1878.

Rec'd of Gammon & Deering, for the Sprague Mowing Machine Co., seventy-six hundred and fifty dollars, damages and claims and costs hereinabove mentioned.

EPHRAIM BANNING,
Sol'r for Compl't and Att'y for A. B. Graham.

1002 In the Circuit Court of the United States for the Northern District of Illinois. In Chancery.

GRAHAM, Complainant, *vs.* MCCORMICK *et al.*, Defendants.

Testimony taken before Henry W. Bishop, master in chancery of said court, Friday, the 21st day of December, A. D. 1883.

Present: Mr. Ephraim Banning, for complainant; Mr. John Bennett, for defendants.

A. B. GRAHAM, a witness recalled on behalf of the complainant, being first duly sworn, was examined in chief by Mr. BANNING, and deposes and says as follows:

Q. 1. You have already been examined as a witness in this suit?

A. I have.

Q. 2. Do you remember the facts and circumstances connected with each of the settlements or arrangements made under the patent sued on in this cause, No. 74342?

A. I do.

Q. 3. Please state briefly the facts and circumstances connected with your settlement with the Remingtons in 1873, where the settlement was made, whom you saw and talked with, &c.

A. That settlement was made in Ilion, N. Y., between myself and the Remingtons. I think there were 2 of the brothers pres-
1003 ent. They denied any liability, but we finally settled for the sum of $500, they informing me that they had made but about 100 machines of the kind that I claimed as an infringement.

Q. 4. In your other deposition you spoke of Mr. Deering having mentioned the sale of 1,392 Sprague mowers in his deposition taken in the case against Gammon and Deering. Please state how you came to give that number and any other facts you may wish to state in reference to the matter.

A. That was the total number that they reported as having sold of Sprague machines. There was two kinds of these machines, and at the time I made my last deposition I was well aware of that fact, but it did not occur to me; it is a long time since the settlement was made and since I gave the subject any thought, but I was well aware of the fact that there were two kinds of machines. One kind I claimed infringed my patent and the other kind did not. The one I claim as infringing my patent was a tilting bar, and the other was a flat or stationary bar and had no tilting or rocking capacity.

Q. 5. Please state fully the facts and circumstances connected with your second arrangement with the Wayne Agricultural Company, namely, the one made in January, 1882.

A. My arrangement with that company was substantially
1004 this: they settled up with me and paid me the regular royalty, $3.00 a machine, under the Graham patent. They paid me $1.00 royalty on 300 machines that they had made under the Burdick and Leroy patents, the 85 having been purchased from the Remingtons, who owned the Burdick and Leroy patent at the time

they were manufactured and sold to them. I had subsequently negotiated and bought the State of Indiana under the Burdick and Leroy patent, and owned it at the time this settlement was made; that settlement so far now is as to the past. For the future of the patent they agreed to pay me $1,500 per year, and the understanding was at that time they would make somewhere in the neighborhood of 500 machines, but I gave them a free field to make as many or as few as they saw fit. The estimate was that they would make in the neighborhood of 500 machines in a year at that time, but they were to pay me the $1,500 per year, and I hold their notes—part of them have not been paid—for such payment, whether they made any machines or not.

Q. 6. State whether that arrangement was made at any specific rate per machine.

A. It was not.

Q. 7. State what Mr. Lawrence said in reference to their company's manufacturing in the future in case no agreement was made.

(Objected to; objection overruled.)

1005 A. It was briefly this: that on their part if they could not settle this matter up at the time and fix it upon a lease of the patent or annual use of it without reports, &c., that they should quit, and they did not know but that they would quit anyway, and stated in their business they had other goods that were more profitable and they didn't know what they should do, but he was willing—first, I think, he offered me $1,000 per year on a basis as he figured it. He says we have made as many machines this year as we will ordinarily make, and it was more than they had made in years previous, but he would give $1,000 and take his chance whether he made any or not. I would not deal on that basis. I asked him considerable more money than I got. We finally settled on the $1,500, and he was to take his own chance on the machines and I was to take my chance on making more.

Q. 8. Please state all the facts and circumstances connected with the final arrangement with the John Haskins Manufacturing Company, successors to the Geneva Lake Crawford Manufacturing Company, made in April, 1883.

A. As I stated when I was on the witness stand before, about a year ago, there was a controversy or disagreement as to whether the machine they had manufactured for the harvest of 1882 came within the terms of their license or whether, as they had constructed the machine for that year, that did not take it out of my patent.

1006 They contended very strenuously that it did. I contended that it did not, and in April some time—I don't remember the date, but I think it was in April—we finally closed the matter up, and they paid me the royalty on the first claim. I conceded the second claim, that they need not pay on the second claim, and they agreed and finally did pay on the first claim the sum of $500, according to the terms of the license, and — closed the matter up finally with them. I have an affidavit here with me of their superintendent, in which he states they were not making any machines for this

year, 1883, and probably never would make any more. The old gentleman was very old and desirous of discontinuing the business and getting out of it, and as they had not made any for this year, and were not going to, of course they would lose their trade to a large extent, and in all probability would not make any more machines.

(Objected to.)

Mr. BANNING: I now offer the affidavit signed by Edward Cheney and sworn to April 27th, 1883, before Chas. C. Linthicum, notary public, in evidence.

Defendants' counsel objects to the affidavit being received in evidence, as the same is incompetent for any purpose whatsoever. (Objection sustained.)

Q. 9. State what, if anything, the Ann Arbor Agricultural Company has done under the license granted to it since your last deposition was given.

1007 A. They have reported, Nov. 1st, 1883, according to the terms of their license, 354 machines sold for the year 1883. They sent me their check for $1,062 in payment for the year's business.

Defendants' counsel gives notice that he will ask for ample time to investigate and take such testimony as may be proper in reply to the new matter just brought up, and if that request be opposed will ask to have that question and answer stricken from the record.

Q. 10. State briefly, but fully, the circumstances connected with your arrangement with David H. Burrill, of Little Falls, N. Y.

(Objected to; objection overruled.)

A. As the contract shows, Mr. Burrill was to have the privilege of collecting any moneys that was due me from that company.

(Objected to, because it is in the contract.)

Q. 11. State particularly as to whether it was a compromise of a lawsuit and as to the statements made by Burrill at that time in reference to the probability of your being able to collect in case you finally succeeded in getting a decree against the Warrior Mower Company.

(Objected to; objection overruled.)

A. Mr. Burrill stated to me that their business had not been altogether profitable. They had made a good many bad debts in the West on the sale of their goods, and it was problematical, at least, whether I would be able to collect, even if I secured a decree and judgment against the company. It was a sale of my interest or claim or demand against that company to Mr. Burrill.

1008 Q. 12. What did Mr. Burrill say, if anything, as to whether he was buying your claim for himself or for the Warrior Mower Company?

A. That he bought that claim for himself. I might state his reasons if I had not already stated them—the conditions of his father-in-law's health—and he wanted to get the matter where he

could control it. At the time the thing was consummated I cannot give his words, but it was to the effect that there might somebody have to recompense the company for their misdeeds. I do not mean criminal misdeeds, but *that* their business transactions that had been intimated repeatedly during our negotiations; hence the clause of the contract placing it within my control or my attorney's control in the event of any litigation of Burrill on that claim.

Q. 13. State fully the financial condition of yourself and your brother, the complainant, at the time of these various settlements, begin-ing with the one with the Remingtons in 1873.

A. We were poor, financially very poor, and, if I remember correctly, all of the money that had been obtained by settlement or otherwise, up to and including the second money paid by Remington, was consumed in expense, meeting the expenses of litigation or other expenses connected with the business. I myself was at work most of the time in the employ of other companies—part of the time with Walter A. Wood & Co. and part of the time with D. M. Osborne & Co. The first money that we received that we could call our own and make any use of, if I remember correctly,
1009 was the money we received from Mr. Burrill.

Q. 14. Was it necessary, then, for you to make these settlements or arrangements in order to get money to live on and to carry on your litigation?

A. It was substantially our only resource. My brother was carrying on a small business in the city of Bloomington that made him a living, but he was afflicted with a large amount of sickness—lost various children and his wife during this time—and that left him about helpless, entirely helpless, for that matter, to render any assistance financially in this undertaking impossible, and, as I have said, I had no resources whatever, except what is involved in these patents and claims.

Cross-examination by Mr. BENNETT:

X Q. 15. Was this affidavit which you have identified and which purports to have been made April 27th, 1883, made at that time?

A. I could not swear to the date of it, but the affidavit was made at the time of the settlement. I have no memoranda beyond that to fix the date, but that affidavit was made at the time the settlement was finally concluded.

ALVARO B. GRAHAM.

Subscribed & sworn to before me—

H. W. BISHOP,

Master in Chancery of the Circuit Court of the United States for the Northern District of Illinois.

1010 Defendants' counsel admit that the following is a copy of the deposition given by Wm. Deering Oct. 16, 1877, in the cause of this complainant *v.* Gammon & Deering, and complainant's counsel offers the same in evidence, as follows:

OCTOBER 16, 1877.

WILLIAM DEERING, a witness produced, sworn, and examined on the part of the complainant, testified as follows:

Direct examination by Mr. BANNING:

1 Q. State your name, age, occupation, and place of residence.

A. William Deering; residence, Evanston; business, in Chicago; 51 years of age.

2 Q. Are you one of the defendants in this suit?

A. Yes, sir.

3 Q. State whether your firm was ever engaged in selling a machine known as the Sprague mower; and, if so, during what period of time.

A. We sold Sprague mowers during the years 1871, 1872, and 1873.

4 Q. State how your firm was engaged in selling such machines—as agents for the Sprague Manufacturing Company or on your own account?

A. We bought machines at an agreed price and sold them as we chose, on our own account.

5 Q. State how many such machines your firm sold during
1011 the time above stated or at any other time.

A. The number, as near as I can ascertain, was thirteen hundred and ninety-two (1,392).

6 Q. Look at this model, Complainant's Exhibit No. 1, and state how many of such machines sold by your firm had on them the arm or tilting lever reaching back near the driver's seat, shown in the model.

A. I cannot say with absolute certainty. We received in 1871 four hundred and fifty-nine mowers, none of which had tilting levers. Of those received in 1872, numbering about five hundred and seventeen, I only know with certainty that seventy-two had tilting levers; the remainder received in 1873 all had tilting levers, so that about four hundred and eighty-eight had tilting levers.

7 Q. Were the machines thus sold by your firm all alike, except that some had these tilting levers and others not?

A. As far as I know, they were all substantially alike, except as to this tilting lever.

8 Q. State whether or not you paid more for the machines with the tilting lever than for those without it; and, if so, how much more per machine.

A. We paid no more for those with the tilting lever.

9 Q. Did you sell them for more than those without the tilting levers?

A. In 1871 we sold the machines for $110.00 a machine, generally; in 1872, for $100.00 a machine; in 1873, for $105.00
1012 a machine, allowing our agents a commission of $25.00 on each machine sold, payable in farmer's paper. We did not sell them higher for having the tilting levers, but we found those having tilting levers more desirable and ready of sale in our market.

10 Q. State how the price of these machines compared with other machines then in the market not having the rocking motion shown in this model or some equivalent rocking motion.

A. Other and competing mowers were generally sold at higher prices than the Sprague mower. I do not know that the price of the Sprague mower was appreciably affected by what you call its rocking motion. The Sprague mower was lighter and simpler in construction than many of its competitors.

11 Q. State whether your firm has any arrangement with the Sprague Manufacturing Company by which you are protected against this claim of the complainant. If so, please state such arrangement.

Objected to as not material.

A. We had no specific arrangement in regard to this particular claim prior to the commencement of this suit.

12 Q. State whether or not the provision for this rocking motion in the Sprague machine referred to above made the machine sell more readily than it would otherwise have done, considering the competition in the market.

1013 A. I do not know.

13 Q. Your firm is composed of yourself and your codefendant, Elijah H. Gammon, and the machines above mentioned were sold by you and Mr. Gammon?

A. Yes, sir.

Cross-examination waived by defendants' counsel.

WILLIAM DEERING.

(Endorsed:) Filed July 21, 1884. Wm. H. Bradley, clerk.

1014 NORTHERN DISTRICT OF ILLINOIS, *ss:*

I, William H. Bradley, clerk of the circuit court of the United States for said northern district of Illinois, do hereby certify the above and foregoing to be a true and correct transcript of the record of the proceedings had in said court in the cause wherein Hugh Graham is the complainant and Cyrus H. McCormick, Leander J. McCormick, and Robert H. McCormick are the defendants, as the same appear from the files and records of said court now remaining in my custody and control.

In testimony whereof I have hereunto set my hand and affixed the seal of said court, at my office, in Chicago, in said district, this twenty-first day of September, 1885.

[Seal of Circuit Court U. S., Northern Dist., Illinois, 1855.]

WM. H. BRADLEY, *Clerk.*

1015 United States Supreme Court.

CYRUS H. McCORMICK *et al.*, App'ts,
vs.
HUGH GRAHAM. } No. 379.

It is hereby agreed and stipulated by counsel that the transcript should be corrected in the following particulars:

First. By omitting from page 836 to page 839, inclusive, and by omitting pages 913 and 914 (the same being a repetition of what is found elsewhere).

Second. By substituting page 346 for page 390, and page 890 for page 846 (these pages having been improperly transposed).

Third. By substituting the drawings, page 888 and page 889, for the drawings, page 903 to 911, inclusive, and the last-named drawings for the former (the same having been improperly transposed).

The clerk is requested to make these alterations before printing.

EPHRAIM BANNING,
THOMAS A. BANNING,
Counsel for Appellees.

ROB'T H. TARKINSON,
Of Counsel for Appellant.

1016 (Endorsed:) Sup. Court U. S. 1887, Oct'r term. No. 379. Cyrus H. McCormick *et al.*, app'ts, *vs.* Peter Whitmer, adm'r. Stipulation to correct record. Filed Jan'y 30, 1888.

Endorsed on cover: N. Illinois C. C. U. S. No. 379. Cyrus H. McCormick and Nettie Fowler McCormick, executor and executrix of Cyrus H. McCormick, deceased; Leander J. McCormick, and Robert H. McCormick, appellants, *vs.* Peter Whitmer, administrator of Hugh Graham, deceased. Filed October 12, 1885.

1 Supreme Court of the United States. October Term, 1888.

CYRUS H. MCCORMICK and NETTIE FOWLER MCCORMICK, Executor and Executrix of Cyrus H. McCormick, Deceased; Leander J. McCormick, and Robert H. McCormick, Appellants,
vs.
PETER WHITMER, Administrator of Hugh Graham, Deceased.
} No. 108.

It appearing that letters patent to A. B. Graham No. 74342, issued February 11, 1868, and letters patent to A. B. Graham No. 67041, issued July 23d, 1867, attached hereto, being a part of the transcript of record in the above-entitled cause, have been inadvertently omitted in the printing, it is therefore stipulated by the parties hereto that the clerk may print such patents as an addition to the printed transcript of record herein.

ROB'T H. PARKINSON,
Attorney for Appellant.
THOMAS A. BANNING,
Attorney for Appellee.

2 UNITED STATES PATENT OFFICE.

ALVARO B. GRAHAM, of Waukegan, Illinois, assignor to himself, William B. Werden, and Cyrus A. Werden.

Improvement in Harvesters.

Specification forming part of Letters Patent No. 67041, dated July 23, 1867.

To all whom it may concern:

Be it known that I, Alvaro B. Graham, of Waukegan, in the county of Lake and State of Illinois, have invented a new and improved grain and grass harvester; and I do hereby declare that the following is a full, clear, and exact description of the same, reference being had to the accompanying drawings, making a part of this specification, in which—

Figure 1 is a side sectional view of my invention, taken in the line *x x*, Fig. 2; Fig. 2, a plan or top view of the same; Figs. 3, 4, 5, 6, and 7, detached views of parts pertaining to the same.

Similar letters of reference indicate corresponding parts in the several figures.

This invention has for its object the prevention of the drawback and consequent side draft caused in ordinary machines by the grain-wheel, which is placed at the outer end of the finger-bar to support it and the platform.

The invention has, further, for its object the free passage of the

finger-bar over the ground, and the perfect moving of the former to adjust itself to the inequalities of surface over which it may pass.

The invention has, further, for its object the cutting in a proper manner of lodged grass or grain, as well as the prevention of the choking or clogging of the sickle.

To enable those skilled in the art to fully understand and construct my invention, I will proceed to describe it.

A represents the main frame of the machine, which is supported on two wheels, B B, the latter being placed loosely on their axle C, and connected to it, when the machine is drawn forward, by the pawls and ratchets *a b*, so as to insure the rotation of the axle during the forward movement of the machine, but allowing the latter to be backed without rotating the axle.

On the axle C there is secured a toothed wheel, D, which gears into a pinion, *c*, placed loosely on a shaft, E, and connected with the latter, when desired, by means of a clutch, *d*, to which a lever, F, is attached. (See Fig. 2.) This shaft E has a bevel-toothed wheel, *e*, on one end of it, which gears into a bevel-pinion, *f*, on a shaft, G, the latter having a crank, *g*, on its back end, from which the sickle is driven by a pitman, H, the latter being at the rear of the main frame A.

I represents the finger-bar, the inner end of which is attached, by a joint, *h*, to a bar, J, which is at the rear of the main frame A, and is connected thereto, at its left-hand side, by a swivel or universal joint, K, as shown in Figs. 2 and 3, said joint being composed of a rod, *i*, which is allowed to turn in a bearing, *j*, attached to the main frame, and the end of the bar J being cylindrical and allowed to turn in the rod *i*, as indicated by the arrows.

Fig. 3, it will be seen, is a section of the joint, taken in the line *y y*, Fig. 2, and this joint admits of the bar J and finger-bar I being raised vertically, and also admits of said bars being turned in a more or less inclined position in their transverse section, to admit of the fingers *k* and sickle L being turned more or less down toward the ground, as may be required.

This adjustment of the fingers *k* and sickle L is effected through the medium of a lever, M, which is connected, by a rod, *l*, with an upright, *m*, on bar J. (Shown in Figs. 1 and 2.)

This lever M may be retained in any desired position within the scope of its movement by means of a perforated bar, *n*, into the holes of which a pin, *o*, on the lever catches. Other fastenings, however, may be employed for this purpose.

The finger-bar I may be raised separately from the joint *h* as a center through the medium of a lever, N, which, like the lever M, is attached to the main frame A, and has a chain or cord, *p*, attached to its lower end, said chain or cord passing around a pulley, *q*, on the bar J, and being attached to the upper end of an upright, *r*, attached to the finger-bar at the joint *h*. Both bars, I J, may be elevated simultaneously by a lever, O, which is also attached to the main frame A, and bears at its lower end on a lever, P, the outer end of which is connected, by a chain, *s*, with the bar J. The lever O may

2 Sheets—Sheet 2.

A. B. GRAHAM.

Harvester.

No. 67,041. Patented July 23, 1867.

No. 108.
McCormick et al
v
Whitmer Adm'r
} p. 5

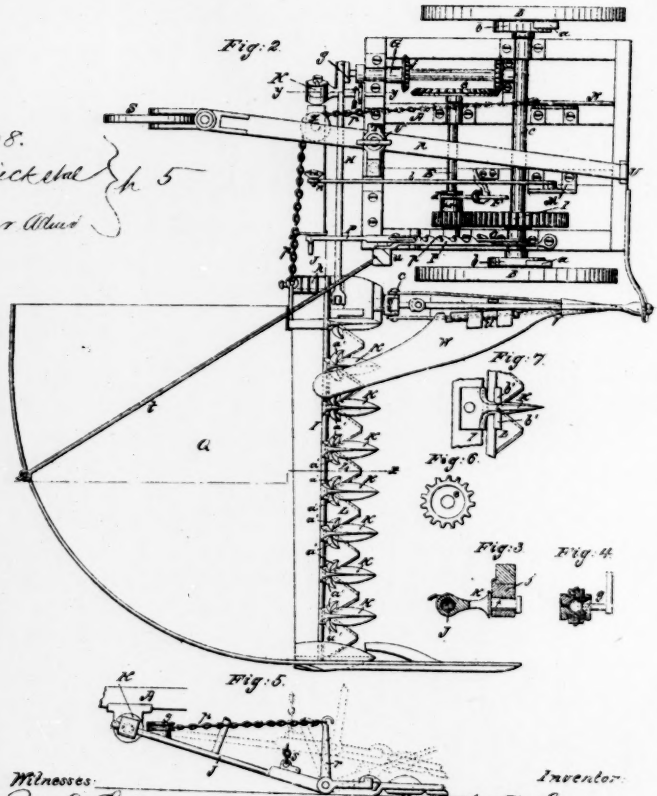

Witnesses:
Jno E. Lyon
C. L. Tyler

Inventor:
A. B. Graham
By Munn & Co.
Attorneys.

A. B. GRAHAM.

2 Sheets—Sheet 1.

Harvester.

No. 67,041.

Patented July 23, 1867.

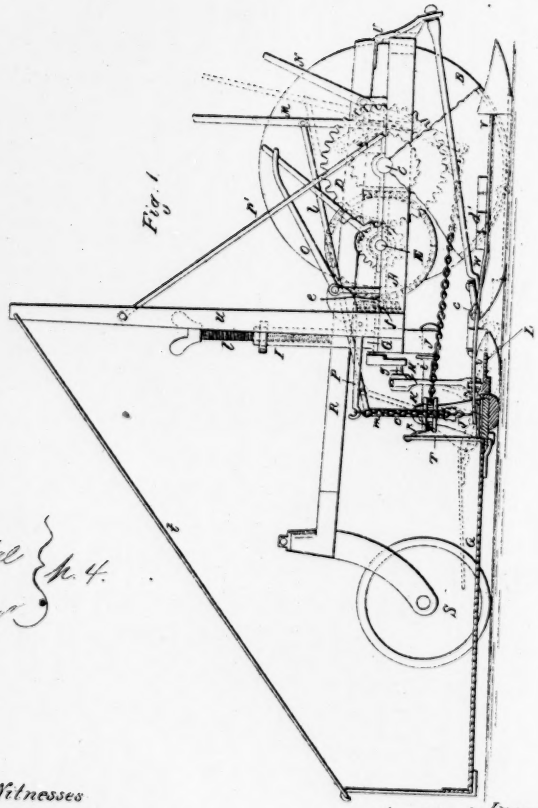

No. 108.
McCormick et al
v.
Whitmer, Attw.
p. 4.

Witnesses
Wm E. Lyons
C. L. Goliff

Inventor.
A. B. Graham
By Munn & Co.
Attorneys.

be retained at any desired point within the scope of its movement by means of a rack-bar, P'.

3 The grain-platform Q is attached to the back part of the finger-bar I, and is supported at its rear by a wire or rod, *t*, attached to an upright, *u*, on the main frame A.

R is a bar, the front end of which is attached, by a hinge or joint, *v*, to the front end of the main frame A. This bar R extends some distance back of the main frame A, and has a caster-wheel, S, at its back end, and said bar passes through a yoke, T, on the rear part of the main frame, a screw, U, passing vertically through the top of the yoke, and bearing on the bar R. By turning the screw U it will be seen that the back part of the main frame A may be adjusted higher or lower, as desired.

From the above description it will be seen that, in case an obstruction presents itself to the inner end of the finger-bar I, the lever O is actuated, in order to raise said end of the finger-bar, and if an obstruction presents itself to the outer end of said bar the lever N is actuated.

The fingers *k* have angular or oblique arms *a' a'* at the back parts of their upper ends, as shown in Fig. 2, and they have arms *b' b'* at the back parts of their lower surfaces, which arms project laterally at right angles from the fingers, as shown in Fig. 7. These arms serve to prevent the grass or straw being drawn behind the sickle L, or between it and the fingers, and therefore effectually prevent the choking or clogging of the same.

This machine will work equally as well upon inclined as upon horizontal ground.

To the inner end of the finger-bar I there is attached, by a joint, *c'*, a clearer, V, which is provided with a wing, W, the latter being attached to the former by a joint, *d'*. This clearer, with its wing attached, gathers the grass or grain at the front part of the right-hand side of the main frame, and brings it within the scope of the sickle.

This sickle may be of the ordinary reciprocating kind, and therefore does not require a minute description.

I do not claim the connecting of the finger-bar I to a bar, J, by a joint, *h*, for that has been previously done; but,

Having thus described my invention, what I do claim as new, and desire to secure by letters patent, is—

1. The clearer V, when attached to the inner end of the finger-bar I, and provided with the wing W, substantially as and for the purpose set forth.

2. The oblique arms *a' a'* at the upper parts of the fingers *k*, in connection with the arms *b' b'* at their under sides, substantially as and for the purpose specified.

ALVARO B. GRAHAM.

Witnesses:
JOHN C. CLARKSON.
D. N. BARKER.

(Here follow diagrams marked pp. 4 & 5.)

6 UNITED STATES PATENT OFFICE.

ALVARO B. GRAHAM, of Waukegan, Illinois.

Improvement in Harvesters.

Specification forming part of Letters Patent No. 74342, dated February 11, 1868.

To all whom it may concern:

Be it known that I, Alvaro B. Graham, of Waukegan, in the *city* of Lake and State of Illinois, have invented certain new and useful improvements in harvesters for reaping and mowing, and — that the following is a full, clear, and exact description of my invention.

The objects of the improvements which constitute the invention set forth in this patent are to obtain a greater capacity of movement in a floating finger-beam, while retaining its connection with a gearing-carriage, that is drawn forward by a stiff tongue; to facilitate the raising and lowering of the finger-beam; to improve the operation of the cutting apparatus; and to transmit motion from the gearing-carriage to a reel connected with a finger-beam, that rises and falls independently of the gearing-carriage.

To these ends the first of my improvements consists of the combination of the finger-beam with the gearing-carriage by means of a vibratable link extending crosswise to the line of draft, a draft-rod extending parallel with the line of draft, and two swivel-joints, the one for the vibratable link, and the other for the draft-rod, so that the finger-beam can rise and fall at either end, and rock forward or backward independently of the gearing-carriage, while maintaining its connection with it.

My next improvement consists of the combination of the finger-beam, gearing-carriage, vibratable link, draft-rod, and swivel-joints, with an arm connected with the finger-beam, to enable it to be rocked for the purpose of setting its guard-fingers at any desirable inclination to a horizontal line.

My next improvement consists of the combination of the gearing-carriage, rocking finger-beam, and reciprocating cutter, with a crank-shaft on the gearing-carriage for driving the cutter, a connecting rod extending between the crank-wrist of the said crank-shaft and the cutter, and a swivel-joint at the cutter for the connecting rod, so that the connection between the crank-wrist on the gearing-carriage and the cutter on the finger-beam does not obstruct the rocking of the finger-beam.

My next improvement has reference, specially, to the raising of the grain end of a finger-beam, which is connected with the gearing-carriage by a vibratable link; and consists of the combination of the gearing-carriage, the finger-beam, and the vibratable link (that connects the two, while permitting the finger-beam to move independently of the carriage) with a grain-wheel that is movable in a vertical direction relatively to the finger-beam, and with a lifting-

connection extending from the bearing of the said wheel to the gearing-carriage, so that by operating upon said lifting-connection the grain end of the finger-beam may be raised or lowered relatively to the grain-wheel, and, consequently, to the ground on which that wheel runs.

My next improvement has reference to the raising of both ends of the finger-beam in a machine in which it is free to move independently of the gearing-carriage; and consists of the combination of the gearing-carriage, finger-beam, vibratable link, grain-wheel, and lifting connection, extending from the grain-wheel, as hereinbefore specified, with a lifting chain or connection connecting the inner or stubble end of the finger-beam with the gearing-carriage, so that by operating the said two connections both ends of the finger-beam may be raised or lowered; or by operating one or other of the said two connections the corresponding end of the finger-beam may be raised or lowered without the other.

My next improvement consists of the combination of a lifting-lever upon the gearing-carriage with the lifting-connections, connected with the finger-beam and grain-wheel, by means of **V**-formed nothes, that permit the lengths of the said connections to be readily adjusted by changing the links of the chains that are engaged in said **V**-formed notches.

The object of the next improvement is to prevent the casting off of the belt that imparts motion from a shaft upon the gearing-carriage to a reel that moves independently thereof, when the machine is passing over rough ground; and it consists of the combination of the reel, arranged to move with the finger-beam, the gearing-carriage, a radius-bar connecting the reel-shaft with the gearing-carriage, a guiding belt-pulley arranged upon the gearing-carriage, and a second guiding belt-pulley arranged upon the radius-
7 bar. In this combination one of the said two guide-pulleys directs the driving member of the belt into its proper line, while the other guide-pulley directs the slack member of the belt into its proper line, so that the belt does not tend to cast itself off the driving-pulley or the reel-pulley.

The object of the next improvement is to insure the free rocking of the finger-beam for the purpose of raising or depressing the points of the guard fingers, when the machine is used for reaping grain; and consists of the combination of the finger-beam with the gearing-carriage by a swivel-joint, and with the raking-platform by hinge-connections, so that the finger-beam may be rocked relatively to both the gearing-carriage and the raking-platform with which it is connected.

The object of the next improvement is to maintain the raking-platform at its proper inclination or level, notwithstanding the rocking of the finger-beam, with which it is connected; and it consists of the combination of the raking-platform of the machine with the finger-beam by hinge-connections, and with the gearing-carriage by an upright stay, and a bar or link connecting the gearing-carriage and the upper end of said stay. The upright stay forming a part of this combination is, by preference, the inner reel-post, and

the bar or link is, by preference, the radius-bar, that also connects the reel with the gearing-carriage, so that the said reel-post and radius-bar are enabled to perform duplex functions.

The object of my next improvement is to insure the free rocking of the finger-beam relatively to the raking-platform, notwithstanding the support of the outer ends of the finger-beam and platform by a grain-wheel; and it consists of the combination of the finger-beam with the grain-wheel, through the intervention of a hinge-connection, which is, by preference, one of the same hinge-connections which combines the raking-platform with the finger-beam, and the grain-wheel is, by preference, a caster-wheel.

The object of my next improvement is to enable the clutch-connection between the crank of the cutter and the driving-wheel to be operated with facility; and consists of the combination of the movable member of the clutch with the clutch lever, composed of two parts, which are a lever proper, and a yoke that engages in a groove in the said movable member.

My improvements may be embodied in a machine having the finger-beam arranged in advance of the axial line of the shaft or arbor of the driving-wheel, or arranged in the rear of that axial line. In the former case the vibratable link that connects the finger-beam with the gearing-carriage will be arranged in advance of the driving-wheel, and in the latter case in the rear of the driving-wheel. In the former case also the rod hereinbefore called a "draft-rod" (because the strain to which it is subjected is a pulling-strain) becomes a pushing or thrust rod, and connects the inner end of the finger-beam with the rear of the gearing-carriage. In the former case the radius-bar for the reel and raking-platform connects with the rear end of the gearing-carriage, and in the latter case with its front end.

I prefer to construct a harvesting-machine with the finger-beam in the rear of the line of the axle of the driving-wheel, and as a description of such a machine, perfected by my improvements, will enable them to be fully understood, all of my improvements are embodied in the harvesting-machine of that description, which is represented in the accompanying drawings, and which is an illustration of the best mode which I have thus far devised of embodying them in a working-machine.

Figure 1 represents a plan of the machine. Fig. 2 represents an elevation of the stubble side thereof. Fig. 3 represents a vertical transverse section thereof at the line *x x* of Fig. 1. Fig. 4 represents a similar section at the line * * of Fig. 1. Fig. 5 represents an elevation of the grain side of the machine. Fig. 6 represents a front view of certain parts of the machine, designated by the same letters as are applied to the same parts in the other figures. Fig. 7 represents a plan of a part of the finger-beam with the divider used in mowing, and the platform and grain-divider disconnected; and Figs. 8, 9, and 10 represent a plan and side view and cross-section of the guard-fingers drawn upon a larger scale than the preceding figures; and Figs. 11 and 12 represent views of the clutch-lever of the crank-shaft, also drawn upon a larger scale.

This machine is what is commonly called a "combined machine," and is adapted to reaping and mowing. When used for the former purpose it is arranged as represented in Figs. 1 to 6; when used for the latter purpose certain of its parts are removed, as hereinafter stated, and a grass-divider is substituted for the grain-divider at the outer end of the finger-beam.

The gearing which imparts motion to the sickle and reel of the machine is mounted upon a carriage, A, which is supported by two running or ground wheels, B B, and is provided with a tongue, C, to which the horses are hitched. The tongue is jointed to the gearing-carriage, and has an arm, *c*, which projects backward over said carriage to a standard, c^1, mounted thereon. The standard and arm are both pierced with holes, through which a bolt, c^2, is passed, by which the tongue is made fast, so that the tongue is then a stiff tongue; but the inclination of the tongue to the carriage may be varied by shifting the said bolt from one hole to another in the standard c^1, so as to vary the position of the rear end of the carriage with which the cutting apparatus is connected.

The running-wheels B B, by their revolution, impart motion to the cutter and reel of the machine. To this end they are
8 fitted to turn upon a shaft, D, with which each is connected by as pring-pawl, *d*, and a ratchet-wheel, *d'* (the latter secured to the shaft and the former to the running-wheel), so that the running-wheel that turns fastest acts as the driver. This shaft is fitted with a cog-wheel, E, whose teeth engage with those of a pinion, E^1, secured to a counter-shaft, D^1, and this counter-shaft is fitted with a beveled wheel, E^2, whose teeth engage with those of a beveled pinion, E^3 (represented in dotted lines in Fig. 1), that is mounted upon the crank-shaft D^2, with which the cutter is connected. The hub of the pinion E^3 is fitted to turn upon the crank-shaft D^2, and is connected with it by means of a saw-toothed clutch, one member (*e*) of which is arranged to slide longitudinally upon the crank-shaft, but compelled to turn therewith by means of a pin or feather, while the other member of the clutch is formed upon the hub of the pinion E^3. The sliding-clutch member *e* is controlled by a lever, *f*, which is composed (see Figs. 11 and 12) of two parts, the lever proper and a yoke, f^3, which enters a groove in the sliding-clutch member *e*, and is pivoted to the frame of the machine, with its upper end passing through a slotted plate, f^1, fitted with two notches, in one or the other of which the lever may be engaged for the purpose of holding the clutch into gear or out of gear. In the former case the crank-shaft D^2 and the cutter are caused to operate as the running-wheels turn. In the latter case the crank-shaft and cutter, being disconnected from the running-wheels, remain at rest. The requisite lateral play of the lever to permit its engagement and disengagement is obtained by constructing it to fit loosely upon its pivot, and a spring, f^2, is coiled upon the pivot to hold the lever engaged in either notch of the slotted plate f^1. The two parts of the clutch-lever are notched and fit loosely into one another; hence the yoke can play upon the lever proper to accommodate itself to the varying positions of the lever proper and sliding-clutch member.

The finger-beam G of the machine projects at one side of the rear end of the gearing-carriage A, and is fitted with guard-fingers H, through the slots of which a scalloped cutter, I, is arranged to reciprocate endwise. The end of this cutter that is nearest the gearing-carriage is connected with the crank-wrist *g* of the crank-shaft D^2 by means of a connecting-rod, J. The finger-beam is connected with the rear end of the gearing-carriage in the following manner: The end of the beam nearer the carriage is provided with a shoe, K, from which lugs *a a* project upward. These lugs are perforated to admit a joint-bolt, a^1, which connects the shoe with one end of a vibratable forked link, L, whose other end is connected by a swivel-joint, M, with a bracket, N, secured to the rear of the gearing-carriage. This swivel-joint is formed by a cross-head (*m*, Fig. 1^a), the center of which is bored transversely to permit a journal formed on the end of the forked link L to turn in it. The ends of the cross-head *m* are formed into journals, which turn in bearings upon the bracket N. Hence the finger-beam can both rise and fall freely at either end, and rock forward and backward without twisting the link that forms its connection with the gearing-carriage. Moreover, the axis of the cross-head *m* of the swivel-joint is arranged in line, or thereabout, with the axis of the crank-shaft D^2, that imparts motion to the cutter, so that such rising or falling, or rocking, does not materially change the distance between the crank-shaft and the cutter. The shoe K of the finger-beam is connected also with the front end of the gearing-carriage by a draft-rod, O, and the connection between the rear end of this draft-rod and the said shoe is a swivel-joint, M′, of which the joint-pin a^1 of the vibratable link L is the longitudinal axis, and its T-head m^1 the horizontal axis. This swivel-joint, therefore, while maintaining a firm connection with the draft-rod, gives free play for both the longitudinal and rocking movements of the finger-beam. Hence, when the machine is used for cutting grass, the said finger-beam may be left free, not only to rise and fall at either end, but also to rock or to be rocked forward and backward, so that the points of its guard-fingers incline toward or from a horizontal plane.

In order that the finger-beam may be rocked by the conductor of the machine, the vibratable link L is fitted with an arm, *l*, whose upper end is connected by a rod with the lower end of a lever, P, that is pivoted to the gearing-carriage near its forward end. The upper end of this lever P extends within the reach of the driver, who sits upon the driver's seat Q, so that he may rock the finger-beam by moving the said lever to and fro. This rocking lever P is fitted with a spring-bolt, whose end can engage in any one of a number of notches formed in a segment, R, which is attached to the gearing-carriage concentrically with the pivot of the rocking lever, so that the finger-beam may be fastened in the desired position by the engagement of the spring-bolt in the appropriate notch. The rocking lever is fitted with a lever-handle, *p*, and rod connecting with the spring-bolt, by which the spring-bolt may be withdrawn from the notched segment and held disengaged therefrom during the movement of the lever. In order that the connection between

the cutter on the finger-beam and the crank-shaft on the gearing-carriage may not obstruct the free rocking of the finger-beam, the connecting-rod J is connected with the cutter I by means of a swivel-joint, S, consisting (see Fig. 1[b]) of a head, s, that is pivoted to the cutter-stock (by a shank that extends lengthwise therewith, and turns in an ear, s^1, secured to the end of the cutter-stock) and of a cross-pivot, s^2, that passes through the said head and through two ears formed upon the connecting-rod J.

9 The outer end of the finger-beam is sustained by a grain-wheel, T, which is pivoted to an arm, T^1, that projects from and is constructed to turn upon an upright arbor, T^2, so that the said grain-wheel operates as a caster-wheel. This arbor T^2 is secured to the frame-work U of the divider U^1.

In order that the finger-beam may be raised and lowered while the machine is in operation, the arbor T^2 of the caster-wheel is constructed to slide up and down in the hubs of the caster-arm T^1, and the said arm is connected with the shorter arm of a bent hand-lever, P′, that is pivoted upon the gearing-carriage by a flexible connection consisting of a chain, h, rod h^1, and a cord, h^2, the first of which passes around a sheave mounted upon the vibratable link L, and the last of which passes around a sheave, h^3, secured in the divider frame-work U, so that the forward movement of the bent hand-lever or lifting-lever P′ pulls the divider end of the finger-beam upward, and causes it to approach the hub of the caster-wheel arm T^1, thereby compelling it to rise from the ground.

In order that the inner end of the finger-beam may be correspondingly raised, the vibratable link L is provided with a chain, h^4, which is applied to the same lifting-lever P′ as the chain leading from the outer end of the platform, and as this second chain is attached to the link near its middle, so that the finger-beam is raised twice as much as the part of the link at which the attachment is made, the chain is applied to the middle of the bent arm of the lifting-lever.

In order that the chains may be adjusted so as to vary the position of the finger-beam from any required mean distance from the ground, they are not made fast to the lifting-lever, but are caught in V-formed notches w w', from which they can readily be removed and be as readily replaced. The lifting-lever is provided with a spring-bolt, which is arranged to engage in any one of a series of notches formed in a segment-plate, R′, so as to secure the lifting-lever, and consequently the finger-beam G with which it is connected, in any desired position. A lever-handle, p', also is applied to the lifting-lever to control the spring-bolt.

The guard-fingers H have a peculiar form, the upper faces of their lower members being made concave, as represented at n, Fig. 10. This construction permits the cutter or sickle to bear on the rims of the fingers, the edges of which are kept sharp by the constant attrition, so that the cutting-edges of the fingers are made self-sharpening. The lower members of the fingers are also constructed with spurs n' n' at their sides made in one piece with them, the spurs being long enough to prevent the grain or grass from passing back-

ward along the side of the finger into the notches of the scallops of the cutter, but not so long as to meet and form a continuous bearing, which would involve the necessity of fitting their adjacent ends accurately to each other. This mode of preventing the backward passage of the material being cut is an improvement upon that in which the effect is produced by riveting a long bar to the under members of the fingers, as it involves less expense in construction.

The raking-platform W of the machine (when grain is to be harvested) is attached to the finger-beam G. The reel V is supported by this platform, so as to move with the finger-beam when it is raised or lowered. The gudgeon of the outer end of the reel is received in one of a series of holes formed in a reel-bearer, X, which projects forward from a short reel-post, Y, secured to the platform at its outer rear corner. The reel-bearer is pivoted at its rear end to the head of this reel-post, and is provided with a toothed plate, Y^1, which engages in the spaces between the teeth of a segment, Y^2, secured to the reel-post. The segment has a curved slot in it, through which a bolt is passed, which also passes through the reel-bearer, so as to hold the toothed plate and bearer to the segment. The inclination of the reel-bearer may be varied for the purpose of raising or lowering the outer end of the reel by slacking the nut of the bolt, and engaging the toothed plate with others of the spaces between the teeth of the segment Y^2. The shaft of the reel is supported at its inner end by a reel-post, X^1, erected upon the inner forward corner of the platform. The reel-shaft is fitted with a belt-pulley, Z, to which a round belt, *q*, is applied to cause it to revolve. This belt is put in motion by being applied to a second belt-pulley, Z′, that is secured to the shaft D of the running or ground wheels B B.

In order that the tautness of the belt may not be materially affected by the change in the position of the reel, due to its movement with the finger-beam and platform relatively to the gearing-carriage, the bearing *r* of the inner end of the reel-shaft, although supported by the inner reel-post X^1, is connected with the forward end of the gearing-carriage by a radius-bar, X^2, so as to maintain its distance therefrom, although it rise and fall, and the belt *q*, instead of being conducted directly from the pulley Z′ on the driving-shaft D to the reel-pulley Z, is conducted forward and backward to and from two supplementary belt-pulleys, *z z′*, that are located at or near the pivot *i* that connects the radius-bar X^2 with the gearing-carriage, one pulley, *z*, being pivoted to the gearing-carriage, and the other, *z′*, to the radius-bar. As these pulleys are for all practical purposes, substantially at the center of movement of the reel in rising and falling with the radius-bar, such movement does not materially affect the belt *q*, and the latter retains its tautness, while the rising and descent of the reel is not affected by the transmission of power to it.

On the other hand, the pulley *z*, located upon the gearing-carriage, maintains always the same relation to the driving-pulley Z′, and therefore guides the driving member of the belt properly to that pulley, notwithstanding the change of position of the reel, caused by the unequal rising or descent of its two ends,

while the other pulley z', being located on the radius-bar X^2, maintains the same relation to the reel-pulley Z, however the reel and the said pulley may vary its position relatively to the gearing-carriage, and therefore guides the slack member of the belt properly to the reel-pulley, notwithstanding its change of position. Hence the pulleys z z' are guide-pulleys to guide the belt properly, and thereby prevent it from being cast off by the movement of the reel with the finger-beam in passing over uneven ground.

Another and equivalent arrangement of the belt and pulleys for maintaining the tautness of the belt (but not for preventing the casting of it off the pulleys) is represented at Fig. 3ª. In this case the radius-bar X^3 is pivoted upon a counter-shaft, D^3, which is carried by the gearing-carriage, and is fitted with a pulley, z, from which the belt q proceeds to the pulley Z on the reel-shaft. The counter-shaft D^3 on the gearing-carriage may be caused to revolve by a belt encircling pulleys secured to the shaft of the running-wheels and this counter-shaft, or in any other convenient manner.

The inner end of the reel may be set more or less forward of the finger-beam by shifting its bearing r forward or backward on the radius-bar, and the radius-bar X^2 is pierced with a series of holes, to which the bolt that holds the bearing r of the reel-shaft may be transferred when that bearing is shifted forward or backward. The inner end of the reel may be raised or lowered by turning the radius-bar X^2 up or down on its pivot i, and the reel-post X^1 is pierced with a series of holes, to one of which the bolt that holds the radius-bar to it may be transferred when that radius-bar is turned to a different position.

In order that the finger-beam may be rocked to depress or raise the points of the guard-fingers when the machine is used for reaping grain, the raking platform W is not attached rigidly to the finger-beam, but is attached to it by hinges g^4 g^4, Fig. 1, so that the finger-beam may be rocked while the platform retains its position, and the platform is retained in its proper position by being connected with the gearing-carriage by the inner reel-post X^1 and radius-bar X^2, which thus act as stay and link to hold the platform in addition to supporting the reel; and in order that the inner reel-post may so operate, its lower end is firmly connected with the raking-platform W by a metal shoe, x^4. The rocking of the finger-beam independently of the raking-platform W is insured by the connection of the caster or grain wheel T with the said platform, so that the said wheel is combined with the finger-beam through the intervention of the hinge or hinges g^4, which combine the platform with the finger-beam. Hence the rocking of the finger-beam is not prevented by its combination with a raking-platform or a grain-wheel, but is under the control of the driver, who effects it by means of the rocking-lever P, as may be found expedient to cut the grain at a greater or less distance from the ground, or to raise up lodged grain. Moreover, as the weight of the outer half of the platform is sustained by the grain-wheel instead of by the finger-beam, the latter is relieved from much strain, and is not so apt to vibrate or spring as it otherwise would be.

When the machine is to be used for cutting grass, the reel V, radius-bar X^2, and platform W, with the reel-supports, divider-frame, and caster-wheel T, are removed from the finger-beam G, and a small grass-divider with a track-clearer is bolted to the outer end of the finger-beam in the place of the outermost finger, as represented at U^2, Fig. 7. The rocking of the finger-beam is then under the control of the driver, who effects it by means of the rocking lever P, as may be found expedient, to conform to the surface, over which the cutter is passing. When used for reaping grain, the grain-divider U^1, Figs. 1, 4, and 5, which projects laterally beyond the end of the finger-beam, gathers in a mass of standing grain wider than the breadth of the cutting apparatus, and the grain at the stubble side is correspondingly gathered in by a grain-guard, U^3, that is supported by the inner reel-post X^1, and consequently moves up and down with the platform and cutting apparatus. When the machine is used for cutting grass, the grass-divider U^2, being at the end of the finger-beam, gathers in no more grass than the cutting apparatus can advantageously cut, and the swarth is narrower than when cutting grain. When the machine is used for reaping, the driver sits upon the seat Q, and the raker upon the end of the spring-frame Q^1 with his feet resting on a removable foot-board Q^2, which is detached from the machine when the machine is used for mowing.

Having thus described a machine embodying all my improvements, I declare that I do not limit my new combinations to the particular forms represented in the drawings, but intend to vary the form and construction of the members of the combinations, or to use equivalent members in their places, as circumstances may render expedient.

What I claim as my invention, and desire to secure by letters patent, is—

1. The combination, as set forth, in a harvester, of the finger-beam with the gearing-carriage by means of the vibratable link, the draft-rod, and the two swivel-joints M and M^1, so that the finger-beam may both rise and fall at either end, and rock forward and backward.

2. The combination, as set forth, in a harvester, of the finger-beam, gearing-carriage, vibratable link, draft-rod, swivel-joints, and arm, by which the rocking of the finger-beam is controlled.

11 3. The combination, as set forth, in a harvester, of the gearing-carriage, rocking finger-beam, vibratable link, reciprocating cutter crank-shaft on the gearing-frame, connecting-rod, connecting said crank-shaft with the cutter on the rocking finger-beam, and swivel-joint at the cutter.

4. The combination, in a harvester, of the gearing-carriage, finger-beam, vibratable link, grain-wheel, and lifting-connection for the grain end of the finger-beam, substantially as set forth.

5. The combination, as set forth, in a harvester, of the gearing-carriage, finger-beam, vibratable link, grain-wheel, lifting-connection, and lifting-connections for the inner or stubble end of the finger-beam, so that each end of the finger-beam may be raised or lowered relatively to the gearing-carriage.

A. B. GRAHAM.

HARVESTER.

No. 74,342. Patented Feb. 11, 1868.

No. 108.
McCormick et al
v
Whitmer, Adm'r
p. 15

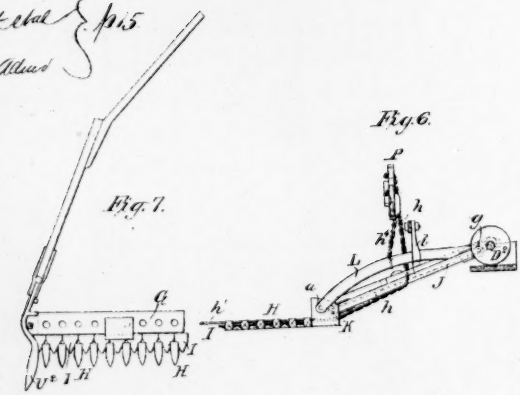

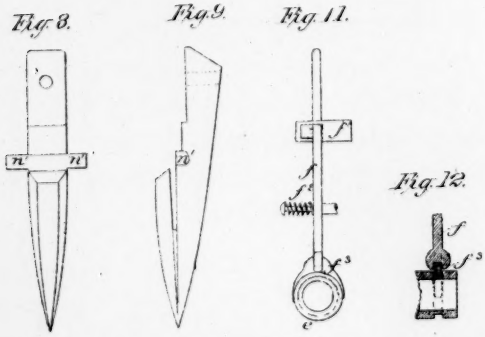

Witnesses:
F. W. Wurster
R. J. Cunningham

Inventor.
A. B. Graham
by his Attorney
E. S. Renwick

A. B. GRAHAM.

HARVESTER.

No. 74,342. Patented Feb. 11, 1868.

Fig. 4.

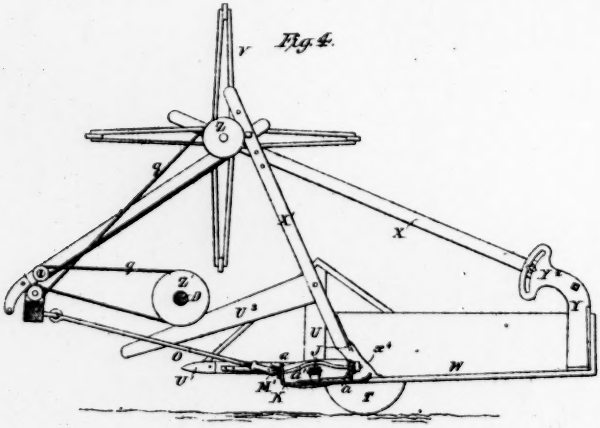

No. 108.
McCormick et al
v.
Whitmer, Adm^r
p 14

Fig. 5.

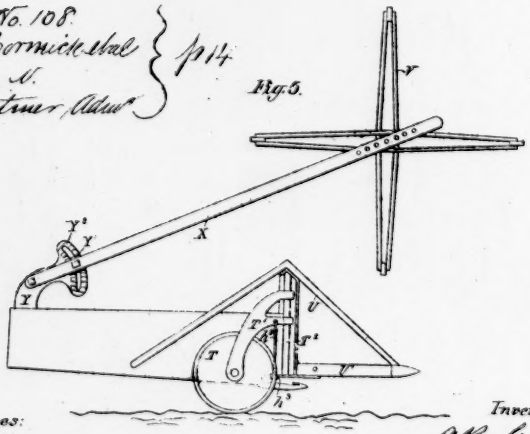

Witnesses:
F. W. Wurster
H. J. Cunningham

Inventor:
A. B. Graham
by his Attorney
E. S. Renwick

4 Sheets—Sheet 2.

A. B. GRAHAM.

HARVESTER.

No. 74,342. Patented Feb. 11, 1868.

Fig. 2.

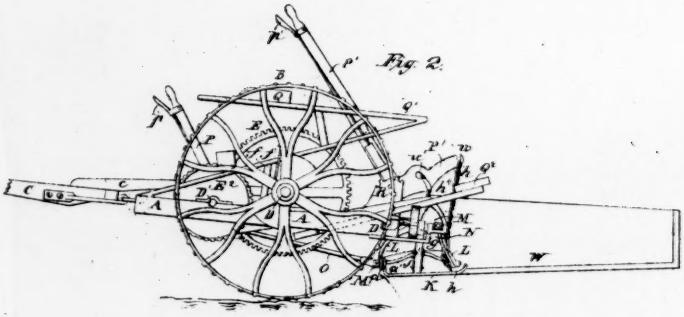

No. 108
McCormick et al
v.
Whitmer et al
p 13

Fig. 3.a

Fig. 3.

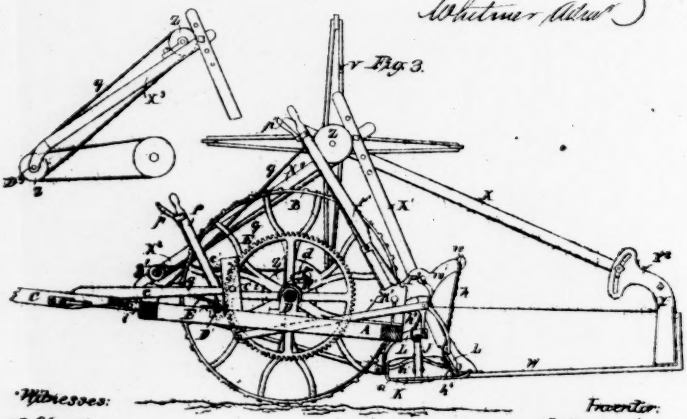

Witnesses:
E. H. Manatee
W. J. Cunningham

Inventor:
A. B. Graham
by his attorney
E. F. Brinsmade

12

4 Sheets—Sheet 1

A. B. GRAHAM.

HARVESTER.

No. 74.342.

Patented Feb. 11, 1868.

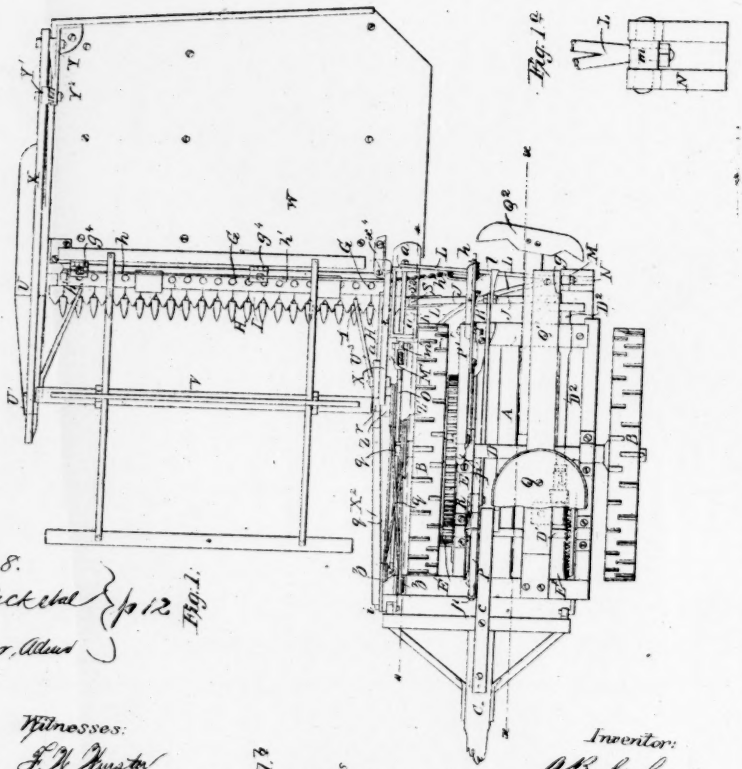

Fig. 1.

Fig. 1a

No. 108.
McCormick et al
v
Whitmer, Adm'r
p 12

Witnesses:
F. W. Wurster
R. J. Cunningham

Fig. 1b

Inventor:
A. B. Graham
by his Attorney
E. S. Renwick

6. The combination of the reel, arranged to move with the finger-beam, the gearing-carriage, radius-bar, and two guide-belt pulleys for the driving and slack members of the reel-belt, one of said guide-pulleys being arranged upon the gearing-carriage, and the other upon the radius-bar, substantially as set forth.

7. The combination, as set forth, of the finger-beam, gearing-carriage, swivel-joint M between the finger-beam and gearing-carriage, raking-platform, and hinge-connections between the finger-beam and raking-platform.

8. The combination of the raking-platform, finger-beam, hinge-connections, gearing-carriage, upright stay, and link, substantially as set forth.

9. The combination, as set forth, of the finger-beam with the grain-wheel and platform through the intervention of a hinge-connection.

10. The combination of the movable member of the clutch (for throwing the cutter-crank out of or into gear) with a clutch-lever composed of two parts, connected by notches, substantially as set forth.

In witness whereof I have hereto set my hand this 28th day of January, A. D. 1867.

ALVARO B. GRAHAM.

Witnesses:
D. N. BARKER.
GEO. W. DIVER.

(Here follow diagrams marked pp. 12, 13, 14, & 15.)

[Endorsed:] Supreme Court U. S. 1888, October term. No. 108. Cyrus H. McCormick *et al.*, app'ts, *vs.* Peter Whitmer, adm'r of Hugh Graham, dec'd. Stipulation of counsel and addition to record.

[Stamped:] Office Supreme Court U. S. Filed Oct. 5, 1888. James H. McKenney, clerk.

Supreme Court of the United States.

OCTOBER TERM, 1888.

No. 108.

CYRUS H. McCORMICK, NETTIE FOWLER McCORMICK, EXECUTOR AND EXECUTRIX OF CYRUS H. McCORMICK: LEANDER J. McCORMICK, AND ROBERT H. McCORMICK,

Appellants.

vs.

PETER WHITMER, ADMINISTRATOR OF HUGH GRAHAM,

Appellee.

BRIEF FOR APPELLANTS.

ROBERT H. PARKINSON,
JOSEPH G. PARKINSON,
Counsel for Appellants.

Robert Clarke & Co., Printers, Cincinnati.] [*November, 1888.*

Supreme Court of the United States.

OCTOBER TERM, 1888.

Cyrus H. McCormick, Nettie Fowler McCormick, Executor and Executrix of Cyrus H. McCormick; Leander J. McCormick, and Robert H. McCormick,

Appellants,

No. 108.] *vs.*

Peter Whitmer, Administrator of Hugh Graham,

Appellee.

Appeal from Circuit Court of the United States for Northern District of Illinois.

BRIEF FOR APPELLANTS.

STATEMENT.

This is an appeal in behalf of the defendants below in a suit in equity for infringement of a patent for "Improvement in Harvesters," granted Alvaro B. Graham Febrnary 11, 1868, No. 74,342.

The patent contains ten claims of which only the first two are in controversy. These two claims relate to the construction of the joined connection between the finger beam and the frame of the machine, by which the specification represents that the floating finger beam is given a

greater capacity for rocking backward and forward, that is, for a crosswise tilt that will tip the finger guards upward or downward. A crosswise tilt of this floating finger beam was common in the older machines, and the object of the modification recited in these claims is stated to be to give "a greater capacity of movement," and "to enable it to be rocked for the purpose of setting its guard fingers at any desired inclination to a horizontal line."

The bill was filed by Hugh Graham against Cyrus H. McCormick, Leander J. McCormick, and Robert H. McCormick, co-partners, of the city of Chicago. It recited the invention by Alvaro B. Graham, the issue of the patent, its assignment to the complainant August 12, 1870, charged infringement of the first and second claims, and prayed for an injunction and account of profits and damages. (*Rec., pp.* 10, 28.)

The defendants, by their answer (pp. 7, 14, and 18, Rec.) and proofs, insisted upon the following defenses:

First. That the complainant was not the inventor of the alleged improvement or any material part thereof.

Second. That the defendants had not infringed the patent or employed the alleged improvement claimed therein.

Third. That the features of their machine, by reason of which they were charged with infringement, were found in many prior patents, recited in the answer, and introduced in evidence (more particularly mentioned hereafter.)

Fonrth. That the patent was invalid for want of novelty, and that the alleged invention was set forth and described in various prior patents recited in the answer.

Fifth. That the patent was invalid by reason of the alleged invention having been in public use and on sale for more than two years before application therefor, with the knowledge and consent of the patentee.

Sixth. That the patent was invalid by reason of the alleged invention having been shown and described in a prior patent obtained by the same patentee under date of July 23, 1867; and by reason of the fact that the applica-

tion for the patent in suit was in fraud of the rights of the assignees under the first patent.

Seventh. That the patentee, having prior to the application for the patent of July 23, 1867, assigned that application and the invention to which it related, and the exclusive right to the machine exhibited therein (having at the time a claim in that application for the subject-matter here in controversy), could not lawfully, by subsequent independent application, obtain separate exclusive title to the part of the machine thus assigned, or convey such title to this complainant.

Eighth. That if the subsequent patent (that here in suit) were not altogether invalid, in so far as it related to the machine exhibited and described in the first, the assignees of the first patent had such interest or equities in the second as made them necessary parties.

Ninth. That complainant had not such title under the patent sued upon as to enable him to maintain this suit.

Tenth. That the defendants held a license under the Graham patent of July 23, 1867.

The answer also denied that the complainant had been in the enjoyment of the rights and interest purporting to be secured by the patent; denied that the same was of value; that the complainant was entitled to damages occasioned by the alleged infringement, or entitled to sue for and receive the same to his own use.

The court overruled the several defenses, and entered a decree for complainant under these two claims, referring the case to a master for an account of profits and damages (p. 53).

Upon reference to the master, after some inquiry into defendant's profits, complainant entered upon the record a waiver of profits, and confined the claim of recovery to "damages on the basis of a royalty or license fee." (*See p.* 426, *Rec.*)

Pending the proceeding before the master, Cyrus H. McCormick had died, and the representatives of his estate were brought in by bill of revivor (p. 55).

Complainant had never been a manufacturer of or

dealer in the machines in controversy, nor had he, either prior to or during the term of the infringement, any licensees manufacturing upon a royalty or paying tribute in any way under the patent. The machine shown in the patent appears to have been a commercial failure, and had been abandoned before the complainant acquired his title. No evidence was offered to show actual damage of any kind. Instead of this, resort was had to the plan of manufacturing *ex parte lite pendente* an *ex post facto* measure of recovery. After the adjudication of infringement in this case, and after the expiration of the term over which the account extends, complainant proceeded to effect settlements of other pending suits for amounts less than the cost of litigation. While several of these settlements were nominally at the same rate, no two instances were actually so. In all cases where any considerable number of machines were involved the settlements were made for lump sums governed by no rule except that, whatever the number of machines included, the settlement was always for a sum less than the cost of defense. Out of these settlements were selected several instances where the number of machines to be settled for was so small that a payment insignificant as compared with the cost of litigation would represent a large rate per machine, and in these exceptional cases there was executed an instrument reciting that the grantor "*demanded*" five dollars a machine for a certain number of machines theretofore sold, but "*accepted*" three dollars a machine if payment was made in accordance with the terms of the instrument. These instruments authorized such defendants to continue manufacture at the same rate (three dollars per machine) for the balance of the term of the patent, which was in no instance more than a few months; that is to say, about the time necessary to work off the machines on hand. In no case did the parties so settling bind themselves to continue to manufacture or sell. In each of these cases there was some other consideration in the transaction sufficient to account for the sum actually paid. In one of the several cases the party making the settlement, who was the president of the

company with which it was nominally made, was personally given an assignable shop-right under the patent, and his company was, by a separate instrument, released from the payment of one-half of the sum recited in the so-called license. In other cases only part of the machines that had been made and sold were included in the account, and others were released. In another case the complainant contemporaneously (without other consideration) agreed under bond to protect and hold harmless the grantees in the manufacture of a machine they were then making (not the Graham machine) against a patent owned by a stranger.

The circumstances under which these settlements were made, and the steps afterward taken by the complainant and his so-called licensees, show that these instruments were drawn and executed, not for the purpose of expressing any actual transaction between the parties to them, but solely with reference to their effect in establishing a measure of recovery against these defendants for an infringement that ended before the first of these settlements was made. The settlements which purported to be made upon the basis of this license fee, did not aggregate, in the amount of machines settled for and licensed, one per cent of the machines which complainant settled for and licensed for lump sums, comparatively small, but varying in amount, during the same period over which these so-called royalty settlements were made.

The master held that these exceptional transactions, thus selected and manipulated by the complainant, established against these defendants a measure of the complainant's damages suffered by reason of their manufacture and sale during a period which ended before the first of these settlements was made, and that the ninety-nine per cent of transactions in which complainant had granted releases for past and future at a comparatively insignificant rate per machine (under circumstances that were similar, except as to the interest or capacity of the grantees to defend), were not to be considered because they were recited as made at lump sums.

He therefore found upon this evidence that the complainant had an established royalty of $5 a machine; that it should equitably be reduced to $3 (none of these contracts had provided for the actual payment of more than $3 for such machines as were included), and awarded complainant as the damages for an infringement beginning in 1874 and ending in 1879 over $100,000. Only a small proportion of the machines manufactured by the defendants during this period were charged with infringement or included in the account.

The damages thus assessed for a modification relating to a subordinate adjustment in a complicated machine were shown in evidence to be several times the entire profit on the complete machines, which involved a large number of other inventions, and had owed their success in the market to the excellence of the machine in other respects, to the energy and business experience of the manufacturers, to their reputation in the market, built up through many years of enterprise and industry, and by many inventions of their own.

These damages were assessed in behalf of a complainant who never undertook to manufacture or sell a machine, either in his own behalf or through licensees, during any part of the term of infringement, and under a patent which the patentees and all his associates in the manufacture had been obliged to abandon as unprofitable many years before the alleged infringement began.

The device by which defendants were found to infringe was so different in its construction and in its properties, from that of complainant's patent, as to give a different capacity of adjustment to the machine, to which defendants attributed its success, and without which they insisted that it must have been abandoned, as the Graham was.

The master said in his report that he had entirely disregarded the compromise settlements, but, as there were no transactions in evidence in which this royalty purported to be paid simply for a license under this patent, other than those in which the transaction was in settle-

ment of litigation begun or threatened, this expression must be due to the master assuming that a sum paid for the settlement of a pending suit ceased to be a compromise settlement if the instrument which provided for its payment was so drawn as to recite that the amount paid was estimated as a certain rate per machine on the proportion of machines that were to be paid for.

The master also recited that, independent of these sales, "there is much testimony in the record to show that the value of the Graham invention was fully equal to the sums realized by the settlement sales of them."

There is not a syllable of evidence in the record upon which this statement can be predicated, or which tends to afford any affirmative measure of damage, independent of the transactions above mentioned.

But the "*value of Graham's inventions*" had been eliminated from the case by the disclaimer of profits and the express limitation of the claim of recovery to "damages on the basis of a royalty or license fee." The master does not pretend that there was any evidence to show that the complainant was in the way of realizing such value but for the infringement, or that the same was capable of realizing by any practical way of doing business, or that there is any evidence from which he can infer that the complainant has been damaged in that amount.

Defendants excepted specifically to the findings of the master. Their exceptions are recited under "Assignment of Error." They insisted that the complainant could not, pending the account, create the measure of recovery against the defendants for past infringement by the form of instrument which he forced upon other infringers as the condition of avoiding litigation; that such settlements did not tend to establish a royalty or afford any measure of damages even as against the subsequent infringers, much less against those whose infringement had ended before the first negotiation for such settlements were initiated; that if settlements for infringements were to be considered at all in fixing the measure of recovery against a stranger (which they deny), the complainant could not, by the form of in-

strument which he drew, select the one per cent of cases in which a small infringer had paid a large rate per machine in settlement, and exclude the ninety-nine per cent in which the larger infringers had paid a smaller rate per machine, so as to take the former as the multiplicand by which the defendants' machines were to be multiplied; that of the two classes the larger class, and that representing settlements with defendants who were better able to protect themselves, would be a fairer test, but that all these settlements were so obviously controlled by other considerations than the worth of the features in controversy, as well as so remote from the period in controversy, as to afford absolutely no evidence of damage, or of any established license fee; that the evidence affirmatively showed that the complainant had suffered no damage by reason of the manufacture and sale by defendants; and that the award should have been nominal damages only.

The court (without filing an opinion, or stating its reasons) overruled complainant's exceptions and confirmed the report, except as to that portion of interest which the master had assessed, and added interest upon the sum assessed, for the period between the date of the master's report and the decree of the court modifying the same. Judgment was thereupon entered for $85,353.60, together with costs. The defendants appealed, and now contest the several findings of the court, as well those embraced in the interlocutory as in the final decree.

Hugh Graham, the complainant, having died since appeal, his administrator has been brought in as appellee.

ASSIGNMENT OF ERROR.

Appellants respectfully submit that the court below erred:

First. In finding complainant's patent valid in respect to the first two claims thereof: whereas it should have found that the same was invalid for want of novelty, and for want of patentable invention; because the alleged in-

vention was in public use and on sale for more than two years prior to the application for patent; because the same had been exhibited and embraced in a prior patent procured by the same patentee, without restriction or reservation, and had been abandoned; because the proceedings in the application for such prior patent concluded the patentee from obtaining a subsequent patent therefor; and because the application for the patent in suit was fraudulent.

Second. In finding the first two claims and each of them infringed by defendants; whereas it should have found that there was no infringement.

Third. In finding that complainant had sufficient title to maintain this suit; whereas it should have found that William B. Warden and Cyrus B. Warden, assignees of the Graham patent of July 23, 1867, and of the machine therein represented, and all improvements thereon, were essential parties.

Fourth. In failing to find that defendants were entitled to make, use, and sell the machine exhibited and described in the Graham patent of July 23, 1867, and all parts thereof.

Fifth. In overruling each of the following exceptions of defendants to the master's report; whereas it should have sustained the same and each of them, to wit:

> "And now come the defendants in the above entitled cause, by George Harding and John R. Bennett, their solicitors, and take exceptions to the report of the master filed herein on the 21st day of July, A. D. 1884, viz:
>
> "1. For that the said master has found that the testimony establishes a royalty or license fee of three dollars for each machine manufactured and sold by the defendants containing the peculiar invention of the complainant mentioned and described in the first and second claims of the complainant's patent.
>
> "2. For that the said master has refused to allow the defendants a credit of $57,777.50, amount paid James A. Saxton for royalties upon the machines included in this accounting.
>
> . . . . . .

"4. For that the said master has refused to find 'that the damages sustained in this case are merely nominal.'

"5. For that the said master has found 'that interest should be allowed at the rate of six per cent per annum upon the sum herewith reported from the date of the announcement of the decision of the court establishing the rights of the complainant,' to wit, the thirteenth day of March, A. D. 1880.

"6. For that the said master has found and reported that there is due the complainant from the defendants herein the sum of eighty-one thousand, six hundred dollars as principal, and the sum of twenty-one thousand, three hundred and twenty-four dollars and eighty cents as interest thereon, making a total of one hundred and two thousand, nine hundred and twenty-four dollars and eighty cents.

"Whereas the said master should have found and reported:

"1. That the complainant had no established royalty or license fee.

"2. That the complainant is entitled to and can recover from the defendants herein nominal damages only."

Sixth. In awarding complainant damages at the rate of three dollars a machine; whereas it should have found that complainant had failed to show any damages sustained by reason of the alleged infringement.

Seventh. In allowing interest from the date of the master's report; whereas it should have found that the master's award being found in part erroneous, no interest could be assessed pending the ascertainment of damages by the court.

Eighth. In awarding damages against the estate of Cyrus H. McCormick; whereas it should have held that damages for trespass charged to have been committed by said Cyrus H. McCormick, could not be recovered in this suit.

Ninth. In that it did not find that complainant was

not entitled to recovery in this suit, and dismiss the bill of complaint.

ABSTRACT OF ARGUMENT.

First. The Device in Controversy.

A common type of connection between the floating finger beam and gearing carriage, by which the tilting movements were secured prior to the Graham invention, consisted of a vibratable link crosswise of the line of draft, a draft rod parallel with the line of draft, and two swivel joints, one connecting the vibratable link with the gearing carriage, and the other in the draft rod, enabling the finger beam to rise and fall at both ends, and also to swing backward and forward (that is, so as to tilt the fingers upward and downward), upon a pivotal joint placed behind the beam, the weight of the beam in front of this pivot tending to hold its front edge upon the ground while it was free to tip or swing upward and downward automatically and could also be tipped upward by means of a lever, operated by the driver, loosely connected, so that while it could lift, it could not depress or hold down the guard fingers. This lever could be set to sustain the beam against tilting below an arbitrary inclination, but could not limit its upward movement, or force its downward movement. The forward or downward tilt was limited by contact of the guard fingers with any obstacle sufficient to resist the weight of the beam.

The essence of the modification upon this prior type, embraced in the claims in controversy, consisted in transferring the pivotal joint, upon which this crosswise tilting or rocking turned, from the rear to the front of the beam, and mounting on the link a rigid arm which, when rocked backward and forward, imparted a reciprocating rocking movement to the bar, so that the guards could be positively tilted both downward and upward, and set or controlled at any desired inclination, dipping the fingers under any obstacle over which they would ride if left free. This transposition of the pivotal point of oscillation, while converting the swinging into a rocking movement, and adding to its capacity for arbitrary adjustment and control, deprived the beam of its capacity for automatic adaptation to the surface over which

it travels, and necessitated its being locked positively against any upward or backward tilt. The construction was, therefore, necessarily such that it was automatically locked and rigidly supported at whatever angle it was placed, and could neither recede, rise, nor fall therefrom, without the intervention of the operator.

The defendants have adhered to the former type of adjustment, which has always been a success; and have abstained from the Graham type, which was necessarily a failure, and which was abandoned as such by Graham and his associates soon after the patent issued.

Complainant's patent (which was applied for February 11, 1867, and issued February 11, 1868), states that the machine therein referred to "is what is commonly called a 'combined machine,' and is adapted to reaping and mowing (*p. 7, Stip. end of Rec.*)

The defendants are not charged with having used the machine therein shown, but with having used on a different machine a mode of attaching and tilting the finger beam which complainant insists infringes the first two claims. These claims are as follows:

1. The combination, as set forth, in a harvester, of the finger-beam with the gearing-carriage by means of the vibratable link, the draft-rod, and the two swivel-joints M and M′, so that the finger-beam may both rise and fall at either end, and rock forward and backward.

2. The combination, as set forth, in a harvester, of the finger-beam, gearing-carriage, vibratable link, draft-rod, swivel-joints, and arm, by which the rocking of the finger-beam is controlled.

The object of the invention, so far as the subject of these claims is concerned, is stated at the beginning of the specification as

"to obtain a greater capacity of movement in a floating finger beam while retaining its connection with a gearing carriage, that is drawn forward by a stiff tongue."

The finger beam (often called finger bar) of a mowing or reaping machine is the long bar which projects laterally

Figure 1.

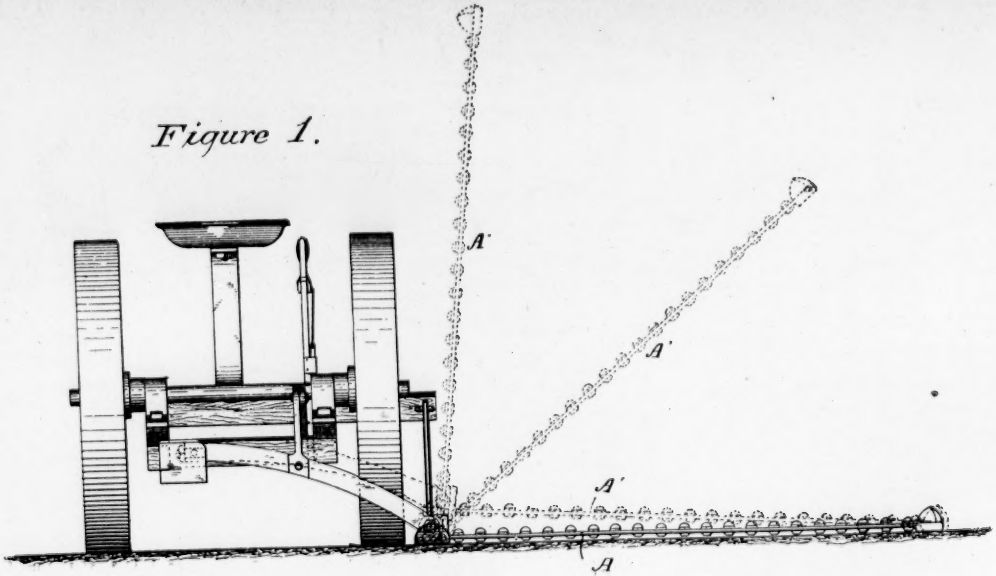

upon or near the surface of the ground, in which the serrated cutting knife reciprocates. It takes its name from the guard fingers, which project forward from its front edge.

In both mowing and reaping machines, this finger beam was, long prior to Graham's first efforts at invention, connected at its inner end to the gearing carriage of the machine by a vibratable link to which it was pivoted so as to tip up or down lengthwise, and also tilt crosswise.

This *endwise* tipping enables it to adapt itself to inclinations of the ground in the line of its extension, and also to be arbitrarily turned up either to avoid any exceptional obstacle in its path or for the purpose of transfer, while the *crosswise* tipping or tilting capacity enables it to conform to variations in surface in its line of progress.

The capacity for automatically adapting itself to the surface over which it passes, due to its free endwise tilting movement, is the quality designated by the term "*floating*" finger beam. The crosswise tilt is what complainant's expert has assumed to be referred to in the patent by the expression "rock forward and backward;" rocking "forward," referring to the depression of the front edge, or guards, and rocking "backward" to their upward tilt.

The front of the finger beam is its working edge, containing the knives and guards, and its position and path of movement (rather than that of its rear edge) is what has to be provided for in this rocking of the finger bar.

Fig. 1, in the accompanying plate, illustrates what is referred to as the endwise tilt, or, to use the language of the patent, the capacity to "rise and fall at either end," A being the finger-beam, the dotted lines A′ indicating the direction in which it moves for this endwise tilt.

It is not pretended that the patent introduced any modification in the mode of "rising and falling at either end." This tilt was common to mowers and reapers for many years before the earliest date suggested for Graham's invention, and took place, as in his machine, on a pivot at the inner end of the finger-beam. A former patent to Graham (that of July, 23, 1867, more specifically referred to

Figure 1.

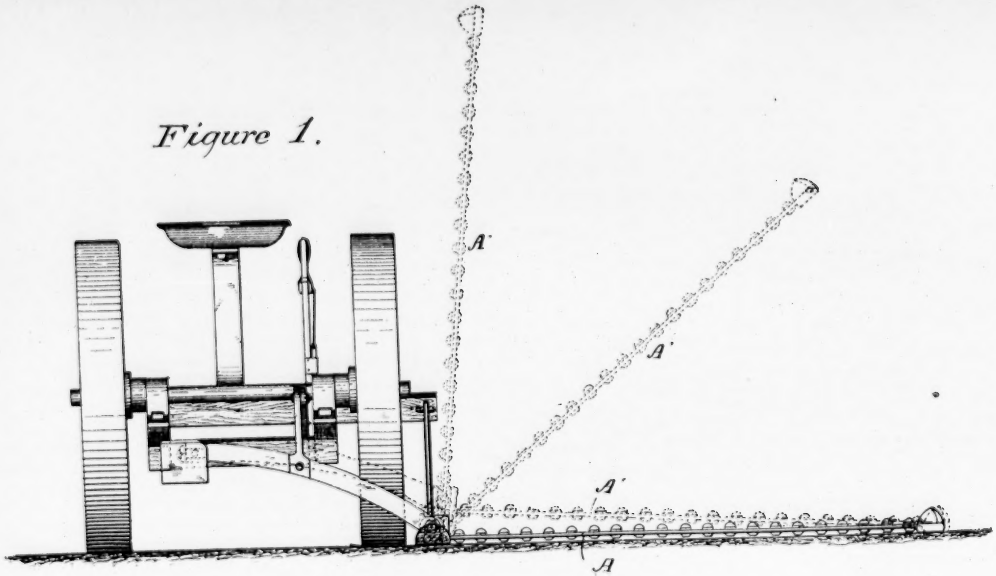

upon or near the surface of the ground, in which the serrated cutting knife reciprocates. It takes its name from the guard fingers, which project forward from its front edge.

In both mowing and reaping machines, this finger beam was, long prior to Graham's first efforts at invention, connected at its inner end to the gearing carriage of the machine by a vibratable link to which it was pivoted so as to tip up or down lengthwise, and also tilt crosswise.

This *endwise* tipping enables it to adapt itself to inclinations of the ground in the line of its extension, and also to be arbitrarily turned up either to avoid any exceptional obstacle in its path or for the purpose of transfer, while the *crosswise* tipping or tilting capacity enables it to conform to variations in surface in its line of progress.

The capacity for automatically adapting itself to the surface over which it passes, due to its free endwise tilting movement, is the quality designated by the term "*floating*" finger beam. The crosswise tilt is what complainant's expert has assumed to be referred to in the patent by the expression "rock forward and backward;" rocking "forward," referring to the depression of the front edge, or guards, and rocking "backward" to their upward tilt.

The front of the finger beam is its working edge, containing the knives and guards, and its position and path of movement (rather than that of its rear edge) is what has to be provided for in this rocking of the finger bar.

Fig. 1, in the accompanying plate, illustrates what is referred to as the endwise tilt, or, to use the language of the patent, the capacity to "rise and fall at either end," A being the finger-beam, the dotted lines A′ indicating the direction in which it moves for this endwise tilt.

It is not pretended that the patent introduced any modification in the mode of "rising and falling at either end." This tilt was common to mowers and reapers for many years before the earliest date suggested for Graham's invention, and took place, as in his machine, on a pivot at the inner end of the finger-beam. A former patent to Graham (that of July, 23, 1867, more specifically referred to

hereafter) expressly disclaimed the pivotal joint between the finger beam and the vibratable link, on which this tilting takes place, and stated that it was old.

Figs. 2 and 3 illustrate conditions of surface in which this endwise tilt, or rising and falling at either end, is utilized.

Fig. 4 illustrates the crosswise tilt, referred to in the patent as "rocking forward and backward," G being the finger beam, G′ representing the position it assumes when rocked or tilted upward or backward, G″ the position which it assumes when rocked downward or forward.

K is the shoe at the inner end of the finger beam, H the guard fingers, and M′ the point on which the crosswise tilt or rocking movement takes place.

It is to this crosswise rocking motion that the peculiarity of Graham's construction relates. He was not the first to introduce the crosswise tilt. Whatever invention he made related to the *particular pivot* on which this took place, and the means of *controlling* the movement.

Fig. 5, shows a hummock in the path over which the working part of the finger-beam is traveling, not broad enough to reach the wheel of the machine and so raise the machine bodily. If the finger-beam remains horizontal the guards may be driven into this hummock. The object of the crosswise tilt, as it has existed in prior machines, is to enable this finger beam, when the guards strike such a hummock, to tip upward and adapt itself to the rising surface, which it does automatically by reason of the upward pressure of the inclined surface upon the beveled front of the guards tipping them upward on a pivot at the rear of the finger beam.

In this illustration, B represents the hummock, C the finger beam, and *e* the point of the guards.

The old machines also had a lever I, connected by a chain or other loose connection, by which the driver could tip up the front edge of the finger bar arbitrarily and secure it so that it could not fall below the inclination to which he had set it, though it was left free to tip up further automatically.

Graham's "*greater capacity of movement*" is obtained

Figure 2.

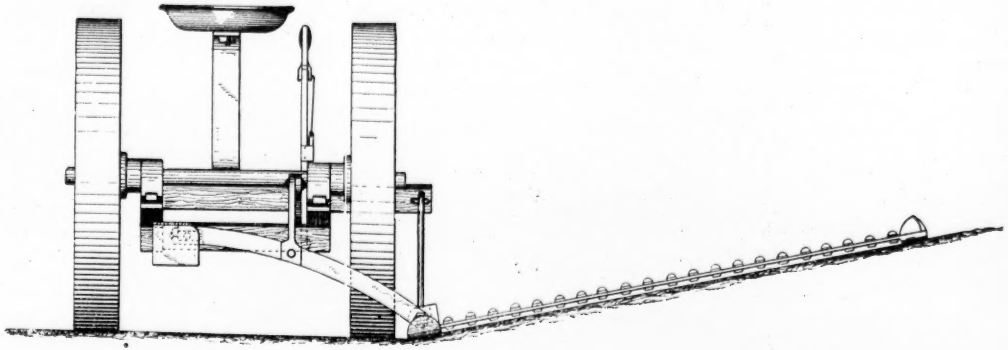

hereafter) expressly disclaimed the pivotal joint between the finger beam and the vibratable link, on which this tilting takes place, and stated that it was old.

Figs. 2 and 3 illustrate conditions of surface in which this endwise tilt, or rising and falling at either end, is utilized.

Fig. 4 illustrates the crosswise tilt, referred to in the patent as "rocking forward and backward," G being the finger beam, G′ representing the position it assumes when rocked or tilted upward or backward, G″ the position which it assumes when rocked downward or forward.

K is the shoe at the inner end of the finger beam, H the guard fingers, and M′ the point on which the crosswise tilt or rocking movement takes place.

It is to this crosswise rocking motion that the peculiarity of Graham's construction relates. He was not the first to introduce the crosswise tilt. Whatever invention he made related to the *particular pivot* on which this took place, and the means of *controlling* the movement.

Fig. 5, shows a hummock in the path over which the working part of the finger-beam is traveling, not broad enough to reach the wheel of the machine and so raise the machine bodily. If the finger-beam remains horizontal the guards may be driven into this hummock. The object of the crosswise tilt, as it has existed in prior machines, is to enable this finger beam, when the guards strike such a hummock, to tip upward and adapt itself to the rising surface, which it does automatically by reason of the upward pressure of the inclined surface upon the beveled front of the guards tipping them upward on a pivot at the rear of the finger beam.

In this illustration, B represents the hummock, C the finger beam, and *e* the point of the guards.

The old machines also had a lever I, connected by a chain or other loose connection, by which the driver could tip up the front edge of the finger bar arbitrarily and secure it so that it could not fall below the inclination to which he had set it, though it was left free to tip up further automatically.

Graham's "*greater capacity of movement*" is obtained

Figure 2.

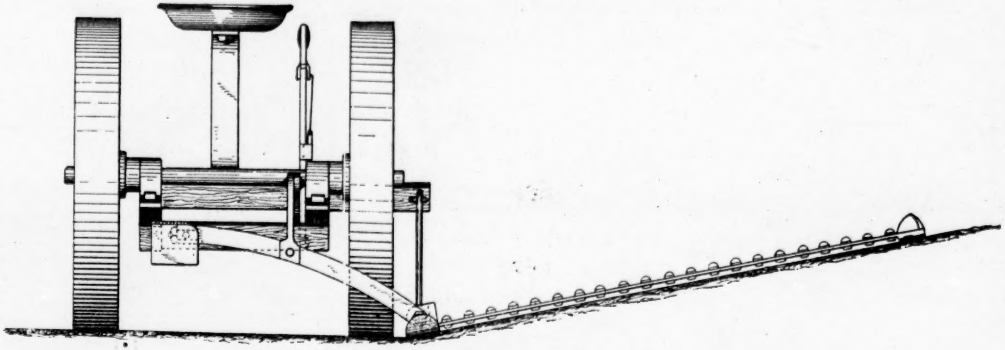

Figure. 3.

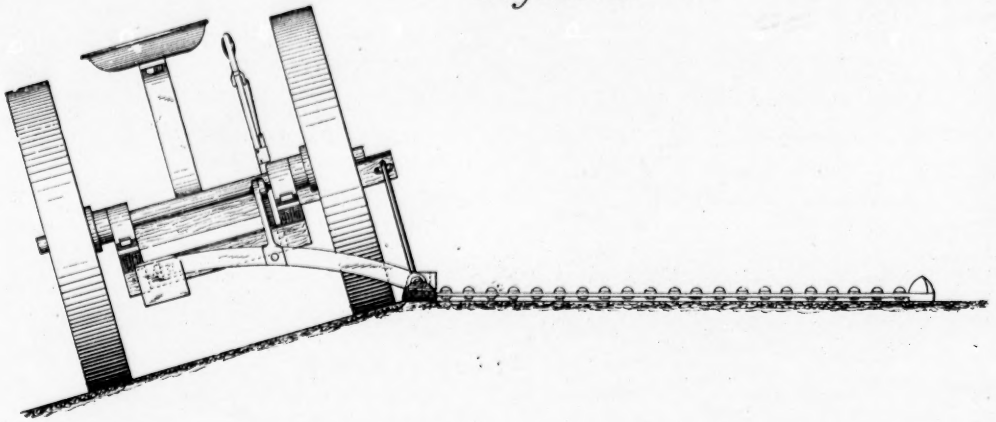

Figure. 4.

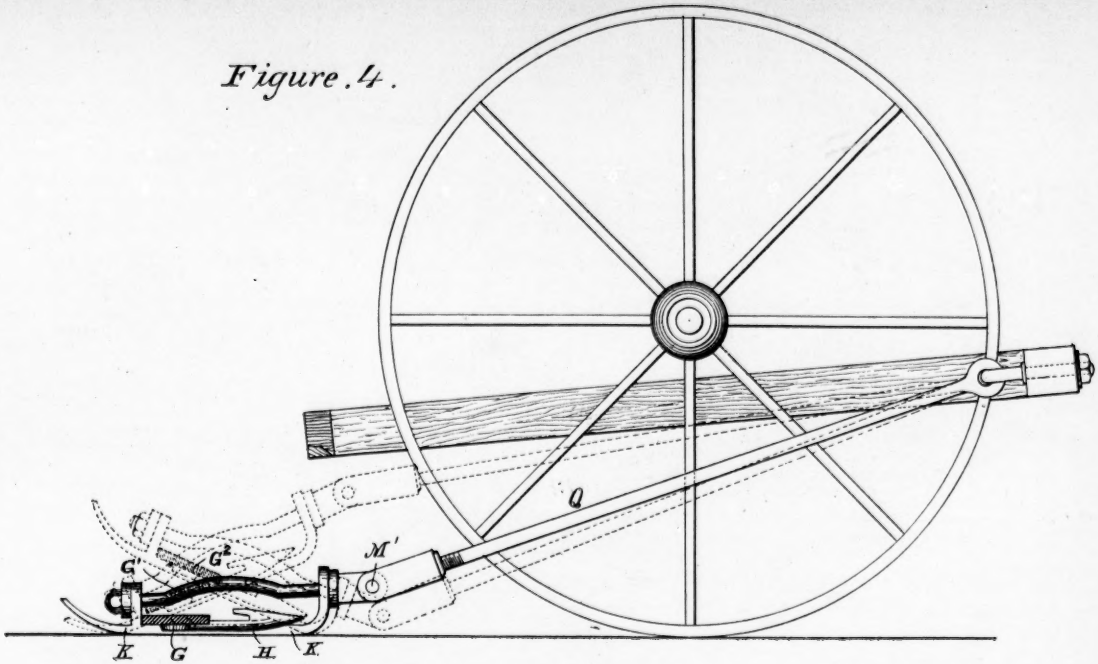

Figure 5.

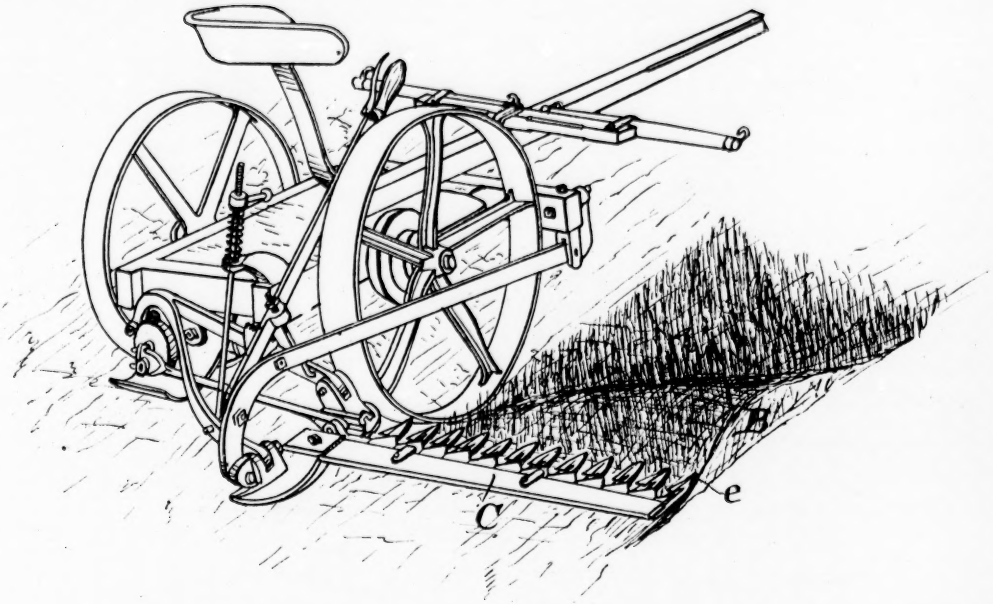

(if comparison be made with the types of machine more commonly in use prior to the alleged invention), by transferring the pivot on which this crosswise tilt takes place from the heel to a point in front of the beam, so that this pivot was made to rise and fall with the guard fingers, and providing an arm by which the movement in both directions was controlled by the operator, instead of being in one direction independent of his control, as in the machine before the date at which Graham claims to have made his invention.

Some illustration of the combinations of vibratable links, draft rods, and swivel joints, by which these endwise and crosswise movements were provided for before Graham entered the field, will best indicate the nature and effect of the modification introduced by him.

Some outline of his proceedings in the Patent Office will show that it recognized the modification made by him to be limited to the location of the joint on which his crosswise tilt or rocking movement takes place, and to the rigid arm by which the positive rocking of the finger guards in both directions is effected and controlled, and that the applicant and his solicitor concurred in such limitations.

In mowing machines (grain harvesters) it is desirable that the front edge of the finger bar should bear closely on the surface of the ground with a yielding pressure, which permits it to rise freely and pass over such irregularities of the surface as would not change the plane in which the machine, as a whole, is traveling, and are not sufficiently pronounced to require the driver to lift the beam bodily. Close proximity to the surface is wanted because the grass must be cut or shaved off as near to the ground as possible, to gather the entire crop. A yielding pressure, or, in other words, a capacity to swing upward on its heel, is necessary if the bar is to travel close to the surface, since, if its front edge was held rigidly down upon the ground, the guard fingers would be driven into every knoll or irregular acclivity encountered in its progress.

In reaping machines (grain harvesters) the finger guards

do not rest upon the ground or travel in close proximity to it, but the whole bar is set some inches above the ground, riding at the outer end on a wheel, while on the inner end it is hung on the carriage at a fixed elevation. The grain is comparatively brittle and readily cut at any height, and, as the object of cutting is primarily the grain rather than the straw, it is often preferred to cut high in order to lessen the amount of straw that must be transported and threshed. The plowed ground in which it grows is so soft and irregular, and often so covered with stones, that the knives, the guards, and the bar itself, would be in constant peril if the bar traveled in contact with the ground.

As the bar, when used in reaping, is set at such an elevation as not to come in contact with the ordinary irregularities of surface, there is no occasion for its front edge to be left free to tip or swing upward, and it is customary in reaping, to have it rigidly set in a fixed plane.

In both mowing and reaping it may sometimes be desirable for the driver to tip it positively downward to force the fingers under lodged grass or grain, which they would otherwise tend to ride over, but this would be very rare as compared with the occasion for the automatic upward tilt.

The capacity which Graham added to the machines before in general use was, *first*, a capacity for *raising and lowering the pivot of oscillation* (which had before been stationary); and *second*, a capacity for *this positive downward tilt* (or *forward rocking*), which enabled the driver to *tip up the heel and force the fingers under lodged grain or grass*, which they would occasionally ride over if left free; but this was obtained at the expense of the capacity for automatic adaptation of the front edge of the bar to the surface of the ground, and of the free upward tilt, which had been common in the mowers previously on the market.

In prior machines (more particularly referred to presently) it was common to combine the finger beam and the gearing carriage by means of a vibratable link crosswise to the line of draft, and a draft rod extending parallel with the line of draft, with two swivel joints, one connecting

he vibratible link with the gearing carriage and the other n the draft rod, making the pivot connections between these elements and the finger beam at the *rear of the inner end of the finger beam, or of the shoe on which it rides*, so that the *weight of the beam would tend to press it flatwise on the surface over which it travels*, while it would be *free* to tip *upward* (or rock backward and forward on a pivot at the heel of the bar) when its guards (whose under surfaces are beveled upward toward the front) encounter any acclivity. Its adaptation to the surface would, therefore, be automatic, as the resultant of the floating finger beam opposing its weight against any upward thrust, while freely swinging or tipping upward on the rear pivot when a rising surface was encountered.

To enable the driver to arbitrarily *tip up* (or rock backward) the guards, when approaching any irregularity too abrupt for them to ride freely over it, a lever under his control was loosely connected with the link which raised the front of the finger beam, so that it would not interfere with the free automatic upward tilt of the guards or serve in any way to hold them down, but would serve to incline the front of the beam upward, and to fix the limit of its downward movement. The guards, therefore, could tip up automatically, without other resistance than the weight of the bar, or could be raised by a lever under control of the driver when desired, but could not be positively forced downward or *rocked forward*. The driver had the means of tilting it up and securing it so it could not fall below any desired upward inclination, through the lever under his control, but, while he could release it and allow it to fall or tip downward until it struck the ground, he could not, through the lever, hold or force it downward, or prevent its rising.

In some of the evidence in this case, a distinction is made between the term "*rocking*" and the term "*swinging*," as applied to this crosswise tilting of the finger bar; the former term being applied where (as in the Graham machine) the tilting backward rocks the front of the bar upward, while the tilting forward rocks the heel of the bar upward and the front of the bar downward; and the latter term

being applied to constructions of the kind shown in the Ball machine and in the defendants' machine, where *the pivot on which the tilting takes place is in the rear of the bar, and the heel of the bar rises whenever the front of the bar rises and falls whenever the front of the bar falls, but on a shorter radius*, and there is no means of *positively tipping the front of the bar downward, or of raising its heel to force the front edge or guards downward.*

This distinction in terms has not always been observed in the nomenclature used in patents, and the terms "*rock on its hinges*," or "*rocking on a pivot at its heel*," has sometimes been applied to this swinging movement; but there is a vital distinction between the two classes of movements in their effect upon the operation of the machine.

This seems to have escaped the notice of the court below in reading the testimony, and it apparently understood that, where the expert said that there was no *rocking* movement in the older machines, he meant that the finger beams of these machines had not the capacity for tipping upward on their heels in the manner employed in the Ball and in other old machines, as well as in the defendants'. There seems to be no other explanation of its falling into the error of assuming that Graham originated this crosswise tilt of the finger beam. (*See Dep. Powers, p.* 293–295, 296, 297, *a.* 8.)

It is important to have in mind the distinction between these movements, in examining the patents (irrespective of what language is used to describe the movements), and it is illustrated in the accompanying plates.

Figs. 6 and 7 show a finger beam, A, pivoted at the heel of the shoe, *m*, to the draft rod or drag bar, B. Fig. 6 shows the draft rod passing under the finger beam, and Fig. 7, the draft rod carried over the finger beam, to reach the pivotal point, which is in each case the same. The weight of the finger beam being in front of the pivot, tends to hold its front edge or guards down upon the ground, but when the guards strike any acclivity it swings up freely on its rear pivot toward the position indicated by dotted lines

Figure 8.

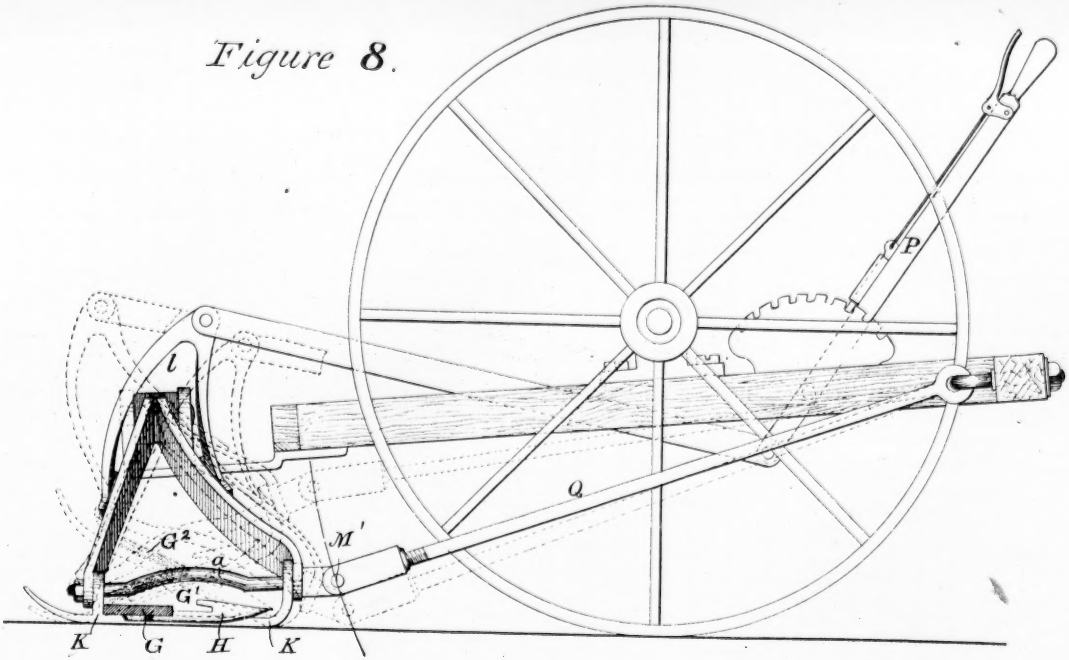

being applied to constructions of the kind shown in the Ball machine and in the defendants' machine, where *the pivot on which the tilting takes place is in the rear of the bar, and the heel of the bar rises whenever the front of the bar rises and falls whenever the front of the bar falls, but on a shorter radius*, and there is no means of *positively tipping the front of the bar downward, or of raising its heel to force the front edge or guards downward.*

This distinction in terms has not always been observed in the nomenclature used in patents, and the terms "*rock on its hinges*," or "*rocking on a pivot at its heel*," has sometimes been applied to this swinging movement; but there is a vital distinction between the two classes of movements in their effect upon the operation of the machine.

This seems to have escaped the notice of the court below in reading the testimony, and it apparently understood that, where the expert said that there was no *rocking* movement in the older machines, he meant that the finger beams of these machines had not the capacity for tipping upward on their heels in the manner employed in the Ball and in other old machines, as well as in the defendants'. There seems to be no other explanation of its falling into the error of assuming that Graham originated this crosswise tilt of the finger beam. (*See Dep. Powers, p.* 293–295, 296, 297, *a.* 8.)

It is important to have in mind the distinction between these movements, in examining the patents (irrespective of what language is used to describe the movements), and it is illustrated in the accompanying plates.

Figs. 6 and 7 show a finger beam, A, pivoted at the heel of the shoe, *m*, to the draft rod or drag bar, B. Fig. 6 shows the draft rod passing under the finger beam, and Fig. 7, the draft rod carried over the finger beam, to reach the pivotal point, which is in each case the same. The weight of the finger beam being in front of the pivot, tends to hold its front edge or guards down upon the ground, but when the guards strike any acclivity it swings up freely on its rear pivot toward the position indicated by dotted lines

Figure 8.

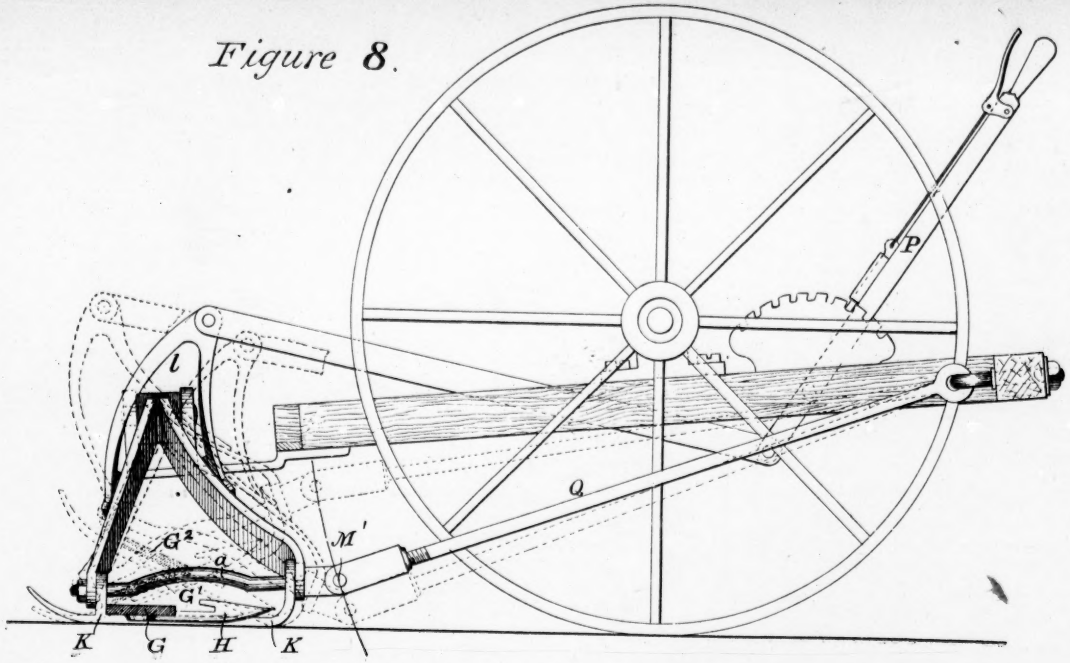

Figure. 7.

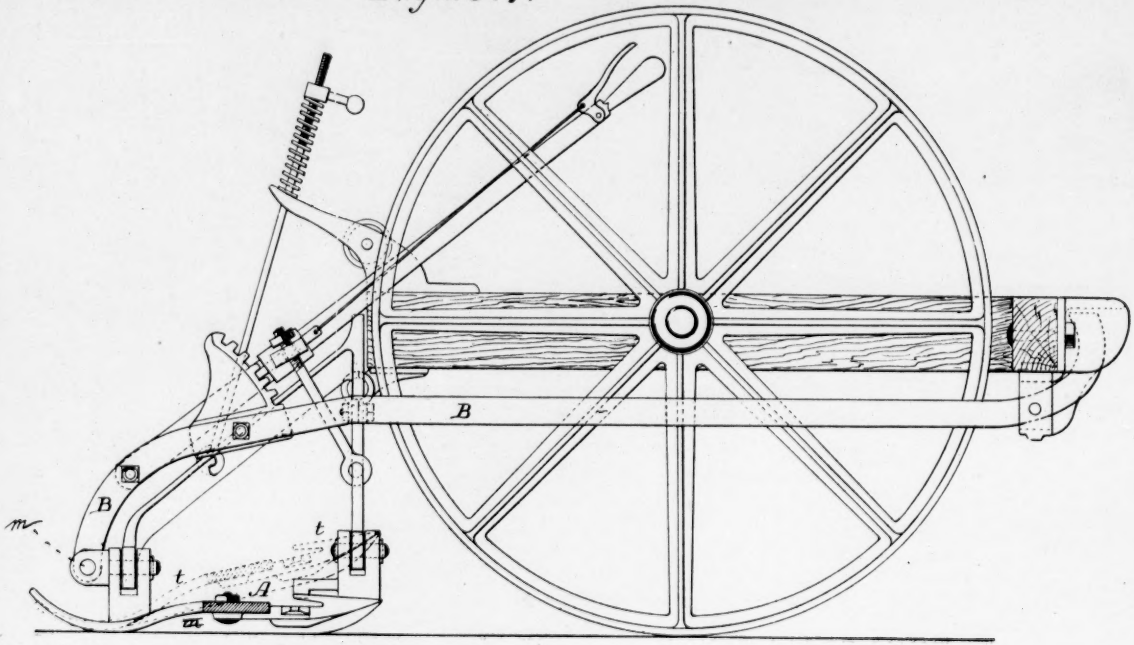

Figure 6

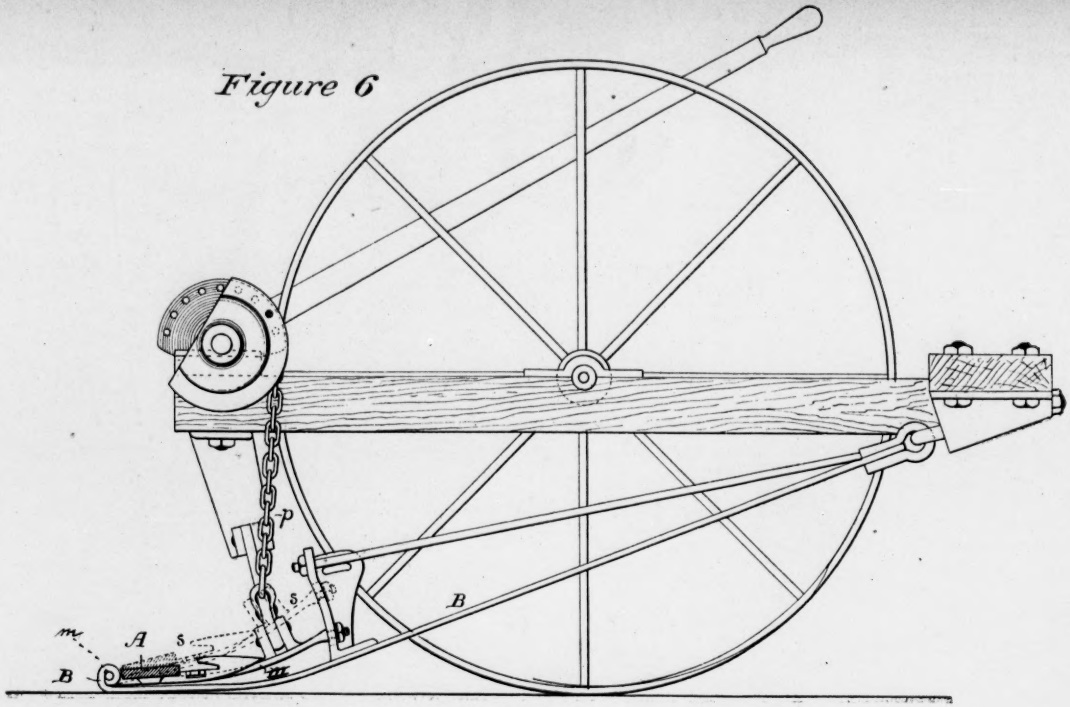

marked *s*, *s*, its weight tending to return it to its original position as soon as the acclivity is passed. The driver can, by his lever, I, connected with the chain, *p* (Fig. 6), raise it or hold it up, but not tilt it downward, its downward swing being dependent solely upon its weight being in front of the pivot on which it turns. Fig. 7 shows a substitute for the chain—a loose sliding link, which affords the same unrestrained upward movement as the chain while serving the same lifting purpose, and incapable of either holding or forcing the beam downward. The dotted lines, *t*, *t*, show the curve in which the front of the beam travels in this tilt, it being a curve concave backward on the short radius from a center at the heel of the bar. In each case (Figs. 6 and 7), the propulsion from the draft rod is from the rear pivot, and the front edge carrying the guards is left free for this swinging movement. The guards, therefore, tend to ride on the ground and play upward freely.

Fig. 6 is the construction shown in the Ball patent of October 18, 1859 (specifically referred to hereafter), and Fig. 7 is the defendants' construction.

Fig. 8 illustrates the movement that has been referred to as "*rocking*" (in distinction from the *swinging* movement of Figs. 6 and 7), and corresponds to the Graham patent. The pivotal connection between the finger bar and the draft rod, instead of being as before at the *heel* of the beam, is placed in front of the beam at M′, and a rigid arm, *l*, is mounted on the vibrating link, by which it can be rocked backward and forward by the driver to tip the heel of the shoe up and the front down, or the front up and the heel down, and to *set* and *lock* it at any inclination in which he may choose to fix it.

The movement is in this case that of the rocker of a rocking chair, the heel of the finger bar being lifted by the driver by the forward rocking of the arm, *l*, and the front being lifted by the backward rocking, so that the movement in each direction is positive and under control. The finger beam, G, is mounted on the shoe, K, and has its pivotal connection with the draft rod, O, at M′. Instead of swinging, as before, on a pivot which pushes it from behind,

and which is, therefore, *constant*, and *not raised or lowered by the upward or downward tilt of the fingers*, the bar now rocks on the pivot, M′, and the heel is lifted from the ground as the guards are turned down. The movement in each direction is indicated by dotted lines.

When the pivot is at the point, M′, the guards can no longer swing upward automatically, nor will they (unless locked down) tend to ride upon the ground. Their path is controlled by the *pull* of the draft rod in a fixed direction, which tends to hold them at a certain inclination above the ground, corresponding to the direction of the draft rod, and to prevent their moving either above or below a plane extending to the front of the pivotal point of the draft rod; that is to say, instead of swinging freely up and down as they do when simply pushed from the rear pivot, the pull of the draft rod from the front tends to hold the teeth in a line extending toward the front pivotal point of the draft rod. When any resistance is encountered which would press the bar back against the draft rod (the time when a free upward tilting becomes most necessary), the pull of the draft rod would be increased, and would lock the bar all the more rigidly against any tilting movement. The pivotal point between the shoe and the draft rod, instead of remaining at a uniform height above the ground (as it does where the pivot is behind, at the center about which the swing takes place), must change its elevation with every upward and downward movement of the fingers. This necessitates the draft rod swinging upward and downward. Its path is on the arc of a circle whose center is at the front of the draft rod. When it rises or falls from the line of tension (as it must do in every tilting movement), the draft rod and joint pin, *a′*, necessarily tip at an angle to each other, thus forcing the fingers forward of the path they would take if allowed to swing backward on an arc having its center at their heel, as in the case before illustrated. The position of the draft rod in this tilting movement is illustrated by dotted lines.

This necessity for tipping the draft rod out of the line

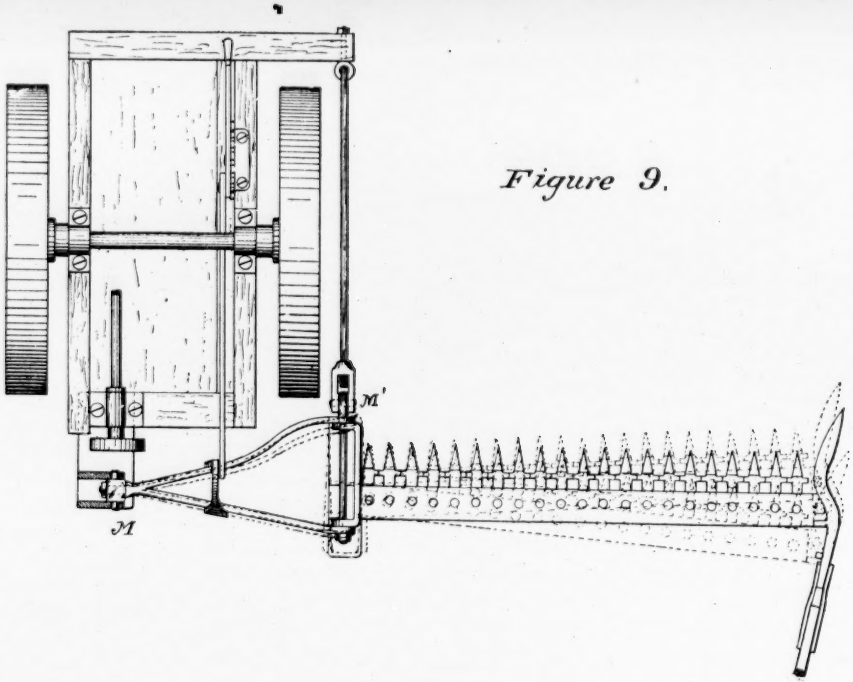

Figure 9.

of the pull would not only increase the difficulty of making the tilting adjustment (since the draft rod has to be forced out of the line in which the draft tends to hold it), but it would make it impossible to have an automatic adjustment to the surface of the ground, and necessitate the intervention of the driver to tilt the bar up or down. It would also give an angular movement to the finger beam; that is to say, the outer end of the finger beam would be thrown forward and its rear end backward, and *vice versa*, as the tilt was made, instead of having the bar preserve its alignment during the tilt, as it would do in the cases before illustrated.

This is shown by Fig. 9, which is a top view indicating by dotted lines the angular movement of the finger beam when this tilting takes place, where the pivot of the tilt is at M′, and the pivotal point rises and falls with the guards, alternately pulling the heel of the beam forward and backward in consequence of the draft rod, and the joint pin, *a*, being thrown at an angle to each other. This movement taking place on a center at M (the pivotal point of the vibratable link), the outer end of the finger bar is thrown as much further forward and backward than the inner end, as the difference in an arc described on a radius from M to the inner end of the beam, and an arc described on a radius taken from M to the outer end of the beam. This not only obliges one end of the bar to be thrown forward in the grass faster than the machine is traveling, but, by setting the bar at an angle, would bring the reciprocating knife at an angle with the pitman that gives its reciprocating movement, and, by the cramping that must result, cause liability of breakage.

The placing of the pivot at the point, M′ (a point that necessarily swings in the arc of the circle described during the tilt), makes it absolutely necessary to secure the guards rigidly at any inclination in which it is desired they shall travel, as they will not automatically tend to follow the inclinations of the ground as they do when the bar swings from the rear pivot. It also makes it necessary to have the adjustments in each direction made through a rigid arm

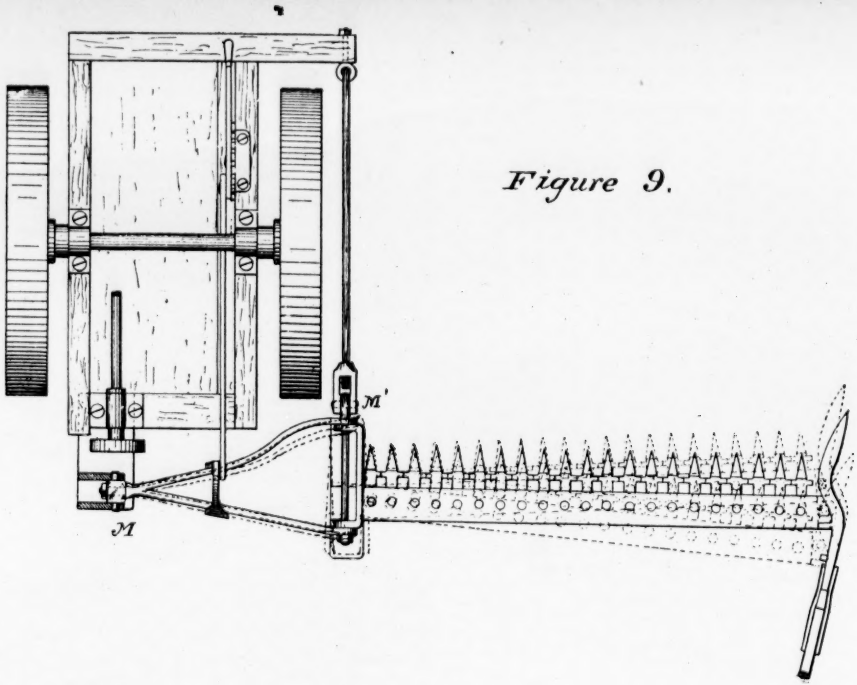

Figure 9.

of the pull would not only increase the difficulty of making the tilting adjustment (since the draft rod has to be forced out of the line in which the draft tends to hold it), but it would make it impossible to have an automatic adjustment to the surface of the ground, and necessitate the intervention of the driver to tilt the bar up or down. It would also give an angular movement to the finger beam; that is to say, the outer end of the finger beam would be thrown forward and its rear end backward, and *vice versa*, as the tilt was made, instead of having the bar preserve its alignment during the tilt, as it would do in the cases before illustrated.

This is shown by Fig. 9, which is a top view indicating by dotted lines the angular movement of the finger beam when this tilting takes place, where the pivot of the tilt is at M′, and the pivotal point rises and falls with the guards, alternately pulling the heel of the beam forward and backward in consequence of the draft rod, and the joint pin, *a*, being thrown at an angle to each other. This movement taking place on a center at M (the pivotal point of the vibratable link), the outer end of the finger bar is thrown as much further forward and backward than the inner end, as the difference in an arc described on a radius from M to the inner end of the beam, and an arc described on a radius taken from M to the outer end of the beam. This not only obliges one end of the bar to be thrown forward in the grass faster than the machine is traveling, but, by setting the bar at an angle, would bring the reciprocating knife at an angle with the pitman that gives its reciprocating movement, and, by the cramping that must result, cause liability of breakage.

The placing of the pivot at the point, M′ (a point that necessarily swings in the arc of the circle described during the tilt), makes it absolutely necessary to secure the guards rigidly at any inclination in which it is desired they shall travel, as they will not automatically tend to follow the inclinations of the ground as they do when the bar swings from the rear pivot. It also makes it necessary to have the adjustments in each direction made through a rigid arm

which positively controls the movement, since the pull of the draft rod always tends to hold the fingers in a path corresponding to its own direction. This construction can only be practically used with the finger beam locked at an arbitrary angle. It would be utterly impracticable with the loose connection that affords the automatic play in the swinging type. It exchanges the free movement, and self adaptation to the surface over which it rides, for the capacity of positive adjustment in both directions and of being rigidly *set* and *locked* at any desired angle.

If a finger beam mounted in this way were set in a plane parallel to that of the draft rod, its front edge, instead of pressing upon the ground, would always point upward, and, when the guards struck an acclivity, the pull of the draft rod would prevent their turning up further than the path in which they were already traveling. If the wheel passed over a knoll which did not extend laterally across the path of the finger bar, or which had not been reached by the finger bar, the guards would be tilted up correspondingly, instead of adapting themselves (as would be the case with the swinging bar) to the surface over which the bar was traveling.

If the finger beam were attached to the shoe with such inclination below the plane of the draft rod as would be necessary to have its front edge ride on the ground when the machine was traveling over a level surface, the teeth would be thrust into any acclivity that it encountered, and the resulting backward pull would tend to hold it all the more rigidly against any upward movement that could release it, while if the wheel of the machine went into a depression to which the surface over which the bar was traveling did not correspond, the guard fingers would be driven into the ground and breakage would result.

The Ball patent of October 18, 1859 (*p.* 364), exhibits the type of connection and adjustment which was common prior to the time Graham entered the field, and has continued so since that date. There are earlier patents in evidence showing the same tilting movement, obtained by

Figure 10

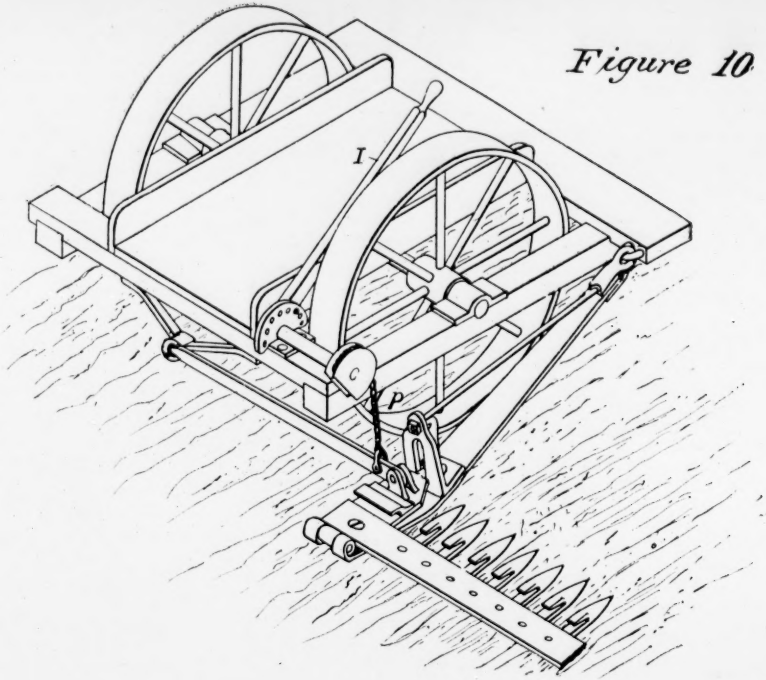

approximately the same elements, and Ball only claims a specific improvement in the method of making it.

This patent illustrates at once the plan from which Graham was departing and the plan to which the defendants have adhered.

Fig. 10 shows in perspective the part of the Ball machine relative to this controversy, constructed in strict accordance with the drawings of the patent, but omitting, for the sake of clearness, features of the machine that are irrelevant. The drawings of the patent follow.

It has the floating finger beam combined with the gearing carriage by means of a vibratable link crosswise to the line of draft, a draft rod extending parallel with the line of draft, and two swivel joints, one connecting the vibratable link with the gearing carriage, and the other in the draft rod (at its front end), enabling the finger beam to rise and fall at either end, and to swing or tilt automatically, or be tipped or tilted positively backward or upward, so that the points of the guards may either rise automatically or be lifted by the driver through the intervention of the lever. The finger beam may swing or tilt forward by its own weight till the fingers reach the ground level, or to any point above that level which may be arbitrarily fixed and adjusted by the driver through the lever. But while the driver can tilt it backward or upward, he can only release it so as to allow it to tip downward or forward, and can not positively depress it below the level to which its own weight will carry it, or hold it down against any pressure that would be sufficient to overcome its weight.

This Ball machine, like the Graham, is described as a "combined reaper and mower." When used as a reaper, a fixed or rigid adjustment at an angle or inclination arbitrarily determined by the operator is (for reasons before explained) sometimes desired, and the machine is provided both with means for this arbitrary rigid adjustment for reaping, and with means for the automatic adjustment coupled with the capacity to be arbitrarily tilted upward by the driver, which is required when it is used as a mower.

This first adjustment corresponds more nearly with the Graham, and distinguishes it from the defendants' machine. The second corresponds with the defendants' machine, and distinguishes it from the Graham. It can be used alternately with the advantages of the one or the advantages of the other, while the Graham can not have the properties of the defendants', and the defendants' can not have the properties of the Graham.

The second of these adjustments corresponds precisely with the defendants', on which the charge of infringement rests, and is effected by the same elements operating in the same way.

The specification first describes how the finger beam (which is a floating beam pivoted at its heel) can be arbitrarily set at any desired angle (as it would be when used for reaping). It says (*p.* 366, *Rec.*):

"The finger-bar D is fastened to a swinging plate, G, hinged to the lower end of the brace bar or plate E at *r*. There is also attached to the plate E a guide-piece F, to keep the plate G steady as it turns on its hing *r*, the upper end of the plate G working between shoulders on the piece F. *When it is desired to fix the plate G in a rigid relative position* as respects the brace-plate E, the screw *s*, which works through the piece F into the plate G, is turned up, so as to hold the plate firm. To obviate the necessity, however, of taking out the screw nut *s* every time the change is made, the piece F is provided with a slot, so that the screw-nut *s* need only be loosened sufficiently to play freely up and down in the piece F *when it is desired to permit the plate G to turn on its hinge.* The brace-plate E is attached to the front of the frame by a hinge-joint, as fully shown in Figs. 1 and 2."

It then describes the adjustment when the machine is used as a mower, as follows (p. 367):

"*When mowing*, the finger beam being attached to the hinged plate G, *the front of the fingers can rise and fall to a limited extent, while the rear end of the brace plate E rests on the ground, so that the fronts of the cutters are not so liable to run into slight and sudden elevations of the ground as they would without this provision. The driver, too, by means of the*

lever I, can, with but little effort, turn up the front of the fingers at pleasure without raising either end of the finger-beam off of the ground, as shown in red, Fig. 6. When, however, it is desired to raise the finger-beam and sickle entirely off of the ground (*and the front of the plate G is allowed to play up and down in the slot in the piece F*), the driver has to *turn the lever I, so as to draw the front of the plate G up against a stop on the top of the guide-piece a, or until the screw s strikes against the top of its slot*, when the finger-beam can be raised entirely off of the ground, and in nearly a horizontal position, the top of the inner side of the hinged plate G coming in contact with the coupling-arm *t*, as shown in Fig. 16 at G′."

The vibratable link (which corresponds exactly in its mode of folding and swinging with the Graham) is called a "coupling arm *t*," and is thus described (p. 366):

"To keep the finger-bar and cutting apparatus from being wrenched laterally, a coupling-arm *t* is hinged to the plate G at *u*, and to the hanger *u′* by a swivel joint, *u″*."

The hanger *u′*, to which this link is connected by a *swivel joint*, is a hanger located on the rear of the frame in the same position as the hanger to which the vibratable link of the Graham patent is pivoted. It is shown in the patent in Fig. 16, Fig. 10, Fig. 2, and Fig. 1. The end of it which connects with the shoe is also shown in Fig. 5. The position to which the finger bar rises automatically when it is used as a mower, or to which it is positively raised by the driver through the chain connecting with the lever, is best shown in Figs. 5, 6, and 2. Where colored lines are referred to in the specification, dotted lines are shown in the photo-lithographs, and the dotted lines in Fig. 6 indicate the play of the finger bar as it rises automatically or is moved upward by a chain, while Fig. 5 shows how it may be rigidly set by the set screw *s*, when it is used as a reaper. The lever by which this upward tilt can be positively effected is described as capable of being locked in different positions, so as to prevent its falling below any fixed angle (p. 366):

"A catch-plate c' is fastened to the upper rear part of the frame, as shown in the drawings, in such relative positions as respects the fulcrum of the lever I that a pin or other suitable device attached to the lower part of said lever will catch into the holes in the plate c' and hold the lever in any desired position, the lever being so constructed that it can be moved laterally, so as to release the pin or catch from the plate c', when it is desired to change the position of the lever."

This is the same lever referred to in the paragraph describing the use as a mower as that by which the driver can

"turn up the front of the fingers, at pleasure, without raising either end of the finger-beam off of the ground, as shown in red, Fig. 6."

The draft rod of this patent (designated "brace bar" E) is in the same position as that in the Graham patent. It has a swivel-joint at the front end, and a hinged joint at the rear, which gives the same capacity of movement for both the rising and falling of the finger beam at either end, and for this rocking or tilting (or swinging on its rear pivot) that is found in the defendants' machine.

The extent of the tilting movement which the finger bar of the Ball patent has, corresponds exactly with the extent of movement in the defendants' machine, it being limited in the one case in the upward direction by the length of the "guide piece F" and in the other by the distance from the top of the lug in front of the shoe to the under edge of the drag bar or draft rod. In the first it can be indefinately extended by extending the "guide piece F," in the second it can be extended by increasing the height of the drag bar.

By reference to Fig. 11 (which exhibits defendants' construction) the correspondence between the machines will appear. I, is the tilting lever, which in both the Ball and in the defendants' tilts up the front of the beam when the driver wishes to raise it arbitrarily. In the Ball the lever is connected through the chain, p, and in defendants'

through a loosely pivoted sliding link, p', which has the same effect as the chain, neither being capable of depressing or holding down the bar or applying the *rocking* motion.

The Graham machine would be inoperative with either of these connections.

The capacity of downward movement or forward tip is in each case limited by the contact of the front of the shoe, or the front of the guard fingers, with the ground or such other obstacle as is sufficient to sustain the weight of the bar.

The lever under control of the driver enables him in each case to vary the limit of the downward movement and to tip the guards upward, but in neither case can he force the guards downward, and in neither case can the heel of the bar be rocked upward (either arbitrarily or automatically) while the front edge or guards are rocked downward.

The capacity for the forward or downward tilting and the positive control of the tilting in both directions, which is given in the complainant's patent by placing the pivotal connection between the draft-rod and the finger beam at M′ of the patent, thus making *the pivot and draft rod move up and down with the guards*, and by the arm which connects the vibratable link with the tilting lever and has itself a *rocking* instead of merely *lifting* movement, are wanting in both.

If the first claim of the Graham patent is taken as covering the combination in a harvester of the finger beam with the gearing carriage by means of the vibratable link, the draft rod and the two swivel joints (one of them located where M is and the other located in the draft-rod), so that the finger beam may both rise and fall at either end and rock forward and backward to the extent and in the manner the defendants' does, it is completely anticipated by the Ball.

If the second claim covers the combination in a harvester of the finger beam, gearing carriage, vibratable link, draft rod, swivel joints, and a lifting rod or link by which the finger bar can be tilted upward, but not *controlled* in

its movements, or forced downward, it is completely anticipated by the Ball patent.

If these claims are limited to the the swivel joint at M', or to the arm by which the beam is positively rocked in both directions, and its movement in each controlled by the operator, there is no infringement.

Defendants have pivoted their drag bar to the same point in the shoe as in the Ball machine, but have reached that point by carrying it over rather than under the shoe. But this does not change its effect upon the pivotal movement of the finger beam. The draft rod still *pushes* the finger beam from a rear pivot, as in the Ball, instead of *drawing* it from a front pivot, as in the Graham. The weight of the bar still tends to hold its front edge yieldingly upon the ground, and the draft rod can have no lifting action. The lever still has no capacity for *rocking* the beam or *controlling* the inclination at which it is *set*. It can only *lift* the guards.

This carrying of the draft rod over rather than under the shoe, which distinguishes defendant's machine from the Graham more materially than from the Ball, was older than the Ball patent in combination with the other elements employed in this connection. It is illustrated, for instance, in the Zug patent of October 4, 1859, more specifically referred to hereafter. It also appears in the McCormick & Espelding, intermediate between the Ball and the Graham patents, where there is the same double joint at the heel as in defendants' present machine, affording the same movement for the same purpose.

The bending of the draft rod up over the shoe instead of under it (seemingly a very obvious mechanical change from the Ball construction) not only did not originate with Graham, but is not exhibited in his patent. Instead of reaching the pivotal point at the heel by bending the draft rod over the shoe and carrying it downward to this point, he cuts his draft rod off in front of the shoe and transfers the pivotal point to meet it there, thereby eliminating the capacity for automatic adaptation that was due to the pivotal point being behind the bar, and making a depar-

ture in a direction that no practical manufacturer has found it expedient to follow.

The Zug patent of October 4, 1859 (*p.* 362), is another illustration of the combination of the same elements used by the defendants for the same purpose, lacking the capacity for positive downward tilt and the capacity for being positively controlled in its movements, which distinguish the Graham. In these respects it corresponded with the defendants'.

It has the combination in a harvester of the finger beam with the gearing carriage by means of a vibratable link, a draft rod and two swiveling joints, one in the vibratable link and the other in the draft rod, so that the finger beam could both rise and fall at either end and tilt crosswise (or rock forward and backward on a rear pivot) to the same extent as the defendants'; but the capacity for rocking forward and backward was, as in the defendants', limited to the swinging movement which permitted it to tip up automatically or to be tipped up by the driver, and gave it no capacity for being *forced* downward. The vibratable link has the precise fork shape that is shown in the Graham patent. This forked or bifurcated link is only a skeleton form. The forked form of this link is not made an element in either of the claims in controversy, either in terms or by implication, and has not been so treated.

The vibrating link, called in the patent the "supporting bar Y," is described as "hinged at 16" to a "circular band 9, with a projecting end," and also:

"Hinged at 16, and also at 12, to the shoe Z, between raised bearers, 13, for the reception of bar 1, which supports the fingers or guards 3 3, and also the platform. When used for reaping; this supporting beam Y is braced with the piece W, hinged at 14 on the shoe Z. There is also an adjustable caster wheel, 8 (not shown on the model), under the supporting bar Y, which rests on the ground at any desired elevation of the cutting bar adjustment, as in common use. The elastic spring brace V embraces the supporting bar Y at *v*, in which the bar can vibrate to adapt it to the folding over of the sickle bar 2 and finger supports 1 onto the truck when desired. The other end of

the spring brace V is hinged to a bolt passing through a box, P, with a nut and screw; this bolt is surrounded with thick gum elastic within the box, being of sufficient power to retain the bolt, yielding only when the guards come in contact with any obstacle while operating, by which much damage to the machine may be prevented, the supporting bar, Y, being also hinged at 16, so as to allow a sufficient vibration under such circumstances. A hoisting bar, 4, is hinged to 14 on the shoe and secured to the spring brace V, over which the chain, U, is passed at one end, while the other end is secured to the projecting point on the quadrant-like grooved lever arm Q. The lever, T, in its socket R operates in the curved or toothed quadrant S, as shown, by which lever arrangement the shoe Z, with its appendants, can be raised and lowered with ease and retained in the desired notch."

The circular band, I, at 9, to which the vibrating link, Y, is "hinged at 16, so as to allow a sufficient vibration under such circumstances," corresponds exactly with the point on the gearing frame to which the Graham vibrating link is pivoted.

The swiveling play afforded at this point is, as indicated in the specification and by the drawing, sufficient to allow of all the vibration that is required for the tilting movement. The angular shape of the connection with the draft rod, V, indicates the extent of this play. The draft rod has a swiveling play, that is, a rocking in both directions between the draft rod and the shoe. The hoisting bar, 4, is pivoted to the shoe, so that it can be rocked up to give the tilting movement to the fingers without raising the heel of the bar off the ground. This rod is connected by a chain with a lever under control of the driver, so that the guards are free to tilt up automatically, or can be lifted by the driver and fixed at the desired elevation and locked there against a downward tip, but can not be forced or held down. The sole purpose of this "hoisting bar" is to allow for the upward tilt of the front of the finger beam without raising the heel of the finger beam, otherwise the chain would be attached directly to the vibrating link.

This Zug machine has all the movements of the de-

fendants' machine with the same freedom of play in one direction, the same amount of control over the upward movement, and the same absence of control over the downward movement. This is illustrated by the certified model of the Zug machine in evidence. Its possession of this tilting movement is admitted by complainant's expert. He says in cross-examination (p. 84, a. 48):

"There is shown and described in specification to Zug patent a slight lifting movement to the guard points to take place in advance of lifting the finger bar above ground and for holding it upon the frame, but no intention appears from the description for utilizing such tilting movement for raising and lowering the guard fingers above or to the horizontal line while the machine is in operation."

The language of the Zug patent,

"yielding only when the guards come in contact with any obstacle while operating, by which much damage to the machine may be prevented, the supporting bar, Y, being also so hinged at 16 as to allow a sufficient vibration under such circumstances,"

seems to indicate very plainly that this upward tilting of the guard fingers was to be used for raising and lowering the guard fingers while in operation. There certainly could be no object in providing for the upward tilt, as is done in this machine, for any other purpose than to utilize this movement while the machine is in operation. But the pivoted hoisting bar making the connection between the chain and shoe, so as to enable the driver to tilt up the guard fingers without lifting the bar off the ground, is an unmistakable indication that this was intended to be utilized in the operation of the machine.

Whether the space allowed for this tilt, as shown in the Zug drawings, is greater or less than that of the Graham, it can be indefinitely increased without any change except mere enlargement of the space allowed for it. But the movement of this character utilized in any machine is very slight, a tilting of the guards one inch represents

many degrees of change in the angle of presentation, and it is only to change this angle that this tilt is employed. In the defendants', and all machines of this character, the bar must be raised off the ground when any abrupt obstacle is encountered. It is only slight changes in the inclination of the surface over which the bar is traveling that this tilt on its pivot is intended to provide for.

Defendants' witness, Powers, says (p. 296, a. 8):

"This Zug machine shows a finger bar attached to the rear end of the machine by a vibratable link and the draft rod, substantially like those shown in machines already referred to, with the additional difference that the vibratable link is attached at its rear end loosely to the machine, and the said vibratable link is also fitted loosely within the draft rod in such a manner as to admit of a considerable rising and falling motion of the front end of the shoe, by which the guard fingers could be elevated and lowered to a considerable extent, and in substantially the same manner as they are capable of being raised and lowered in the McCormick machine. The raising and lowering in the Zug machine is also accomplished at a similar point and in a somewhat similar manner to said McCormick machine. This rising and falling motion of the finger bar in Zug, as before stated, is substantially the same as in McCormick, and only differs in degree.

"If the Zug machine had been given somewhat more of a rising and falling motion upon the guards on front of the finger bar, I do not see where it would have differed substantially in these respects from the combinations and movements in the McCormick machine for the same purpose.

"I therefore consider that the McCormick machine much more nearly resembles Zug in its attachments and motions than the patent to Graham of 1868."

But there was no occasion for Zug to enlarge on the purpose of this tilting movement. It was already old and a recognizable feature of such machines.

The Dolph patent of September 8, 1857 (p. 350), purports to be for an improvement on a patent granted Ball June 11, 1856 (not the Ball patent here in evidence, but an earlier patent to the same man).

It describes and emphasizes the tilting of the finger beam (which is shown as a floating finger beam with the same capacity for rising and falling at either end as the Graham), so as to raise and lower the points of the guards, a modification of the older Ball machine, so as to secure this tilting, being the purpose of the patent. In pointing out the objection to the Ball machine it, says (p. 351):

"The bar and cutters by this arrangement can not be raised entirely from the ground in a paralel direction; nor can the guards, K, and cutters be tipped up or raised from K to a position indicated by the line, *k*.

"What distinguishes my improvement in the described mower is the manner of raising and lowering or tipping the cutters and bar from K to *k* or any intermediate position. . . . By the raising and depressing of the lever the cutters and bar may be tipped more or less as the nature of the case may require, and may be retained in any desired position by slipping the lever into the teeth of the rack, *l*, which is attached to the frame."

The dotted lines in the drawing show the tipping movement to be that here in controversy. This machine has the floating finger beam combined with the gearing carriage by means of a vibratable link extending crosswise to the line of a draft, the draft rod extending parallel with the line of draft, a swivel joint in the draft rod, and a joint connecting the vibratable link with the frame which gives the capacity for adjustment required for tilting the finger beam, or enabling it to rise or fall at either end independently of the gearing carriage, and the lever by the arm of which the rocking of the finger beam is controlled, and by which it is positively fixed at any desired inclination. It has the swivel joint in the draft rod at the front end, instead of at a short distance in front of the finger bar. It positively controls the upward and downward tilt by means of it as does Graham. It represents the type of adjustment to which Graham's belongs, namely, that which is positive in both directions.

While the joint between the vibratable link and the

gear frame in the Dolph machine is not stated to be a swivel joint, and the drawing does not show whether it is technically a swivel joint or not, the positions shown to be assumed by the finger bar imply that it is. The drawing shows that it is, at least, a loose joint that would allow sufficient swiveling play for the purpose of this tilt, and the position to which the drawing and description show the finger beam tilted indicate positively that it has this swiveling movement. A perfect swiveling joint is shown at the front of the draft rod (where the drawing is such as to expose the full construction of the joint. Any mechanic having the movement of the finger beam indicated as it is in the patent, would understand the extent of the swivel necessary to be given at the joint, F, and the means of giving it, a swivel joint being the common method of providing for such a movement. In other words, the drawing and description together would imply to any mechanic that this link was to have at the point, F, as much swivel as was necessary to tilt the finger beam freely to the point shown in the drawing, and he would have before him in the patent an illustration of a perfect swiveling joint. In the absence of such illustration, it would be suggested to any intelligent mechanic as one of the means of making this connection. This swiveling joint is shown at this point in the Ball patent already referred to, and in other prior patents hereafter to be referred to. (*See Dep. Powers, p.* 295.)

If complainant had failed to state in his patent that the joint, M, swiveled, but described a movement that involved a swivel, an attack on the patent for insufficiency of description, would be ridiculed, since no mechanic would be in a moment's doubt as to the proper joint for giving the crosswise movement.

The Stetson & Maynard patent of May 17, 1859 (p. 355, prior to both the Ball and Zug), shows the floating finger beam with the forward and backward tilt (the rocking on a rear pivot), so as to give capacity for tilting the finger guards up and down to any desired extent. Of this, the witness, Powers, says (p. 296, A. 8):

"Stetson & Maynard Patent Exhibit, No. 24,063, shows a machine with a finger bar jointed to the rear end of the frame by means of a cylindrical formed connection, with the finger bar inserted in collars, or bearing upon the rear end of the frame in such manner as to admit of its turning or rocking freely forward and back in such bearings. To this cylindrical arm, connected to the finger bar, is attached a rigid lever extending forward to near the driver's seat, by which the said driver could rock the finger forward and back, or up or down to any extent desired.

"This construction admitted of a rising and falling motion to either end of the finger bar, and also of a rocking forward and backward motion, and this rocking motion produced by a rigid lever extending to the driver's seat, thus embodying substantially all of the motions and instrumentalities for producing those motions that are enumerated in the first and second claims of the Graham patent. Thus all of the motions and capabilities of the Graham patent and machine existed in this earlier machine of 1859, and the only differences between them consist of such differences in construction as are observable on a comparison of the two devices." (See drawing and specifications, p. 356.)

The Bardlett patent of February 25, 1862 (p. 368–9), shows the combination in a harvester of the floating finger beam with the gearing carriage by means of a vibratable link, a draft rod, and two swivel joints (one where the vibratable link is attached to the gearing frame, as in Graham, and the other in the draft rod), so that the finger beam may both rise and fall at either end, and tilt upward and downward, or rock forward and backward, on a pivot in the rear of the finger beam as in defendants' machine. It also has an adjustable lever by which this tilting movement can be controlled by the driver, so far as the upward tilt and the fixing of the limit of the downward tilt is concerned. This lever is, as defendants' machine and in the Ball machine, flexibly connected so as to allow of automatic upward tilt, and to deprive the driver of the power of giving it a positive downward tilt. After describing the construction of these parts, the specification says,

"The finger beam thus connected to the main frame

can rock or roll on a line at right angles to the line of motion of the machine, and also on a line parallel to the motion of the machine; or the finger beam can rise bodily, or at either end, and to conform to the inequalities of the ground over which it may be drawn, and that, too, independent of the up and down motion of the main frame.

"In order to prevent the heel end of the finger beam from dropping too low, and also to enable the attendant to adjust the pressure thereof on the stubble and ground, a lever, I, is hinged at its forward end by being slipped onto the end of the shaft or axle, *a*, which projects beyond the hub of wheel, B′, for that purpose, while the rear end of said lever, I, extends back over and rests on the rear inner corner of frame, A, and is provided with a hook, *q*, into which one of the links of chain, *q*, can be hooked, the lower end of the chain being fastened to the brace bar, G, in any suitable manner. It will thus be seen that the height of the heel of the finger beam can be regulated at pleasure simply changing the hook from one link to another.

"For the purpose of enabling the driver from his seat, J, to raise the heel of the finger beam, or to turn up the front of the guards and drag bar, the front end of lever, I, is provided with a circular slot, *s*, in which works a pin projecting from the inner side of a right angled lever piece, K, which is also loose on shaft, *a*, nut, *a′*, on the end of shaft, *a*, preventing both levers from working off. The upper outerside of K is cast with a recess to receive the long arm of lever, L, which is bolted or fastened thereto, while the outer arm, K′, extends forward, and is connected to the front of the drag bar by a chain device, L′, by taking hold of the upper end of lever, L, and drawing it back, can elevate the front of the drag bar to the top of the slot in the piece, G′, which may be of any desired height, in this case it being quite as high as the bottom side of the frame, A. This arrangement provides for elevating the points of the cutters and fingers to pass over slight elevations in the ground, while the heel of the finger beam is sustained by arm or lever, I, resting on the rear of the frame. . . .

"The chain device, L′, may be arranged similarly to that at the rear end of I, so that the height or elevation of the front of the drag bar and the fingers can be adjusted for continued use on rough or very uneven ground."

The construction here described enables the driver to tilt up the front of the finger bar in the same manner as

in the defendants, and at the same time to leave it free to rise automatically. (*See Dep. Powers, p.* 297, A. 8, *and certified model Bartlett Pat.*)

The Dodge patent, of May 23, 1865 (*p.* 371), has, in the respects in controversy, substantially the same construction as the McCormick, and the same movements. (*See Dep. Powers, p.* 298.)

The Ray & Grant patent, of November 18, 1865 (*p.* 374), has substantially the construction and operation of the Graham. After describing the mechanism, the patent says (p. 375):

"As the arm, F, is secured to the lever, J, by moving the lever as noted by the dotted lines in Fig. 2, the shoe and finger bar can be readily adjusted to any inclination either way, for the purpose of passing over obstacles or to be adapted to the inclination of the ground." (*See Dep. Powers, p.* 298; *also cert. Model of Ray & Grant Pat.*)

The Bramer patent, of December 19, 1865 (*p.* 376), shows a construction substantially identical with the Graham, except that the connection between the lever and the vibrating link is (like the Ball and Bartlett and defendants') flexible, so as not to interfere with the upward tilt, and so as to deprive it of the capacity of positively tilting the guards downward. The finger beam is placed in front of the carriage instead of behind, and a push rod substituted for the draft rod, and this is described in the Graham patent as an alternative construction. The vibrating link swivels on the gear frame in the same way as the Graham. It has the same forked shape as the Graham. There is a swivel joint between the push rod and the finger beam, giving the capacities for both vertical and crosswise tilt, as in the Graham. Complainants' expert says that this can be intended for but little rocking movement, but it has a capacity for considerably more movement than is employed in the defendants' machine, and this can be indefinitely increased by simply elongating the slot which limits it. He says also that it has no arm by which its movement can be controlled. This is true of the Bramer machine to the same extent that it is of the defendants'—that is, the movement

in the defendants, and at the same time to leave it free to rise automatically. (*See Dep. Powers, p.* 297, A. 8, *and certified model Bartlett Pat.*)

The Dodge patent, of May 23, 1865 (*p.* 371), has, in the respects in controversy, substantially the same construction as the McCormick, and the same movements. (*See Dep. Powers, p.* 298.)

The Ray & Grant patent, of November 18, 1865 (*p.* 374), has substantially the construction and operation of the Graham. After describing the mechanism, the patent says (p. 375):

"As the arm, F, is secured to the lever, J, by moving the lever as noted by the dotted lines in Fig. 2, the shoe and finger bar can be readily adjusted to any inclination either way, for the purpose of passing over obstacles or to be adapted to the inclination of the ground." (*See Dep. Powers, p.* 298; *also cert. Model of Ray & Grant Pat.*)

The Bramer patent, of December 19, 1865 (*p.* 376), shows a construction substantially identical with the Graham, except that the connection between the lever and the vibrating link is (like the Ball and Bartlett and defendants') flexible, so as not to interfere with the upward tilt, and so as to deprive it of the capacity of positively tilting the guards downward. The finger beam is placed in front of the carriage instead of behind, and a push rod substituted for the draft rod, and this is described in the Graham patent as an alternative construction. The vibrating link swivels on the gear frame in the same way as the Graham. It has the same forked shape as the Graham. There is a swivel joint between the push rod and the finger beam, giving the capacities for both vertical and crosswise tilt, as in the Graham. Complainants' expert says that this can be intended for but little rocking movement, but it has a capacity for considerably more movement than is employed in the defendants' machine, and this can be indefinitely increased by simply elongating the slot which limits it. He says also that it has no arm by which its movement can be controlled. This is true of the Bramer machine to the same extent that it is of the defendants'—that is, the movement

can be *controlled* only to the extent of moving it *upward* and fixing the limit of its downward movement. (*See, in this connection, Dep. Powers, p.* 299, *A.* 8.)

The Wemple patent of January 29, 1867 (*p.* 382), also has the finger beam pivotally connected with the gearing frame, so as to afford both the endwise and the crosswise tilt to any desired extent. It has the same capacity of movement as the Graham, with the additional advantage that, while it can be positively rocked backward and forward, it can be left free to adapt itself to the surface. Graham patent was rejected on this, and amended to avoid it. (*See dep. Powers, p.* 301; *Graham files, p.* 402, 403.)

The McCormick and Erpelding patent, of January 15, 1867, p. 378 (a patent issued to the defendants before the application for the patent sued on was filed), shows the floating finger beam connected with the gearing frame by a means giving the same tilting movements as in the defendants' machine, except that the tipping upward and downward of the fingers was positively controlled through a stiff lever. The construction of the connecting parts closely resembles the defendants' machine in controversy—the pivotal joint being at the heel—and shows the type from which they took their pattern for the shape and position of the vibrating link and draft rod. This machine was provided with a supplemental frame, having a vertically swinging movement, to which the vibrating link was attached, and the patent related to the interposition of this supplemental frame. The finger bar is pivoted at a point above and behind the shoe, as in the present defendants' machine; the vibrating link is on a swiveling joint that gives it the movements in both directions; the forward end of the shoe rests on the ground, so that its weight tends to hold it downward. The specification states (p. 379) the improvement to consist:

"*Second*, in combining with the supplementary frame, hinged as described, a finger-beam, pivoted at the heel of the shoe to the inner rear corner of the supplementary frame by a swiveling-joint, and at the front of the shoe to a pivoted coupling-arm passing over the supplementary

frame and secured to the outer side thereof, and a rocking-lever pivoted to the supplementary frame and coupling-arm to rock the finger-beam axially; *third*, in a lever which serves both to lock the finger-beam and to raise it horizontally or parallel to the ground; *fourth*, in combining with the hinged finger-beam, a rocking-lever to rock the beam axially, and a lifting and locking-lever, which raises the beam horizontally."

In describing the construction, it says (p. 380):

"A rod, *n'*, is pivoted to play vertically in the rear lug, *o*, while it has an axial rotation in the lug, *n*, so as to allow the finger-beam to rise and fall at its outer end, and to rock axially to raise or lower the points of the guards, while it also rises and falls with the supplementary frame."

And again (p. 381):

"As the machine advances (when in operation), the supplementary frame rises and falls to conform to the undulations of the ground over which the shoe, *o*, passes, while the divider end of the finger beam is free to rise and fall above or below the plane of the shoe. The driver can raise or depress the points of the guards by means of lever, T."

Whether the Graham invention is to be judged by the art as it existed prior to the date when he claims to have first made it (January 18, 1863), or whether the art at the time of his application (February 11, 1867), consisted fundamentally and solely.

1. In the transposition of the pivotal connection between the shoe and draft rod from the rear of the bar to the front of it (M' of his patent), so as to convert the free swinging tilt into a positive forward and backward rocking movement, alternately raising and depressing the heel and toe respectively, while the pull of the drag bar controlled the position of the guard fingers which its push had before permitted to automatically adapt themselves to the surface; and,

2. In the substitution of the rigid arm controlling the movement in both directions (made necessary by this trans-

position of the pivotal joint) instead of the flexible connection which could only lift the guards, left them always free to rise, and afforded no means of pressing or holding them down.

It eliminated the capacity of the finger beam to automatically adapt its front or working edge to the surface over which it travels, and substituted a positive control over its movements both forward and backward, with a consequently greater capacity for arbitrary adjustment.

The construction of his tilting lever with a spring bolt normally engaging in the notches of a segment over which it travels, so that it would always be positively locked against movements in either direction was *not an incident* but an *indispensible feature* of his construction. As the pull of the draft rod on the pivot, M', would always tend to hold the guards at a fixed inclination relative to the front of the machine (irrespective of the contour over which it is traveling) the guards could only be tipped up or down from this fixed position by the intervention of the operator, and could only remain in their adjustment (no matter what the surfaces over which they were traveling), so long as the lever was locked or held rigidly in place. By this construction, the bar can be tilted forward so as to force the fingers downward, and the heel upward, and compel the guards to dip under lodged grass or grain which, if left free, as in defendant's, they would tend to ride over. There may be rare conditions under which this capacity would be of advantage, but it is only obtained by the rigid downward support, and at the expense of the capacity for automatic adaptation to the surface, and Graham has been left in undisputed possession of it.

In *Graham* v. *Gammon*, 7 Biss. 490, the case in which this Graham patent was first sustained, and which has been accepted as establishing its validity, it was only sustained with limitations to the specific construction (the infringing machine in that case corresponding with the patent in features in which the present defendants' depart from it), the court there distinguishing between the Graham and the Ball by saying of the Ball (p. 493):

"*But there is no joint forward*, and no means by which the mechanism—the finger-bar as such—*can be rolled or tipped in the manner provided by the Graham patent.*"

This applies to defendants' machine precisely as it did to the Ball, but the patent having been sustained, the limitations upon which it rested were overlooked in subsequent cases.

So, in speaking of the Bartlett and Dodge patent, Judge Blodgett said that there was:

"*No device for rocking or rolling.*"

And again, in speaking of the Zug:

"*There is no possible device in the patent for rocking*, and no device or means by which the finger-beam *can be rolled or tilted in the manner provided in the Graham patent.*"

Now, in each of these patents, there was a provision for lifting or tilting up the front of the finger-bar without raising the heel, precisely as in the defendants', and it was upon the distinction between this capacity for rolling or tilting the finger-beam in the manner that is done in the Graham and the swinging movement, controlled in one direction only, that the patent was upheld.

Judge Blodgett speaks of the "long shoe" in the Zug patent, and also in the Bartlett and Dodge, as interfering with the rocking or rolling movement of the Graham. Now, the shoe of the defendants' machine rests on the ground as far forward as does the shoe of the Zug or the Bartlett or the Ball. Either of them could be turned up more abruptly if desired, but it is necessary to have them act as a stop to prevent an excessive downward tilt, which would hazard running the fingers into the ground. The upturned point of the Zug shoe and the draft-rod of the Ball and the Bartlett serve the same purpose as the *guard rod* of the defendants' machine (shown as R, Fig. 15, which is a cut of defendant's machine complete, this rod having been omitted for clearness in other cuts), which extends from

the front of the shoe forward to the draft-rod; namely, to prevent grass, grain, or other obstructions getting into the joints at the inner end of the beam and impeding the movement of the reciprocating rod that drives the knife, or the pivotal movement of the beam. This rod in the defendants' machine would be more of a limitation upon the downward movement than the upturned shoe of the Zug, but either of them affords all the range of downward movement that can safely be allowed, or that there is any practical occasion for.

Judge Blodgett also held (7 Biss. 496), that a loose joint that allowed the requisite play would be the equivalent of a swivel joint.

The patent was first attenuated till it would pass through the eye of a needle, in order to escape anticipation, and then, when this peril was passed, expanded to the dimensions of a continent, by courts which treated its validity as already concluded, in order to subordinate independent movements which moved on different lines of progress.

SECOND. LIMITATIONS INDICATED BY THE PROCEEDINGS IN THE PATENT OFFICE.

The claims for this device were constantly rejected until limited to the swiveling joint, M', as distinguished from a swiveling joint located elsewhere, and to the capacity for being rocked both forward and backward, while having the inclination controlled by the rocking arm, and these elements combined with the others "as set forth."

Graham first claimed this device in a patent which was applied for December 4, 1865, and issued July 23, 1867. *See abstract of files, Graham* 1876 *patent, p.* 412, *and specification, p.* 407. (Some of the letters of the attorneys in these files refer to the application as dated December 2, 1865, apparently the date at which they mailed it from their office, as the government record, and all the government letters show the date to be December 4, 1865). In that ap-

plication, this part of the invention is stated as follows (p. 408):

"The invention has further for its object the free passage of the finger bar over the ground, and the perfect moving of the former to adjust itself to the inequalities of surface over which it may pass. . . ."

In the description, parts which are the same as in the patent in suit are designated by different letters, the finger beam being marked I instead of G; the vibratable link L, is called bar J; the swivel joint between this link and the frame, is marked K instead of M; the swivel joint and the draft rod is marked C instead of M. The rigid arm by which the vibratable link is connected with the lever for giving the rocking movement, is marked *m*, and the lever, with its spring locking bolt is marked M instead of P. The description is as follows:

"I represents the finger bar, the inner end of which is attached by a joint, *h*, to a bar, J, which is at the rear of the main frame, *a*, and is connected thereto, at its left hand side, by a swivel or universal joint, K, as shown in figures 2 and 3, said joint being composed of a rod, *i*, which is allowed to turn into a bearing, *j*, attached to the main frame, and the end of the bar, J, being cylindrical, and allowed to turn in the rod, *i*, as indicated by the arrows. Figure 3, it will be seen, is a section of the joint taken in the line, *y y*, figure 2, and this joint admits of the bar, J, and finger bar, I, being raised vertically, and also admits of said bars being turned in a more or less inclined position, in their transverse section, to admit of the fingers, *k*, and sickle, L, being turned more or less down toward the ground, as may be required. This adjustment of the fingers, *k*, and sickle, L, is effected through the medium of a lever, M, which is connected by a rod, *l*, with an upright, *m*, on bar, J, shown in figures 1 and 2. This lever, M, may be retained in any desired position within the scope of its movement by means of a perforated bar, *n*, into the holes of which a pin, *o*, on the lever catches. Other fastenings, however, may be employed for this purpose."

The first claim of this patent is as follows (p. 409):

"1st. The attaching of the bar J to the main frame A by means of the swivel or universal joint K, when used in combination with the finger bar I, attached to it by a joint, *n*, and this I claim irrespective of any peculiar position of the parts or particular application of the same to the frame of the machine, so long as the desired result is obtained."

This claim was rejected for want of novelty. (See Pat. Off. Let. Dec. 50, 1865, p. 410.) It was then (March 23, 1866) amended by striking out this claim and substituting the following (p. 411):

"The combination of the finger bar I and bar J attached to the frame A by means of the universal joint or swivel K, in the manner and for the purpose herein specified."

This claim was rejected for want of novelty by Patent Office letter of April 4, 1866 (p. 410). It was again amended June 18, 1867 (see letter, p. 412), by striking out this claim, the letter by which it was stricken out stating that:

"The effect of this amendment, as your Honor will perceive, is to limit the invention claimed under the patent to what your Honor has stated in the official letter of October 1st, 1866, to be allowed."

The patent then issued with the following disclaimer (*see Graham patent of July* 23, 1867, *stip. end of Rec., p.* 3):

"I do not claim the connecting of the finger-bar I to a bar J by a joint *h*, for that has been previously done."

The bar J here referred to is the vibratable link L of the present patent. As this patent issued the files connected with it indicated that this feature of the invention had been abandoned. The claim that was rejected and striken out corresponds with the claims here in controversy, except that it does not specify in terms the swivel joint in the draft rod and the rigid arm by which the movement in both directions is controlled; but both these elements are shown in the patent, and were essential to the operation of the elements

recited in the claim, so that they might fairly be imported by the language "in the manner and for the purpose specified." The combination, in terms recited in the claim, would be inoperative without the swivel shown in the draft rod.

As this patent issued, the file indicated affirmatively that this part of the machine was abandoned after rejection, and there was nothing in the record from which the public could have learned that the patentee had, after striking out this claim, made a subsequent application for the same subject-matter.

The subsequent application was not made as a *division* of the first (which would have involved some notice in the record of the first, that a part of this subject-matter had been withdrawn and transferred to another pending application), but was made independently, and, like all applications, withheld from the public until issued.

In the new application (that for the present patent) the capacity for "rocking forward and backward," for "setting its guard fingers at any desired inclination to a horizontal line," and the "control" of this forward and backward movement were constantly dwelt upon. The patentee does not pretend that he is the first to introduce this crosswise tilt, and the exact construction by which the finger beam is given its capacity for rising or falling at either end had been in terms disclaimed as old in his prior patent. He states the object of his invention (so far as it relates to the feature in controversy) to be (p. 390) "to obtain a *greater* capacity of movement in the floating finger beam!" Then, after reciting the elements of his first claim (all of which had been before combined to give the tilting or swinging movement), he states the object of the combination to be

"so that the finger-beam would rise or fall at either end, and rock forward and backward independently of the gearing carriage while maintaining its connection with it."

Then, in stating the combination upon which the second claim is founded, he states one of the elements to be

"an arm connected with the finger beam to enable it to be locked for the purpose of setting its guard fingers at any desired inclination to a horizontal line."

After describing swivel joint M and the mode of connecting it with the "joint bolt *a*," he says (p. 395):

"This swivel joint, therefore, while maintaining a firm connection with the draught rod, gives free play for both the longitudinal and rocking movements of the finger beam. Hence, when the machine is used for cutting grass, the said finger beam may be left free, not only to rise and fall at either end, but also to rock or be rocked forward and backward, so that the points of its guard fingers incline toward or from a horizontal plane.

"In order that the finger beam may be rocked by the conductor of the machine, the vibratable link L is fitted with an arm, *l*, whose upper end is connected by a rod with the lower end of a lever, P, that is pivoted to the gearing carriage near its forward end. The upper end of this lever P extends within the reach of the driver, who sits upon the driver's seat Q, so that he may rock the finger beam by moving the said lever to and fro. This rocking lever P is fitted with a spring bolt, whose end can engage in any one of a number of notches formed in a segment, R, which is attached to the gearing carriage concentrically with the pivot of the rocking lever, so that the finger beam may be fastened in the desired position by the engagement of the spring bolt in the appropriate notch. The rocking lever is fitted with a lever handle, *p*, and rod connecting with the spring bolt, by which the spring bolt may be withdrawn from the notched segment and held disengaged therefrom during the movement of the lever."

The expression "rock or to be rocked forward and backward," taken by itself, apart from the context and the mechanism shown, might be taken as indicating that this could rock automatically, but the construction is such as to make this impossible, since the lever is always locked in position, and if the lever were removed (which would destroy the mode of operation essentially to the machine as well as remove an element that is recited in the next claim) the finger beam could not rock backward and forward, but would be held by the pull of the drag bar on its

front pivot in a plane determined by the point of attachment of the front end of the drag bar.

Further on the specification speaks of the object of this rocking movement thus (p. 298):

"In order that the finger beam may be rocked to depress or raise the points of the guard fingers when the machine is used for reaping grain, the raking platform W is not attached rigidly to the finger beam, but is attached to it by hinges g^4 g^4, Fig. 1, so that the finger beam may be rocked while the platform retains its position, . . . hence the rocking of the finger beam is not prevented by its combination with a raking platform or a grain wheel, but is under *control of the driver, who effects it by means of the rocking lever P, as may be found expedient to cut the grain at a greater or less distance from the ground, or to raise up lodged grain.*"

Its operation in cutting grass is then described as follows:

"When the machine is to be used for cutting grass the reel V, radius bar X^2, and platform W, with the reel supports, divider frame, and caster wheel T are removed from the finger beam G, and a small grass divider, with a track clearer is bolted to the outer end of the finger beam in the place of the outermost finger, as represented at V^2, Fig. 7. *The rocking of the finger beam is then under the control of the driver, who effects it by means of the rocking lever P, as may be found expedient, to conform to the surface, ever which the cutter is passing.*"

The first and second claims of this application as first submitted were as follows:

1. The combination in a harvester of the finger beam with the gearing carriage by means of a vibratable link, draught rod and two swivel joints, so that the finger beam may both rise and fall at either end and rock forward and backward substantially as set forth.

2. The combination in a harvester of the finger beam gearing carriage, link-draft rod, swivel joints and arm by which the rocking of the finger beam is controlled, substantially as set forth.

Both of these claims were rejected for want of novelty, the Bartlett, Dodge and the Wemple patents heretofore cited being among the references given. *See Office Letter of July 29, p. 402.*

The claims were then amended to limit them more specifically. In the first claim, before "vibratable link" the indefinite article "a" was stricken out and the definite article "the" inserted. The definite article "*the*" was also inserted before "draft rod," and in place of the general reference to two swivel joints were substituted "*the two swivel joints M and M'*," thus designating and locating the particular joints referred to. The words "*as set forth*" were inserted after "combination" at the beginning of the claim, so as to more definitely limit the combination to the exact construction shown.

The second claim was modified by inserting after the words "combination" the words "*as set forth*" and by inserting after gearing carriage the word "vibratable."

The intention of the office to limit the two claims as nearly as possible to the specific construction, and particularly to the peculiar location of the swivel joints referred to, and to the arm which *imparted* and *controlled* the rocking movement of the beam, could not be more clearly indicated. These specific limitations indicated all that there was to distinguish the construction from the prior combinations of the same elements, as already illustrated by reference to the prior art under the head of "Device in Controversy."

So far as the effect of the prior patents upon the construction of the Graham patent is concerned, it is immaterial whether they were issued prior to the date when Graham now claims to have made his invention, or subsequent to that date, for they were treated both by him and by the office as references to be avoided by amendment.

He did not ask for an interference or file affidavits to carry his invention behind them, but simply amended to avoid them. His patent therefore was, with his acquiescence, confined in terms to that which distinguished it from all the patents issued up to that date, namely; *first*, this

pivotal joint M′ located at a point that gave the finger beam the *rocking* movement on the swinging pivot, as distinguished from the *swinging* movement on a fixed pivot, and which *pulled* the front of the finger beam in the line of draft instead of *pushing* it from pivot behind through a pivot constantly resting on the ground and leaving the movement of the guards free; and, *second*, the *rocking arm* which *rocked* backward and forward and arbitrarily *controlled* the tilt in both directions, as distinguished from the loose *lifting* link or chain which was incapable of applying a rocking movement and afforded no control of the angle at which the beam traveled.

THIRD.—NO INFRINGEMENT.

Whether the patented device is considered with reference to the peculiarities of structure which distinguished it from former machines, or with reference to the mode of operation introduced by it, or with reference to the result accomplished, defendants' machine does not adopt either, but adheres to the prior type in every respect in which Graham departs from it.

Defendants' machine pivots the finger beam to the draft rod at its rear, which is the point where Ball, Zug, Bartlett and other prior patentees placed the pivot for the tilting movement.

The front or working edge of the finger beam is left free to swing up or down, or to be tilted or lifted up by a loose link, as in the Ball, Zug and Bartlett, but can not either rock or be rocked forward and backward.

The pivot on which this swinging movement takes place does not rise with the upward tilt of the guard fingers (as in the Graham) and fall with their downward tilt, but rests on the ground irrespective of this tilt (as in the former machines) and keeps the heel of the finger beam always close to the surface.

There is no pull on the front of the finger beam tending to hold it in a fixed plane corresponding to that of the draft rod, but it is free to follow the surface over which it is traveling unaffected by any tension on the draft rod.

While any forward rocking of the Graham finger beam

tends to lift its heel off the ground so that the guards have a *greater downward inclination than the surface over which the bar is riding* and are liable to be forced into the ground, the swinging movement of defendants' on pivot at its heel tends to keep the bar *flatwise* on the ground, and enables it to *conform to its surface*, precisely as in the prior patents. It can not be *forced down* or *held down* against lodged grass or grain or other objects that tend to tilt it upward. Its capacity to tilt under or bear upon such objects is limited to the resistance which its weight in front of its pivot opposes to them, just as in the prior machines referred to. This resistance can not be supplemented by any force applied through the lever or by the operator.

Its inclination can never be *controlled* by the driver; it is always free to turn upward and can not be actuated downward.

Its tilting being on a rear pivot that is not raised or lowered by the forward or backward tilt of the fingers, there is no tendency in this movement to disturb the alignment of the finger bar (that is, to throw its outer end forward or backward), as in the case of the Graham, and the clamping of the reciprocating cutters, and other difficulties that would be due to this forward pivot, are avoided, as in the older machines.

The finger beam rises and falls, in its endwise tilt, precisely as in the older machines. The axial line on which this tilt takes place remains the same, as in the Ball, the Zug, and indeed all the prior machines. This was expressly admitted to be old in the Graham patent of July 23, 1867. *See disclaimer immediately before claims, p. 3, Stipulation, end of Record.*

In the Ball machine, the joint which gives this endwise tilt is placed at the front end of the drag bar instead of at the heel of the knife, as in the Zug and Bartlett. But this does not alter in any respect the nature or effect of this adjustment.

The defendants have not put the swivel joint, on which the Graham patent describes this up and down movement as taking place, where Graham put it, but have put it

where Zug and Bartlett put it and where the former Graham patent admitted it to be old as a connection between the floating finger beam and the vibratable link described in that patent, which was the same as that described in the patent in controversy.

The fact that the draft rod of defendants' machine reaches the point of its pivotal connection with the finger beam or shoe by being bent up over the shoe instead of bent under it to reach the same pivotal point (as in the Ball) does not affect its office or operation, so long as it is a rigid bar having no point of flexion between the rear pivot and the front end of the machine. In each case it presents a rigid pivotal support at the same point, and one which remains *constant* whether the finger guards are swung upward or remain on the surface. It occupies no more space under the beam in the Ball machine than does the shoe in defendants' machine. In each case there must be a shoe beneath of sufficient thickness to afford a rigid resistance to any obstacles that are encountered, and to hold the bar itself high enough so that its fingers will not be thrust into the ground. The finger beam can be placed as low and its fingers brought as close to the ground in one case as in the other. The draft rod of the Ball is not under the *working part* of the finger beam, where the fingers are placed and the cutting is done, but at the inner end which travels over the surface that has already been mown. With the Ball machine the front edge of the finger beam could be sunk just as low as the surface of the ground over which it was traveling would permit, subject to the liability of being tipped up when it encountered lodged grass or grain or other obstacles, and when it encountered these the action would be precisely the same as in defendants'. The fingers would tilt upward, and the driver would have no means of tipping or holding them down, as in the Graham.

In the defendants', as well as in the Ball machine, there is a shoe at each end of the finger beam projecting in front of the guards and causing the beam to rise whenever an inclination extending to the path of either shoe is

reached. It is never practicable to allow the finger beam to tip lower than these shoes would travel.

But if the construction of the draft rod, which carried it to its rear pivot behind the shoe by bending over rather than under the inner end of the bar were of any consequence, this was not borrowed from Graham. He did not use it. If he had adopted it his device would have been essentially different from what it was, and would have lacked all the properties that distinguish it and most of the defects which have rendered it worthless.

His draft rod only reached to a point in front of the finger beam, and was connected with it by what he called a "joint pin." This joint pin was rigidly connected to the shoe of the finger beam, so that there could be no crosswise tilt of the finger beam with respect to it; that is to say, there was no play between this joint pin and the finger beam by which the upward and downward tilt of the fingers could take place. That play was necessarily at a point in front of the shoe where the pin connected with the draft rod, and the pin itself moved upward and downward with the shoe when rocked. It constituted the hinge for the *endwise* tilt of the bar which was disclaimed in the former Graham patent, and which was identical with that shown in the Zug.

The draft rod bent upward, and reaching the heel from above was shown in the Zug patent and the McCormick and Erpelding patent. These defendants begun the manufacture and use of the McCormick and Erpelding machine in the summer of 1865. (*See dep. Hanna, p.* 3, *A.* 5–7; *p.* 13, *A.* 1; *dep. Baker, p.* 3–9, *A.* 10.)

As Graham did not in his proceedings in the Patent Office undertake to go behind any of the prior patents, but *amended to avoid them*, his patent can not now be *construed* as relating to features that were common in the prior patents, no matter how far back he may seek to carry his invention.

The peculiarity which distinguishes the draft rod of defendants' machine is that it is extended flatwise in a vertical plane, (that is, parallel to the plane of the drive

wheels), and at its front end passed through a mortise and curved upward and secured in a vertical slot, the object being, as stated in defendants' patent, to give it a free upward and downward motion while preventing it from turning over sidewise. This gives a rigid and inflexible support from the heel of the shoe to the front of the machine that is not disturbed by any tilting of the guard fingers. This feature distinguishes the defendants' draft rod from the Graham as well as from prior patents.

Ball and the defendants' reach the same pivotal point for the tilting movement by different paths. Graham did not reach that point by either path, but transferred the pivot for this tilting movement to a point in front of the bar, where its effect was reversed.

Defendants' patent (p. 330) was introduced by complainant apparently for the purpose of showing that the term "rocking" had been used in describing the tilting movement of the finger beam, and that some broad claims for a rocking movement and for a forked coupling arm were rejected on reference to the Graham patent.

But while the term "rocking" is used in speaking of the movement of the finger bar it is described as rocking on a pivot "*on the rear end of the shoe*," which gives the exact swinging movement of the Ball patent upon the same pivot. The fact that it is left to rock "FREELY" on this pivot is emphasized.

The broader claims, as at first submitted, would have been met by most of the prior patents that have already been referred to. The Graham being one of the more recent, illustration of the combination of the vibratable link, finger beam and draft rod, giving the tilting movement, was naturally referred to as a reason for refusing the broader claims while allowing the claims for a specific construction. The claims thus rejected were granted when amended to recite the defendants' construction. One of them, as allowed reads:

"The combination, as hereinbefore set forth, of the shoe and the drag bar extending over and in the rear of

the shoe and its swivel pin connecting it with the end of the shoe, whereby the drag bar sustains the thrust of the shoe while leaving it free on its hinges."

The other was amended by inserting after the words "drag bar" the words "*extending beyond and in the rear of the shoe*, a swivel pin connecting the two," and allowed.

A reference to a prior patent in rejecting a broad claim does not signify that the prior patent covers the device referred to, but only that it shows something that requires a limitation of the claim. All the patents since the Ball and the Zug, relating to the means of making this jointed connection and providing for the tilting movement, have necessarily been very closely limited to specific mechanical constructions, and most of them, if capable of being sustained at all, can only be sustained as covering the exact mode of construction when operating to produce the precise movement exhibited.

FOURTH. GRAHAM'S DEVICE NECESSARILY A FAILURE.

The departure which Graham made was one which no experienced manufacturer would ever follow. By destroying the capacity of the machine for automatic adaptation to the surface, and disturbing the alignment of the bar whenever tilted, it doomed every machine which incorporated it to be banished from the market and the field.

It was hastily abandoned by each of the successive firms that were formed to manufacture it, and disappeared permanently about the time the patent was issued.

The difference in the history of the type of adjustment used by Graham and that used by defendants illustrates their radical difference in respect to adaptation to practical work.

The Ball type has been extensively on the market for more than thirty years. The defendants were licensed manufacturers of the Ball machine, and the terms in which their license (executed after the Ball patent of 1859 had expired) refers to it, illustrates that it was a well recognized type of machine improved upon by subsequent pat-

ents. The material part of the granting clause was as follows (p. 278):

"The said party of the first part hereby assigns and conveys to said party of the second part the full right and privilege to manufacture and sell to others to be used what is called the Ball or Ohio reaping and mowing machine, or mowing machine, it being understood that said Ball machine contains in its construction the devices covered by the patents above referred to, said machine hereby intended being the same machine as improved and constructed by said party of the second part, and now remaining in their reaper and mower factory in Chicago, and marked 'McCormick's Improved Ohio Machine,' or a machine substantially so constructed. . . .

"And it is understood that this agreement extends to and includes the right to make and sell the said Ball machine as aforesaid, either as a mower or a combined reaping and mowing machine, with the addition to it of the usual McCormick reel and rake, attached substantially as it has usually been in said Ball machine."

Under this license (which included a large number of patents) royalties were paid on all the machines now charged to be an infringement of the Graham patent. (*See dep. Hanna, p.* 170, *A.* 26, *Rec.*)

Graham claims to have made his invention and completed his first model of it in December, 1862, or January, 1863. He made an arrangement with Porter & Bro. to manufacture and sell these machines in February, 1863. Porter & Bro. manufactured some ten or twelve machines in the spring of 1863. They tried to manufacture again in the spring of 1865, but most of the machines came back on their hands, and they abandoned the enterprise as unprofitable.

In February, 1864, Graham made a contract with Cleveland, by which Cleveland was to have an exclusive right to manufacture and sell this machine and all improvements. He put $15,000 into the business, and undertook to press the manufacture and sale of these machines, sharing the net profits with Graham. He abandoned the enterprise at the end of the year as unprofitable.

In the spring of 1866, Graham made an arrangement with the Werdens to manufacture, and granted them an exclusive license to this machine and all subsequent improvements that might be made by him, and a two-thirds interest in the patent to be applied for thereon, they to pay him one-third of the net profits from the manufacture.

They made a few machines in 1867–8–9, were not successful in selling them, made no profits, and abandoned the business. Graham's own account is as follows (*p.* 139):

"They said they could not and would not undertake to build the machines the contract called for for the next year. They proposed to me to build a few machines just now, and keep up appearance until they had disposed of the stock on hand. . . . They finally told me in this conversation that they would not build the machines called for if they had to sell the machines on hand for old iron."

(*See dep. Graham*, *p.* 106, *A.* 4; *p.* 124, *A.* 66–69; *p.* 131, *A.* 112–113; *p.* 133, *A.* 134; *p.* 138, *A.* 29; *dep. Ward*, *p.* 99, *A.* 3–5; *p.* 100, *A.* 1–13; *dep. Porter*, *p.* 101, *A.* 2–9; *p.* 103, *A.* 1–23; *dep. Graham*, *p.* 100, *A.* 4; *p.* 107, *A.* 4; *Cleveland Contract*, *p.* 326; *Werden Contract*, *p.* 156.)

All these parties abandoned the manufacture as a failure after investing considerable money and time in it. They were to have an exclusive right in the invention. They had every inducement to push the business. There has never been a period more favorable to the introduction and profitable manufacture of machines of this class (if they were successful machines) than the years between 1863 and 1870.

The fact that the Werdens preferred to let the machines on hand go for old iron rather than to manufacture the hundred called for in their contract is most significant as to their conviction that the machine could not succeed. It was the same conviction that had been reached by all the other firms that took hold of it.

This ends the history of the Graham machine. It has never been heard of since. No witness testifies to ever having seen such a machine work in the field or on the

Figure 12.

Figure 13.

Figure 14.

market since it was abandoned by the Werdens. Hugh Graham, the complainant, never undertook to manufacture.

Fig. 12 will illustrate one of the reasons why the Graham construction could not find a place in the market or in the field. The hummocks or other obstacles which the bar is liable to encounter, and the holes into which it may dip, are often so concealed by the grass that they would not be visible to the driver if he were watching for them, and even if he saw them it would be impossible for him to arbitrarily tip the bar to just the right angle and at just the right time.

If, therefore, a machine having the Graham construction encounters such an obstacle when it is concealed by the grass, or when the driver's attention is off, the guard fingers will plow into it, and breakage is likely to result. This would be so, irrespective of whether the lever was locked in position or out of engagement, since the tension through the draft rod exerted in front would guide the guard fingers and prevent their free adaptation to the surface.

If the bar has been tilted upward and passed over a hummock the guards will project forward, as illustrated in Fig. 13, instead of tipping down into the hollow beyond.

If, in passing down a declivity, the bar has been set to conform to the declivity, and the driver fails to readjust it at the moment the bottom is reached and a rising surface encountered, the guards will be run into the ground at the bottom, as illustrated in Fig. 14.

If either the Ball, the Zug or the defendants' construction is used the finger beam will automatically adapt itself to all these several surfaces without any intervention from the driver, while if for any reason the driver wishes to suddenly raise the guards, or to set them at any upward inclination, he can do so through the lever without disturbing their capacity to still yield to any obstacles they may encounter.

Complainant has offered in evidence advertising circu-

lars of defendants, which lay stress on the virtues of defendants' various mowing machines, among others that here in controversy, and has seemed to suppose that the court would assume that all these virtues were due to something borrowed from Graham.

Now, these circulars give great prominence to the fact that the machines mentioned took the grand prize at the Paris Exposition of 1867—before the Graham patent was granted, and before the particular construction charged to constitute the infringement was incorporated in them.

If defendants had followed the Graham construction, they would probably never have sold machines enough to pay for printing these circulars. Their machines have sold by the thousands, where the Graham could not be sold at all. They have found acceptance sufficient to justify these circulars. But this has been because they have conformed to the Ball type, and because they have avoided the Graham construction as one which their experience in building and selling machines taught them was not adapted to the practical conditions encountered in the field, and because of many other features which have given them a world-wide reputation.

Every year brings into this art hundreds of patents which represent only impracticable experiments, which it is as necessary to reject in order to make a successful machine, as it is to include really valuable improvements.

If defendants had copied the Graham plan of construction, instead of adhering to the Ball, they would not have had to account for upward of thirty thousand machines. It is doubtful if they could have sold three hundred.

27

FIFTH.—WANT OF NOVELTY AND PATENTABILITY.

Unless complainant's claims are limited to the location of the pivotal joint, which affords the rocking movement between the finger beam and the draft rod, at a point in front of the finger beam, and to the rigid arm, by which the rocking motion is imparted, each of the combinations recited in the first and second claims are in terms and substance anticipated.

Figure 15.

McCORMICK ADVANCE.

(Defendant's Machine.)

If they are so limited, the question of their novelty and patentability is immaterial.

Most that needs to be said on this subject has already been said in the description of the device in controversy, and the recital of the prior art.

If the term "*the two swivel joints, M and M'*," are to be taken as referring to any swivel joints in the vibratable link and draft rod, respectively, which admit of both the rising and falling of the finger beams at either end, and the rocking forward and backward, and the term "rocked forward and backward," is to be taken as including the swinging movement on the rear pivot, the patent is precisely anticipated by the Ball, the Bartlett, the Zug, and the Bramer, and substantially so by the Dolph, and the Ray & Grant. It was only when these precise limitations were introduced that the patent was allowed.

The modification of the Ball machine on which the charge of infringement rests, consists in transposing the pivot, on which the finger beam turns up *endwise*, from the front end of the draft rod to the heel of the shoe. The pivot for the *crosswise* tilt or rocking movement, remains precisely as in the Ball machine. This change in the location of the pivot for the endwise tilt does not alter either movement, it being simply a mechanical alternative to have the journal for this movement between the draft rod and shoe, instead of between the draft rod and the gear frame.

But when Graham, in his first patent, after describing the endwise tilt, which takes place at what he terms the joint, *h*, in his first patent, and which, as there shown, *involves the pivotal or swiveling play between* the draft rod and the finger beam, as the finger beam turns up, and stating the purpose and effect of this movement in substantially the terms of the second patent, took out this patent with a *disclaimer reciting this joint as old in the combination in which it was there exhibited* (being the same combination in which it is exhibited in the present patent), he had concluded himself against resting any subsequent patent on any use of that joint in that combination affording the

movement described in the patent in which it was disclaimed.

Moreover, that this patent was not granted, and can not be sustained, as covering the joint for both endwise and crosswise play at the heel of the shoe used by the defendants, is plainly indicated by the fact that defendants already, before the application for the patent in suit, had a patent (McCormick & Erpelding, January 15, 1867), for this identical joint at the heel of the shoe of the bar giving both the crosswise and the endwise tilt as in their present machine, and while the patent office rejected the Graham application on a patent subsequent to this (that of Wemple, January 29, 1867), and Graham amended to avoid it, no reference was made to this patent, as there must have been if the Graham application had been regarded as covering such a joint.

The crosswise tilt was old, and the swivel joint was the common means for providing for such movement in mowing machines. (See *Penn. Rd.* v. *Locomotive Truck Co.*, 110 U. S. 490; *Hendy* v. *Miner's Iron W'ks*, 127 U. S. 370.)

SIXTH.—TWO YEARS' PUBLIC USE.

The Graham machine containing the device in controversy, was manufactured in numbers, for sale, in the spring of 1863, *and put on sale, and in practical use throughout the harvest of* 1863. *The same was true at the harvest of* 1864. *The application was filed February* 11, 1867.

Evidence as to this prior public use and sale comes mainly through Graham and his personal friends, who had been interviewed by him before testifying, and are disposed to strain every thing in his favor; but what is admitted by them is sufficient. It is shown that Graham made a contract with Porter & Bro. for the general manufacture and sale of machines containing the device in controversy, in February, 1863; that at least ten or twelve such machines were manufactured during the spring of 1863; that at least four were put into practical use during the harvest of 1863, several of them being sold; that another contract was made with Cleveland, February 4, 1864,

whereby he undertook to manufacture and sell, for that season at least fifteen of these machines; that he did manufacture and put upon the market about that number during the spring and summer of 1864, and that a portion of them went into practical use during that harvest.

It is claimed in behalf of complainant that these manufacturers, sales and uses were experimental; that the machine did not prove a success, and some of them were returned.

These were apparently *commercial* experiments, and like all subsequent experiments with the Graham machine, proved commercial failures.

But the law does not suspend its operation for such experiments, or limit its application to inventions that prove commercially successful.

It in terms makes the putting "in public use and on sale" for more than two years prior to the application a waiver of any right to a patent and conclusive notice to the public that no monopoly is asserted; or rather, it makes an application within this time a *condition of obtaining a monopoly*.

It is not necessary that there should be even an actual sale, providing the article is either *publicly used* or *put on sale*. The fact that it proves unsalable does not entitle it to indulgence.

The courts have held that such experimenting as was necessary to test the operation of the invention, *where this, rather than the practical use or sale of the machine was the primary object*, where there was *no sale or authority to others to use or sell*, and where it was not extended beyond what was, *in view of the special character of the invention, necessary to test its operation*, would not bring the inventor within the terms of the statute. But the theory that a *mere mechanical* modification (the operation and effect of which could be determined fully in a day's experiments) could be manufactured for sale in quantity and sold to users for practical use, and used by them in the regular course of business through one or more seasons, and the operation of the statute (which is strict in its terms), be

suspended, because the machine as a whole did not prove very satisfactory or salable, is original with this case, and certainly has not heretofore received any countenance in the decisions of this court.

There are cases where the nature of the invention is such that a test to determine the effect of the invention (*not its commercial salability*) can only be made with publicity, and requires a considerable lapse of time, such, for instance, as the properties of a payment (*Elizabeth* v. *Pavement Co.*, 97 U. S. 126), when exposed to the action of the weather and of travel. But this is not such a case. The invention at most consisted in the mere mechanical modification of a jointed connection between the finger beam, and the arm for rocking the finger beam. The effect of this modification upon the operation of the machine could have been determined in a single day's use, if that use were made with reference to exposing it to the several contingencies to which such a machine is liable in use.

Certainly it did not require the construction of more than one machine to test it. If the purpose had been primarily that of *experiment upon the operation of this feature*, the inventor would not have manufactured more than one machine, or made a contract with Porter Brothers for its *general manufacture and sale.*

The swivel joint was old as the means of giving the crosswise movement, and this movement was old in finger beams. The effect of the modification was obvious at a glance.

When the contract was made with Porter Brothers, in February, 1863, to enter upon the manufacture and sale of these machines for the coming harvest (not one or two machines for experimental use), this marked the transition from the *mechanical experiment* that belongs to the work of the inventor, to the *commercial experiment* which belongs to the manufacturer and dealer.

Such a manufacture implied the making of permanent patterns and the investment of considerable capital. It marked the style of machine as fixed and determined, instead of resting in experiment.

It would have been consummate folly for Porter & Bro. and Graham to have built (as complainant's evidence concede they did), some ten or twelve machines during the spring of 1863 if the operativeness of this feature, or any other feature of the machine, was still a matter of experiment in any sense in which the term can properly be used as applying to the completion of an invention.

Certainly the various farmers to whom these machines were sold, and who used them in the regular course of business in cutting their grass or grain for that harvest, were not doing so as a part of the inventor's experiment.

Every purchaser of a new agricultural machine may be said in one sense to buy it as an experiment. Whether it is such a machine as he wants or not is a matter that he is to determine by trying it. But this is no part of the *work of invention* or of the *experiment that enters into the completion of an invention.*

The common method of disposing of machines of this character, adopted by the largest manufacturers, is to sell them with the agreement that they may be returned if not satisfactory to the purchaser; and if the statute is only to apply to cases where the manufacturer or dealer has satisfied himself fully as to the acceptibility of the article in the market and the purchasers have satisfied themselves that it is what they want, it would be practically a dead letter. It would only be extraordinary cases that would fall within it.

The two years that are allowed by the terms of the statute after putting the device on sale or into use, are apparently for the purpose of the commercial experiment, or, in other words, to give the inventor an opportunity to determine whether the device is worth patenting, not for the purpose of encouraging him in delay after the article has proved a commercial success. The statute in this respect is very indulgent. Under former statutes any public use or sale before application was fatal, and this is true in many countries to-day. There is nothing in the language of the statute, nothing in the policy of the law, that would countenance an interpretation that made the application of

the statute dependent upon whether the inventor himself was satisfied as to the acceptibility of his device or the profit with which it could be made and sold. With any such interpretation as this the purpose of the statute would be defeated, and the public, instead of being at liberty to manufacture and use the invention after the two years from the date of putting on sale had expired, would have to wait indefinitely for the inventor to satisfy himself as to what the public would think of the invention and as to whether it would prove a source of profit or otherwise, and then wait two years beyond the time he had so satisfied himself, and as much longer as might be required for his proceedings in the patent office.

If we are to accept also the theory of the complainant, and of the court below, as to the legality of filing an application claiming the device, and, after such application had been pending nearly two years, acquiescing in the rejection, taking out the patent containing, as it issues, a tacit disclaimer, and leaving in the records an express disclaimer, meanwhile filing a new application for the same invention, and, after another year, issuing the patent upon the second application, the time between the placing of the device upon the market and the actual issue of the patent, (which is theoretically to communicate the invention to the public), and the beginning of the term of the franchise, may be prolonged almost *ad infinitum*.

Graham, when asked by his attorney to state the history of the invention in controversy (p. 105, Q. 4) says that he made the model in December, 1862, or January, 1863, and during the month of February, 1863, made an arrangement with Porter & Bro. to "*embark in the enterprise of manufacturing reapers and mowers.*"

His witness, *Ward*, testifies that he worked for Porter & Bro. in 1863, and helped build some of these machines; that Porter & Bro. and Graham made as many as ten or twelve of these machines in 1863, which he supposes were built for sale for the harvest of 1863. The machines contained the construction here in controversy. He worked for Cleveland the next year in building the same

machines, and thinks they built twenty-five or more in 1864, which he supposes were built for sale. *Dep. Ward, p.* 99 A. 3–17.

Porter, also a witness for complainant, testifies to entering into an agreement with Graham in the winter of 1862 or '63 to build the reaper and mower of which Graham presented a model. He says (p. 101, A. 3):

"He presented a model for a reaper and mower, and we were to go on and build some together. I think Porter & Bro. were to furnish the capital, and Mr. Graham was to go on and superintend the building after the model he presented. We went on and built some machines, I think. We started a dozen, but don't remember certainly. I think we got four that went into the field. We quit working on that agreement that season about the middle of August—perhaps earlier or later."

He is asked by complainant:

"Q. 4. Did your operations of 1863, in reference to which you have testified, prove successful or not?

A. I think not very.

Q. 5. Did you have any thing to do personally in reference to those machines in 1863, or not?

A. I think I did not, to work on them; nothing, only I was interested in the machine."

The assumption seems to be that the effect of these sales depended upon whether the business enterprise proved successful.

He also states (Q. 8) that he fixes the dates and charges from his books against Graham:

"The book shows that he was at work some time along in February, 1863. . . . Here is one entry of February 10th, another of February 24th, another of March 7th, and others later; they are all along here. These entries are all in 1863; this is a book that was kept at that time; it is the day-book of Porter & Brother; the entries were made at that time. I think he had worked at the reapers some before we made any entries; that is my opinion about it. I don't find any thing in the book show-

ing what he was working at; I know he was working on those reapers and mowers, because he never worked for us at any thing else, I think. . . .

Q. 9. Why did your firm withdraw from the enterprise in the fall of 1863?

A. Because we couldn't see any money in it for us; we lost some money in it; I couldn't tell how much; it would be all guess-work."

Then p. 103:

"X-Q. 1. As I understand, you completed four of the Graham mowers that went into the field in 1863; is that right?

A. I think it is, but am not positive as to the number.

X-Q. 2. You mean by 'going into the field,' do you not, that they cut grass in the spring or summer of 1863?

A. Yes, sir; grass and grain.

X-Q. 3. Were these machines completed by you before the harvest of 1863, and put upon the market for sale?

A. They were, if they would work. They were on trial.

X-Q. 4. And you would have sold any one of those completed machines without any condition, if any person had offered you your price, would you not?

A. I think we would.

X-Q. 5. They were exhibited publicly, were they not, before the harvest of 1863?

A. They were.

X-Q. 6. Did you sell these four machines that went into the field in 1863 upon any terms or conditions?

A. They were put out, and if they worked to the farmer's satisfaction they were to keep them, and if not they were to come back, and they came back.

X-Q. 7. That is, the farmers kept them all summer, cut their grass, and completed their harvest with them, and then brought them back?

A. I do not remember how long they kept them. My memory is not clear, but I do not think any were sold that season."

It appears from their other witnesses that some were sold that season.

Porter testifies further:

"X-Q. 10. Have you any personal knowledge as to how these Graham machines operated in the harvest-field in 1863?

A. Yes. I saw them work in the grass at Mr. Dooley's, one of them, and one in the grain at Mr. Bull's, but it was about the first reaper I ever saw run, and I was no judge. To me, it looked as though they ran pretty good.

X-Q. 11. How much grass did the machine you saw cut?

A. Mr. Dooley had gone around a piece about an acre or two, and I followed him around; and also Mr. Bull in the grain.

X-Q. 12. And you saw nothing except satisfactory working of these machines in the grass and grain field?

A. I saw nothing else that I recollect of. I was there but a little while. I just drove up and followed them around.

X-Q. 13. And there was no dissatisfaction expressed as to the working of the machines?

A. Not that I recollect of."

* * *

Graham testifies in cross-examination (p. 121):

"X-Q. 35. How many mowers did you construct in 1863?

A. I think there were four of them completed; three of them taken out; one of them I took out into the town of Avon, and ran it for a short time—was fooling with it for perhaps an hour or two; two of the others went onto the farm of Ichabod Bull, and the other onto the farm of Mr. Dooley.

X-Q. 36. What did you do with the one which you ran?

A. I can't be positive as to when I got the machine back to town. I left it in the meadow belonging to Henry Hart. I can't tell how long it stayed there, but it was brought back to the shop some time during that summer.

X-Q. 37. At what time were these three mowers completed in 1863?

A. I think about the last of June or first of July I took the machine out, and I took it out as soon as it was completed.

X-Q. 38. Were the other two completed at that time?

A. I am not positive; but they were nearly so.

X-Q. 39. Did you have any other mowers, besides those three, in the process of completion?

A. We had; I think we begun ten or twelve, and had the castings cut for them.

X-Q. 40. Did you not set these ten or twelve machines up in 1863?

A. I think they were partially set up, but not completed.

X-Q. 41. You would have sold any one of those 1863 machines, if any person had offered you your price for them, wouldn't you?

A. It is a little difficult for me now to state what I would have done at this distance of time from then. I certainly never had the disposition to sell a dead horse if I knew it or thought it was so.

X-Q. 42. You built the machines to sell, in 1863, didn't you?

A. We built the machines to sell, if they proved successful; if not successful, we did not expect or intend to sell them."

Also p. 123:

"X-Q. 61. Did Mr. Cleveland, with whom you went into partnership in 1864, know these 1863 machines?

A. He did by sight; that is all. He knew nothing about them practically; he knew nothing about them at all until the winter of 1863 and 1864.

X-Q. 62. How many machines did you build with Cleveland in 1864 before harvest?

A. I think about a dozen. I am not positive as to the exact number.

X-Q. 63. These machines built by you and Cleveland were all built according to the plans, specifications, and drawings shown in your July 23d, 1867, patent, were they not?

A. Substantially so.

X-Q. 64. They were practical working machines, and did good work in the grass field in 1864, did they not?

A. I have stated, that in light grass they did tolerably well, while they staid together; but in heavy grass, not so.

X-Q. 65. How many of these mowers did you put out, which were run in the grass field of 1864?

A. There is one that I spoke of that was put on the farm of George Stearns, and the one that Mr. Ward took

out at Cleveland's solicitation, after having made some changes in it. These are all that I remember. The facts were, it was about an impossibility to get a farmer to take one of them out; they were considered by the farming community unworthy of an attempt. That was my experience with them at the time."

The machines here referred to were, in respect to features here in controversy, the same as that of the 1868 patent, and the verdict of the farmers then has been the verdict pronounced upon it by the trade ever since.

"X-Q. 69. Did you and Cleveland offer these machines publicly for sale?

A. I think we offered these machines in the same manner as we did those of the year before. This is the only way I ever offered any of them, I know."

This refers to the fact that these machines were guaranteed to give satisfaction, and to be returned if they did not—the usual method of selling mowers and reapers from that day to this.

Graham admits having sold Dooly a machine for the harvest of 1863 (dep. Graham, p. 121, A. 35), though it was only to be accepted if satisfactory. Porter also admits having sold one to Dooly in 1863 (p. 104, X-Q. 10, Rec.)

Dooly testifies (p. 320), in answer to a question as to how he became acquainted with Graham:

"A. Well, in this machine purchased of him about the date above. I don't think I knew him before that.

Q. 5. What kind of a machine was it that you bought of him; what was it to be used for?

A. Well, we called it a combined reaper and mower, for the cutting of grass or grain—one or both.

Q. 6. What year, or for what harvest, did you buy this machine of Graham, and how do you fix any date you may give?

A. The best of my belief is, that I bought it for the grass and grain of the season of 1863, but I wouldn't be positive.

Q. 7. How did you happen to buy this machine of Mr. Graham; what called your attention to the machine in 1863?

A. Well, they were manufactured then in Waukegan—what we called a home manufacture, and it appears to me that I came across Mr. Graham, and he told me that he had used one of them the year before for his own purpose, cutting grass.

Q. 8. What price did Mr. Graham ask you, and what price did you agree to pay him for this mower you bought of him for the harvest of 1863?

A. I think $125, to the best of my recollection, when perfect; this was to be paid on the satisfactory running of the machine—that is, understand, warranted to give satisfaction.

Q. 9. Did you pay that $125 or any part of it; and if so, when?

A. I paid either $75 or $80 for it that same fall. I couldn't be sure what time.

Q. 10. How much grass did you cut with that machine on your farm during the summer or harvest of 1863?

A. I must have cut in grass or grain 100 acres or over. I don't recollect exactly; the first year I bought it.

Q. 11. Did you have or use any other mower during the year 1863 for cutting your grass or grain?

A. No.

Q. 12. How did the machine run or work in 1863, as to satisfactorily or successfully cutting your grass or grain?

A. Well, we had to have a team on the road about all the time for repairs; when it kept together, it done well.

Q. 13. State whether or not there was any trouble or you experienced any difficulty in the working of the machine in the harvest of 1863, so far as the movement of the sickle-bar over the ground was concerned, and so far as the mechanism or connections of this finger-beam to the main frame was concerned?

A. The sickle-bar, I think, went very well, unless the sickle breaking. I don't recollect of any; unless breaks occurred, they run well.

Q. 14. What was the cause of any of the breakings of that 1863 machine?

A. One cause was the caster wheel was wrong; could get no beam to hold it, owning to the caster wheel not having the proper cast.

Q. 15. How long did you use that 1863 machine?

A. That one season—same season.

Q. 16. What machine did you use the next season, 1864?

A. One got up by the same men—claimed to be an improvement on the first—got up by Graham & Porter, the men that got up the first."

. . . . . .

"Q. 24. What machine was it you bought in 1864 other than Graham's?

A. Bought the Ball.

Q. 25. Did you use the Graham machine for cutting grass or grain in 1864 after you bought the Ball machine?

A. I think not."

. . . . . .

"Q. 27. How did the finger-beam work in the 1864 harvest of the Graham machine, as to passing freely over the surface of the ground?

A. I think about the same as the first; I didn't notice any difference."

. . . . . .

(p. 323):

"Q. 36. Did you keep the machines which you bought of Mr. Graham in 1863 and 1864, and have you got them in your possession now?

A. I kept them, but they are not together now.

Q. 37. When was it Mr. Graham and the other party was out to your farm looking at those old machines?

A. I should think the latter part of August or the fore part of September—I wouldn't be certain as to the time—1879?

Q. 38. Who was the other party with Mr. Graham?

A. This gentleman here (pointing to Mr. Banning).

Q. 39. Did Mr. Graham take away with him any part of this old machine when he was there in August or September last?

A. Yes."

Also in cross-examination (p. 324):

"X-Q. 10. How long did you use that first machine; I mean how many weeks?

A. I used it to cut my grass and grain that season;

we usually begin about the tenth of July, and get through about the first of September, perhaps; it depends some on the weather."

. . . . . .

"R-D. Q. 2 (p. 327). Was that machine which you bought of Graham in 1864 ever altered or changed any in its construction after you bought it?

A. I think not.

R-D. Q. 3. After the year 1864, did either you or any person in your employ use this machine which you had bought of Graham in 1864 for the purpose of cutting grass or grain upon your farm?

A. Yes.

R-D. Q. 4. Who used it, and give all the facts and circumstances concerning its use, after 1864?

A. A hired man I had; when we were out of hay to haul, we fixed this up again, got it all in good order, and sent two teams to use it occasionally.

R-D. Q. 5. During what year, did you use this machine which you got of Graham in 1864; for how many years did you thus use it occasionally after the year 1864?

A. I couldn't tell the years exactly, to 1866 or 1867 or 1868; somewhere along there; I think I could tell if I were at home."

Dooly is asked (p. 323):

"Q. 32. In 1863, did any of your neighbors or acquaintances buy any mowers or machines of Mr. Graham fort he harvest of that year like you bought? And if so, who?

A. Mr. Minskey, I guess.

Q. 33. Do you know of your own knowledge whether Mr. Minskey bought and used a machine like yours of Mr. Graham in 1863?

A. I know he used one; as to his buying, I know nothing about."

Minskey, who had been interviewed by Graham before he testified, indicated throughout his examination a disposition to adapt his testimony to the complainant's interest as far as possible. He says he bought of Porter & Bro. one of the Graham reapers and mowers, and "could not be positive about the year, but it was amongst

the first that they manufactured that I bought of them." (p. 329, A. 7.) He is asked:

"Q. 10. How much did you pay for this machine that you bought of Graham and Porter Brothers?

A. I am not positive, but to the best of my recollection, $125.

Q. 11. Did you pay them this $125 the same year you bought the machine?

A. That I do not know; if I didn't pay it that year, it was pretty quick after.

Q. 12. How many acres of grain or grass did you cut with that machine you bought of Graham and Porter Brothers the first year you bought it?

A. About twenty acres of grain and twenty or twenty-five of grass, more or less.

Q. 13. Was this all the grain and grass you had on your farm to cut that year?

A. Yes.

Q. 14. Please state how that machine did its work, and whether it was a perfect and satisfactorily working machine, the first year that you bought it, in grass or grain.

A. It did its work well. I can't say that it was perfection any more than I was.

Q. 15. Please state whether or not it worked successfully and satisfactorily to you in cutting your grass or grain the first year you used it.

A. I was satisfied with it."

. . . . . .

"Q. 19. About how much grass and grain did you cut with that machine in each year after you bought it of the Porter Brothers and Graham?

A. Well, for somewhere in the neighborhood of four years I cut the same quantity I have specified; after that I probably cut ten acres of grain more and forty acres of grass more. I bought another farm."

Complainant conceded that the Minskey machine was put into use as early as the harvest of 1864 (p. 333.) The only evidence to the effect that it was sold and went into use in the harvest of 1863, is the statement of Dooly that it was bought at the same harvest as his, and the statement of Minskey that it was one of the first machines of

Porter & Bros.; and there are one or two of the first four admitted to have been put into the field during the first year which would otherwise be unaccounted for.

Stearns testifies (p. 334) to having bought one of the Graham movers of Graham & Cleveland in 1864, and paid $160 for it. (A. 3–8.)

He cut about twenty acres of grass with it, and returned it because he did not consider the machine as a practical or successful machine. (p. 335, X-Q. 3.) He is asked (X-Q. 4):

"X-Q. 4. What became of that machine?
A. I took it back to Mr. Cleveland that same summer.
X-Q. 5. What did you take it back for?
A. Because I couldn't run it successfully."

Stearns is asked in re-direct examination (p. 336):

"R-D. Q. 2. What, if any thing, has Mr. Graham said to you in the line of preventing you from giving any testimony in this case and in regard to the character and working of that machine on you farm in 1864?
A. Well, he told me if McCormick sent any agent up there to kind of play off and say that the machine wasn't worth a damn.
R-D. Q. 3. When was that?
A. I think it was in the latter part of August, 1879."

Inevitably the machine was a failure in 1863 and 1864 and 1865, and continued a failure until it was finally abandoned by all who had to do with it; *but it was none the less on sale and in public use generally, for practical purposes, with a view to making profit out of it* in the *spring and summer of* 1863 and the *spring and summer of* 1864.

The contract with Porter & Bro. in February, 1863, and the manufacture of the ten or twelve machines that took place during the spring of that year, and the putting of four of these machines into the hands of farmers to be used by them for their ordinary work during the season, and to be kept by them and paid for if they found them satisfactory, was a business enterprise that marked the

transition from the experimental work of the inventor to the experiment that generally attends a commercial enterprise.

All this was not only more than two years before the application for the patent in controversy, but much more than two years before Graham filed his application for the patent of 1867, so that if the extraordinary contention in behalf of the complainant, by which he proposes to have the 1867 patent treated as relating to this invention far enough to preserve his rights and not far enough to have it issue without a claim for these features operate as a dedication to the public, were to be regarded with favor, it still can not save him from the effect of this public use and sale.

But it would seem that the complainant could derive no benefit from the 1867 patent. If it is treated as an application for a patent on this invention, the cancellation of the claim upon rejection and the acceptance of the patent without it must be treated as a dedication to the public.

See *James* v. *Campbell* (104 U. S. 356).
Miller v. *Brass Co.* (104 U. S. 350).
Sargent v. *Hall Safe and Lock Co.* (114 U. S. 63).

If it was not an application for this invention it certainly can not save the running of the two years, and the new contract with Cleveland in February, 1864, to manufacture some twenty-five machines under it, and the sales and uses that took place during that season have to be added to all that was done under the Porter contract, and counted as a part of the necessary experiment to determine the mechanical operation of one or two swivel joints.

Complainant has insisted that the two years before application referred to in the statute should be counted, not from the time when the application is filed in the Patent Office, but from the time when the application was put in the hands of the solicitor. Such a construction of the statute would be not only contrary to its terms but completely destructive of its purpose.

The oath to the application for the Graham 1867 patent

(not the patent here in controversy) bears date February 25, 1864. The application was not filed until December 4, 1865.

Graham testifies that he did not know that the application was not filed immediately after the papers were returned to Munn & Co. until after this suit was commenced. (p. 118, A. 24.)

But there are three documents in evidence, each of which contradicts this statement over Graham's own signature.

First, he entered into a formal contract with the Werdens, November 25, 1865, with reference to transferring to them the exclusive right in this invention. In the instrument drawn between them, and signed by Graham and the two Werdens, he recites that he

"has invented a combined reaping and mowing machine, known and called the Champion Machine, for which inr vention *application is about to be made* to the Patent Office at Washington, D. C., for letters patent." (p. 156.)

In making such contract the question whether the application had been filed, or was about to be filed, was one in which all the parties would be deeply interested, and to which their attention would be especially directed. Graham would not have recited that the application was *about to be filed* if, as a matter of fact, it had been filed.

Second, at the same date, another instrument was drawn to assign the two-thirds interest in this invention to the Werdens, so that the patent should issue to them jointly. This is a carefully prepared assignment for the purpose. This recites in slightly different language that Graham "has invented a new and improved grain and grass harvester for which he is *about to make* application for letters patent." (p. 158.) It is signed by Graham.

Third, while that application was pending Graham executed a power of attorney to E. S. Renwick, substituting him for the attorneys then in charge. This recited the application as *filed in the Patent Office December* 2, 1865, which is just two days earlier than it was actually filed, indicating

that he had in mind the date when it was sent to the Patent Office rather than the date of formal filing (p. 411).

This fairly illustrates how unreliable the testimony of a strongly interested party is on questions of this kind, and the demoralization that would follow if such testimony were to be accepted in place of the record dates in the office, or if the character of the public uses were to be determined rather by his testimony *as to the purpose* of his sales than by *the character of his transactions at the time*. His conduct, his contract with Porter, and the building and exhibiting and disposing of machines that followed during the spring and summer of 1863, are as inconsistent with his testimony that the invention was not in practical use and on sale, as is his testimony that he supposed this application was filed a year and a half before he drew these instruments is inconsistent with the instruments themselves.

If an applicant does not take interest enough in his application to ascertain whether it is filed within a year and a half after it is placed in the hands of the solicitor he has selected, or within the liberal length of two years which the law allows him, the consequences must fall upon him rather than the manufacturing industries stand still to await his convenience. Certainly if there were any reasonable excuse for this delay, the complainant could have furnished other evidence of it than his own statement. He showed no disposition to do so. (See p. 127 XQ. 88–93.)

In *Elizabeth* v. *Pavement Co.* (97 U. S. 126), this court, while conceding that, where the *nature of an invention was such that its character* could *only be* fairly *tested in public* and *by exposure* for a *considerable period*, such testing, *on the part of the inventor*, *under his own surveillance*, and not accompanied by any *sale or offer for sale*, or *any permission to others* to make or use the invention; or any step other than what was *primarily for the purpose of experiment*, did not work a forfeiture under the statute, stated in strong terms the exceptional conditions that warranted such a test. It said (p. 135):

"*So long as he does not voluntarily allow others to make it and use it*, and so long as it is *not on sale for general use*, he keeps the invention under his own control, and does not lose his title to a patent. Whilst the supposed machine is in such experimental use, the public may be incidentally deriving a benefit from it. If it be a grist mill or a carding machine, customers from the surrounding country may enjoy the use of it by having their grain made into flour, or their wool into rolls, and still it will not be in public use within the meaning of the law.

But if the inventor allows his machine to be used by other persons, generally, either with or without compensation, or if it is, with his consent, *put on sale for such use*, then it will be in public use and on sale, within the meaning of the law."

Again (p. 136):

"*Had the city of Boston, or other parties, used the invention, by laying down the pavement in other streets and places*, with Nicholson's consent and allowance, then, indeed, the invention itself would have been in public use, within the meaning of the law; but this was not the case, Nicholson did not sell it, nor allow others to use it or sell it. He did not let it go beyond his control. He did nothing that indicated any intent to do so. He kept it under his own eyes, and never for a moment abandoned the intent to obtain a patent for it."

Again (p. 137):

"Any attempt to use it for a profit, and not by way of experiment for a longer period than two years before the application, would deprive the inventor of his right to a patent."

Now, there can be no pretense that the Graham invention was one that could not be tested with a single machine, under the management of the inventor himself, and in a single day. Certainly it did not require more than one season to test the operation of his particular jointed connection between the finger beam and the frame.

But, if this were otherwise, he is still in conflict with almost every expression quoted from this opinion.

As early as February, 1863, he had made a contract *for the express purpose of putting it generally on sale and in public use*, and that contract was acted upon by *making machines for sale, putting them on sale*, and in *public use in the hands of strangers for their own purposes*, during that spring and summer, and the same continued during the succeeding year. It was carried on *as extensively* in both the season of 1863 and 1864 *as the character of the machine*, and the *capacity of those manufacturing and selling it* would permit. These machines were *not used under Graham's surveillance, for the purpose of experiments*, but were in use *by the farmers solely for the purpose of harvesting their grass and grain*. They had no concern with the development of the invention. It does not appear that either the farmers who owned them, or Graham, ever experimented with them with reference to ascertaining the effect of this movement. Every feature of the commercial enterprise is present; every feature that distinguishes the inventor's experiment is absent.

In *Egbert* v. *Lippmann* (104 U. S. 323) this court, in holding a patent invalid because the wife of the inventor had used a single article for her own purposes more than two years before the date of the invention (though it was there contended that this was experimental), said (p. 336):

"We observe, in the first place, that to constitute the public use of an invention it is not necessary that more than one of the patented articles should be publicly used. The use of a great number may tend to strengthen the proof, but one well-defined case of such use is just as effectual to annul the patent as many. *McClury* v. *Kingsland*, 1 How. 202; *Consolidated Fruit-Jar Co.* v. *Wright*, 94 U. S. 92; *Pitts* v. *Hall*, 2 Blatchf. 229. For instance, if the inventor of a mower, a printing press, or a railway car makes and sells only one of the articles invented by him, and allows the vendee to use it for two years without restriction or limitation, the use is just as public as if he had sold and allowed the use of a great number.

We remark, secondly, that whether the use of an invention is public or private does not necessarily depend upon the number of persons to whom its use is known. If an inventor, having made his device, gives or sells it to

another, to be used by the donee or vendee without limitation or restriction or injunction of secrecy, and it is so used, such use is public, even though the use and knowledge of the use may be confined to one person.

We say, thirdly, that some inventions are by their very character only capable of being used where they can not be seen or observed by the public eye. An invention may consist of a lever or spring, hidden in the running gear of a watch, or of a ratchet, shaft, or cog-wheel covered from view in the recesses of a machine for spinning or weaving. Nevertheless, if its inventor sells a machine of which his invention forms a part, and allows it to be used without restriction of any kind, the use is a public one. So, on the other hand, a use necessarily open to public view, if made in good faith solely to test the qualities of the invention, and for the purpose of experiment, is not a public use within the meaning of the statute. *Elizabeth* v. *Pavement Company*, 97 U. S. 126; *Shaw* v. *Cooper*, 7 Pet. 292."

In *Smith & Griggs Manufacturing Co.* v. *Sprague* (123 U. S. 249), the prior use was by the patentee in his own shop, and but a single machine, and some changes had been made in parts of the machine in which the mechanical combination in controversy was used.

This court distinguished between the case where the use is primarily for the purpose of experiment, and that there the experiment is incidental to the use for practical purposes. The court says (p. 257):

"A single sale to another of such a machine as that shown to have been in use by the complainant more than two years prior to the date of his application would certainly have defeated his right to a patent."

Again (p. 264):

"In considering the evidence as to the alleged prior use for more than two years of an invention, which, if established, will have the effect of invalidating the patent, and where the defense is met only by the allegation that the use was not a public use in the sense of the statute, because it was for the purpose of perfecting an incomplete invention by tests and experiments, the proof on the part of the patentee, the period covered by the use having been

clearly established, should be full, unequivocal and convincing."

The court's criticism of the proofs in that case, which follows, would apply with cumulative force to the present case, as would the conclusion (p. 266):

"The proof falls far short of establishing that the main purpose in view, in the use of the machine by the patentee, prior to his application, was to perfect its mechanism and improve its operation. On the contrary, it seems to us that it shows that the real purpose in the use was to conduct the business of the manufacture, the improvement and perfection of the machine being merely incidental and subsidiary."

The statute relating to two years public use was not an enactment in *derogation* of the rights of the *patentee*, but, on the contrary, in *derogation* of the *rights of the public*.

Prior to its enactment, the inventor could acquire no exclusive rights unless his application for patent was filed before the device had gone into public use or been exposed for sale at all. The patent law originally proceeded upon the theory that, if the public had obtained knowledge of the invention (other than by *surreptitious* means) it could not be deprived of the unqualified right to use it by any subsequent application. A patent could only protect an inventor in what it *revealed* to the public *before it had otherwise acquired possession*.

This statute is, therefore, not to be construed as if it took something from the inventor which before belonged to him. It conveys a privilege to him adverse to the public, and that privilege can not, by judicial interpretation, be extended beyond the plain terms of the statute.

SEVENTH.—RELINQUISHMENT TO PUBLIC UNDER PRIOR PATENT.

The Graham patent of July 23, 1867, *describing the device here in controversy as one of the inventions embraced therein, predicated upon a machine which would be inoperative without this device, and disclaiming as old the hinge on which the end-*

wise tilt took place, operated as a dedication to the public of whatever was described as a part of the invention to which such patent related and not claimed therein.

The fact that the record in that case showed the applicant to have claimed this combination, then, after rejection, erased his claim and taken a patent without it with no reservation as to any part of the machine described therein, operated as an estoppel upon any disturbance of the right of the public thereto through a subsequent patent which disclosed no new invention in respect to this part of the machine.

This is not a case where a patentee has substituted for a pending application another application for the same *subject matter* which *superseded* the first; nor is it a case where a pending application has been divided and separate patents contemporaneously issued for separate parts of the invention; nor is it a case where an applicant, having made independent inventions relating to the same machine, has filed one application for one part of the machine and another for another part of machine, *reserving*, by the terms of his application, or of the patent that issued thereon, inventions relating to other parts of the machine.

In the first of these classes there would be but one patent issued, but one term for what was exhibited therein, and nothing to mislead the public as to their rights in respect to what was not claimed therein.

In the second and third of these classes the right of the public in the invention *described as that upon which each of the patents issued*, would necessarily be dedicated to the public except so far as *claimed* in the particular patent in which it was described; and the patent itself, as well as the record in the office in connection with the application upon which it issued, would indicate what, if any, rights were asserted by the applicant in other parts of the machine.

In neither of these classes of cases would the public fail to acquire, at the end of the term of the first patent, the unqualified right to use whatever was exhibited therein and described *as the invention to which the patent related*. In neither would the public, after being informed by the lan-

guage of the patent itself, and the official record relating thereto, of the limitations of the claims based upon the subject-matter described in the patent, be liable to an appropriation of any part thereof by a subsequent patent to the same applicant, of which no notice was given by the issue of the first patent.

That the Graham patent of July 23, 1867, was substantially the same as that herein sued upon, in respect to the features here in controversy, is admitted by complainant's expert. (*Dep. Lotz, p.* 75, *A.* 3; *p.* 94, *A.* 109.)

That patent as it issued stated in its preamble that the invention consisted in:

"A new and improved grain and grass harvester, and I do hereby declare that the following is a full, clear, and exact description of the same."

The second object of the invention recited is:

"The free passage of the finger-bar over the ground, and the perfect moving of the former to adjust itself to the inequalities of the surface over which it may pass."

And the third is:

"The cutting in a proper manner of lodged grass or grain as well as the prevention of the choking or clogging of the sickle."

After a few lines of reference to the frame and gearing of the machine it proceeds to describe these purposes as secured by the precise combination now in controversy:

"I represents the finger-bar, the inner end of which is attached, by a joint, *h*, to a bar, J, which is at the rear of the main frame A, and is connected thereto, at its left-hand side, by a swivel or universal joint K, as shown in Figs. 2 and 3, said joint being composed of a rod *i*, which is allowed to turn in a bearing, *j*, attached to the main frame, and the end of the bar J being cylindrical and allowed to turn in the rod *i*, as indicated by the arrows.

Fig. 3, it will be seen, is a section of the joint, taken in the line *y,y*, Fig. 2, and this joint admits of the bar J

and finger-bar I, being raised vertically, and also admits of said bars being turned in a more or less inclined position in their transverse section, to admit of the fingers *k*, and sickle L, being turned more or less down toward the ground, as may be required.

This adjustment of the fingers *k* and sickle L, is effected through the medium of a lever, M, which is connected, by a rod, *l*, with an upright, *m*, on bar J. (Shown in Figs. 1 and 2)."

After devoting a large proportion of the specification to a description of the device here in controversy as an essential part of "the improved grain and grass harvester" therein patented, the specification ends as follows:

"I do not claim the connecting of the finger-bar I to a bar, J, by a joint, *h*, for that has been previously done."

Now the bar J is the vibratable link of the present patent; the swivel joint K is the swivel joint M of the present patent; the joint *h* is the joint between the vibratable link and the finger bar on which the tilting movement takes place. The swivel joint M in the draft rod is shown in the same position as in the present patent. Indeed, each element is located and operated severally and collectively in the same way, the dotted lines in the patent indicating the rocking movement through the arm mounted on the vibratable link just as it takes place in the patent sued upon. If this part of the "improved harvester" were eliminated from the machine there would be no operative machine left. A purchaser or licensee under the patent of July 23, 1867, would be unable to construct or use or sell a machine made in strict accordance with the description and drawing thereof without infringing the patent now sued upon.

The whole charge of infringement against these defendants rests upon the assumption that they have connected their finger bar so as to give it the same pivotal movement on the joint *h* as that patent showed and described as obtained by the same combination of elements

as are now claimed in the patent in suit. Certainly no one could read that patent without understanding that this was conceded to be old.

The practical disclaimer found in the record of that patent was still broader. A claim had been made upon just the elements involved in the claims now in suit, except that the joint M′ was not specifically recited, though it was shown in the patent as a part of the mechanism essentially involved in the movement to which that claim related, and the combination recited would have been inoperative if that element were not treated as included. The claim was rejected for want of novelty, and upon the last rejection it was stricken out and a request filed that in view of its withdrawal the patent might be issued for what had been allowed. (*See files, p.* 410–12, *Rec.*)

If the applicant had *divided* his application, that fact would have appeared in the files of the application, when it issued, and on the face of the patent, but where, as in this case, he filed an *independent application*, predicated in part upon features that had been invented since the date of the application for the first patent (features that are not involved in this controversy) there was no division of the pending application, and nothing introduced into its files to suggest that an effort was to be made to appropriate anything found in it, by an independent application. The second application being filed as an independent one was kept secret until the issue of the second patent. No examination of the records of the office could have revealed its existence.

One of the considerations which the public receives for the protection given the inventor under a patent is the unqualified right to use the invention described in such patent when the term of the patent expires. This object is defeated if the applicant can take out a subsequent patent for what is described in the first as the invention to which it relates.

It is the office of a patent to convey to the public the invention described therein. This object is defeated if an invention, which has been described in a former patent to

the same inventor, can be made the subject of a subsequent patent which discloses no distinct invention in respect to that subject-matter.

The purchaser of a patent, or of a license thereunder, presumably obtains a right to the entire machine described as the subject of invention therein; certainly so, unless there is an express reservation upon the face of the patent. If the patentee is at liberty, by a subsequent patent, to appropriate to himself what is shown and described in a former patent, this right is defeated.

The effect of such a practice would be to enable an applicant, who disclosed and described in his first patent a complicated machine, to continue from time to time to take out additional patents on different features of that machine, and if (as the court below holds) each independent application related back to the first which exhibited the feature, the practice could be continued indefinitely. A patent, when issued, would neither serve to inform the public as to the limitation of the claims made by the applicant upon the machine to which it related, nor to vest in the public any right to that machine after the expiration of the term of the patent.

Under such a practice there would be every inducement to the applicant to piece out his monopoly by a series of patents having terms that would lap over each other. No purchaser of a patent, or of a right thereunder, would have any assurance as to how soon that purchase would be rendered nugatory by a subsequent patent upon the same machine, and no inventor or improver or manufacturer would have any means of knowing what he was at liberty to utilize, either as the subject of further improvement, or for the purpose of manufacturing and introduction to the public.

The present case illustrates one of the absurdities that would follow. Before the first Graham application was filed, it, and all rights in the machine to which it related, was assigned to the two Werdens and Graham (not the complainant in this case, but the patentee) jointly, each holding a third interest. The theory of the complainant

is, that that application was an application for this invention. Certainly the transfer carried whatever was exhibited and described in that application. The patent issued to the Werdens and Graham jointly. It still belongs to them. The complainant in this case has no interest in it. But if this second patent is valid in respect to the first two claims, this complainant has, by a species of jugglery, appropriated what had been already assigned to the Werdens, or those claiming under them, who could not, during most of the term of their patent, use the machine described therein as the invention to which that patent relates.

Graham, the patentee, had, before the first application was filed, parted with two-thirds interest in the entire machine, and all rights to any invention therein contained. (See *Werden Contract*, *p.* 340.) The 1867 patent, having been issued to the Werdens and Graham jointly, the legal title became vested in them, and it has never been divested. It would be a fraud upon them, as well as upon the public at large, if Graham, by this application, could re-appropriate the subject-matter to which that patent related.

See *O'Reilly* v. *Morse*, 15 Howard, 62.

In *Odiorne* v. *The Amesbury Nail Factory*, 2 Mason, 28, the action was for infringement of a patent granted Jesse Reed, in 1814. One of the special pleas was (p. 29):

"That the discovery or invention contained or described in the patent stated in the said declaration, is contained or described in a certain patent issued to the said Jesse Reed, dated 16th of September, 1810, which is still unrepealed, and that a patent of the date last mentioned was granted to the said Jesse Reed, for the whole or part of the same invention or discovery patented by the patent stated in the said declaration."

It was not charged, nor was it a fact, that the first patent contained a *claim* for what was claimed in the second. The court, through Justice Story, in sustaining this plea, said (p. 30):

"It can not be, that a patentee can have in use at the same time two valid patents for the same invention; and if he can successively take out at different times new patents for the same invention, he may perpetuate his exclusive right during a century, whereas the patent act confines this right to fourteen years from the date of the first patent. If this proceeding could obtain countenance, it would completely destroy the whole consideration derived by the public for the grant of the patent, viz., the right to use the invention at the expiration of the term specified in the original grant. I hold it to be the necessary conclusion of law, that the inventor can have but a single valid patent for his invention; and that the first he obtains, while it remains unrepealed, is an estoppel to any future patent for the same invention, founded upon the general patent act. The public have, by the first patent, acquired an inchoate interest, which can not be defeated by any merely ministerial acts of the officers of the government."

In *Smith* v. *Ely*, 5 McLean, 76, Justice McLean, in passing upon a plea to the effect that the combination claimed in the patent in suit was "a material and substantial part of the thing patented by a former patent" to the same patentee, said (p. 88):

"An individual who has obtained a patent for a thing which he claimed to have invented, can not at any future time claim another patent for a substantial part of the same thing; and this is what the plea alleges Morse to have done, which is admitted by the demurrer. In such a case, there is no fraud in appropriating the invention of another, but it is in an attempt, it would seem, to extend beyond the limitation of the patent law the exclusive right. This act must be held void as against the policy of the law.

"If there be any error or defect in the specifications, it may be corrected by a surrender of the patent without prejudice to the rights of the patentee. If any improvement be made on the original invention, a patent may be obtained for the improvement. But a substantial part of the original invention can not be patented as an improvement."

In *James* v. *Campbell*, 104 U. S. 356, the patent sued on contained both process claims and combination claims

which would cover respective processes and combinations, some of which were exhibited in a prior patent granted to the same patentee less than a month before the application for the original of the patent in controversy, and others in a patent granted to the same patentee a little more than two years before the application for the patent in controversy. Neither of these prior patents had claims for the process or combination claimed in the patent sued upon.

After deciding that a patent could not reclaim by reissue what was exhibited but not claimed in the original patent, because it was thereby *dedicated to the public*, the court proceeds to discuss and decide the question whether he can, by an independent application not *simultaneous* with the first, secure either processes or mechanical combinations exhibited in the first, and held that the patent before it was invalid because this could not be lawfully done. In referring to the first patent issued to the same applicant which disclosed the invention, says (p. 379):

"As he did not then reserve the process of stamping letters with such an instrument, nor the combination of a postmarker and a blotter, and did not make any simultaneous application therefor, he could not afterward obtain a patent for such process and combination, but would be restricted to such particular combination or process as might be exhibited in a new device or apparatus."

And again, speaking of the second prior patent (p. 382):

"It is hardly necessary to remark, that the patentee could not include in a subsequent patent any invention embraced or described in a prior one granted to himself, any more than he could an invention embraced or described in a prior patent granted to a third person. Indeed, not so well; because he *might* get a patent for an invention before granted to a third person in this country, if he could show that he was the first and original inventor, and if he should have an interference declared."

"Now, a mere inspection of the patents referred to above will show that, after December, 1862, Norton could not lawfully claim to have a patent for the general process of stamping letters with a postmark and canceling stamp at the same time; nor for the general combination of a post-stamper and blotter in one instrument; nor for the combination of a post-stamper and blotter connected by a cross-bar; for all these things, in one or other specific form, were exhibited in these prior patents."

The objection with which the court is here dealing is quite independent of any question of two years' public use. The distinction which the court makes between the case of a patentee of the first patent and a stranger, when it says that the stranger might by an interference obtain a valid patent, excludes the idea that the effect of the prior patent depends upon public use. If there had been two years' public use the patent would be invalid under the statute, and it was unnecessary to consider the effect of these prior patents. It is as *in themselves* and *apart from any question of public use* sufficient to exclude a subsequent patent to the same inventor that the court is considering them.

If prior patents ever operate as an abandonment, they must so operate at the time they issue, and not after the right has been forfeited by some other reason.

The decision above cited in terms makes a *simultaneous* application, and a *reservation* in the patent that issues first, necessary to prevent that patent from operating as a dedication to the public of what is exhibited but not claimed.

In this and other cases this court has referred to a patent as operating to *dedicate to the public* what is described but not claimed therein.

In *Miller* v. *Brass Co.* (104 U. S. 350) this court said (p. 353):

"But it must be remembered that the claim of a specific device or combination, and an omission to claim other devices or combinations apparent on the face of the patent, are, in law, a dedication to the public of that which is not claimed. It is a declaration that that which is not claimed is either not the patentee's invention, or, if his, he dedicates it to the public."

This language would seem to apply with cumulative force where a claim had once been predicated on the part of the machine in controversy, and when rejected for want of novelty had been erased.

What has been dedicated to the public can not be recalled by a new application any more than by a reissue. Indeed there would be greater objection to recalling it by an independent application, since that would operate against those holding under the first grant, and would also tend to prolong indefinitely the franchise, and make the right of the public with reference to the same invention dependent upon different grants running for different terms and liable to be held by different parties.

See also *Mosler Safe Co.* v. *Mosler* (127 U. S. 354).

In *Godfrey* v. *Eames* (1 Wall. 317), and the class of cases of which this is an illustration, there was simply a second application substituted for the first and but one patent issued. The question was whether the substitution of the second application for the first forfeited the right, or was simply to be treated as an amendment. As one was withdrawn simultaneously with the filing of the other, it was held by a majority of the judges sitting (though by a minority of the court) that it was to be treated as one continuous application.

In *Suffex Co.* v. *Hayden* (3 Wall. 315), the patentee had filed an application for patent for a machine used in cleaning cotton. While that application was pending he made a supplemental invention and applied for a patent for what had been invented subsequent to the first application, and had not been described or shown in the first application. The second application issued in March, 1857, and the first application not until December, 1857, each for the particular invention for which it had been filed. The court, pointing out the fact that the two patents were for distinct inventions, and that the one which was attacked was *founded on the earliest application*, held that *it* was not forfeited by the issue of the later application before it. Then, speaking of the argument that had been urged that the

patent sued on was invalid because or a patent *subsequently issued* for the same improvement, the court said:

"This is obviously a misapprehension; the *last*, not the first, is void."

In *Sickles* v. *Falls Co.* (4 Blatch. 509), Justice Nelson, in passing upon a patent granted September 19, 1846, says:

"The improvement is substantially described and claimed in a patent granted to him on the 19th of October, 1844. This is a bar to a subsequent patent."

The court in this case obviously does not mean that the prior patent technically *claimed* the same improvement as the second, for the claims of the two patents are quite different. It can only refer to the fact that the description of the invention for which the patent was sought, contained in the earlier patent, corresponded in substance with what was claimed in the second.

There is no decision of this court, and no decision of any court prior to that in this case, which justifies the issue of a second patent under circumstances corresponding to those in this case. If the law is to receive an interpretation which would uphold such a proceding, diligent inventors, as well as the manufacturing interests, will be placed at the mercy of those who, either through indolence or through design, manipulate their applications in the patent office, so as to project them into the future, and spring them upon the public many years after the invention has gone into general public use, and after the patentee has, by a patent which describes without claiming it, given the strongest assnrance to the public that he had relinquished all claim to it.

EIGHTH.—NO DAMAGES SHOWN.

There was no established royalty or license fee, and no evidence showing actual damages of any kind. On the contrary, it affirmatively appeared that there were no damages.

The master and the court below altogether disregard

the essential conditions of an *established royalty or license fee*. They do not recognize *uniformity of practice* in dealing with the various parties to whom the patentee disposes of his franchise, or the *general concurrence* in a uniform rate of value among those who *voluntarily acquire* licenses under the patent and *act upon them*, as among the essential conditions which constitutes such an established license fee.

They assume that a complainant who never had any license fee, and never received any royalty in the ordinary course of business, may, after obtaining judgment against the defendant for a past infringement, proceed to establish a measure of recovery (or rather a factor to be multiplied indefinitely against that defendant), by procuring in *isolated* and *exceptional* cases, *contracts with strangers*, against whom *he has pending suits for infringement*, which *recite* that the settlement is made at a *uniform rate upon the particular machines for which that stranger is settling;* that it is immaterial whether that rate was *actually paid, even for the machines that were settled for;* that it is immaterial that it only required the party to pay that rate on a *fraction of the infringing machines for which he was settling;* that it is immaterial that such settlements were procured by giving to the company so settling (or *individually* to *the officers* of the company *who negotiated the settlement*) a separate consideration that would compensate for all that was actually paid ; that it is immaterial that the sum to be paid, or a considerable portion thereof, was *afterward released;* that it is immaterial that the instruments drawn in such transactions, in so far as they recited the granting of a license for the future, were not *acted upon*, and not *intended to be acted upon;* that it is immaterial that the transactions in which such rate of royalty is even recited as the basis of settlement are *less than one per cent* of the settlements made during the time, under conditions that were similar except in respect to the capacity of the defendants to protect themselves, or their interest in protecting themselves; that it is immaterial that the sums so paid were *never for machines made in accordance with the patent*, but always for *immunity* in the sale of ma-

chines of different construction that had *acquired their standing in the market*, and were *threatened with disturbance* under the Graham patent; that it is immaterial that the transactions relied upon were *collections made through attorneys*, generally *after suit commenced*, and never *dealings in the ordinary course of business;* and that a *measure of damages* thus *established* by one interested party through paper contracts made with strangers, *lite pendante*, may be applied as the *measure of actual damages* for an infringement which ~~had~~ ended before the first of these transactions was proposed, and which took place during a period when the complainant himself was not manufacturing or selling machines, and had no licensees that were doing so, notwithstanding it is conclusively shown that every effort to build or sell *in accordance with the patent was a disastrous financial failure.*

The master and the court below seem to understand the term *uniform* royalty, as used by the courts in this connection, to mean, not a royalty that is *uniform between the various parties with whom the patentee has dealt* in ordinary business transactions, but only *a rate of settlement* adopted in some exceptional instances in which the amount paid is *recited* as at a *uniform rate per machine* for the machines settled for by that party, and that a patentee may, by *wording* all his settlements or licenses where any considerable number of machines or any substantial manufacturers are to be dealt with, as made at lump sums (averaging a few cents a machine), *select the exceptional instances* (representing one or two per cent of his transactions) as furnishing the basis for his recovery against a defendant who has made many times the number of machines involved in all these settlements, while *excluding from consideration* all settlements that are made with manufacturers whose business or experience or interest would be even approximately that of the defendants.

The contention of the defendants is not, as the master seems to understand, that transactions at variable rates would constitute a measure of recovery against these defendants, but rather that, where the transactions of the

complainant have been at variable rates according to the capacity or interest of those with whom he was dealing to protect themselves, he *has no established royalty*, and must either *furnish some other measure of recovery* or recover only nominal damages; that, if the transactions of the complainant in his settlements with others are to be regarded, those which represent the bulk of his transactions are entitled to at least as much consideration as the exceptional few which have been *doctored* to meet the exigencies of this case; and that the greater weight would be due to those made with the larger dealers where the conditions lessened the comparative force of the cost of litigation as a disturbing or controlling element in the transactions, rather than to those which were made for sums so much less than the cost of litigation as to indicate this to be the controlling motive.

They insist also that the fact that all the transactions upon which the master relied were made *after a judgment that interpreted this patent broadly, and carried the implication that all who used a crosswise tilt in their finger beam were liable both to litigation and to injunction and damages;* and the fact that they related not to the Graham machine, but to *machines manufactured under other patents;* would deprive them of any force as evidence of damage or measure of recovery against strangers, for past infringement.

The master has said (p. 61):

> "*I do not find that any settlements made before the rights of the complainant were judicially established, or before the infringement of the defendant ceased, were at a rate less than three dollars a machine.*"

This statement seems intended to carry the implication that settlements had been made before the time mentioned, either at the rate of three dollars or some larger rate.

It is not only untrue in what it implies, but literally untrue in what it states. There was never prior to the time when the patent was adjudicated valid and infringed, or prior to the time when the infringement of these de-

fendants ceased, any settlement or payment of any kind, except one settlement for alleged past infringement; and that was with the Remington Co., at a rate that amounted to *about twenty cents* a machine.

The master assumes that the *burden is upon the defendant* to show the value of the invention. He says (p. 62):

"No evidence whatever has been introduced upon the part of the defendants tending to show the actual value of this invention."

He seems to be under the impression, not only that the burden is upon the defendant to show the aatual value, but that this value *becomes of itself a measure of recovery*, notwithstanding the disclaimer of profits and the express limitation of the recovery to "an established royalty."

He also says that he has "*entirely disregarded the question of compromise settlements*," and "*adopted the lowest sum fixed upon and paid for licenses* under the two claims in controvery,"

"although at least in some cases these licenses were at the rate of $5.00 for each machine, I have fixed upon the other sum as the more equitable."

This statement, like the one before referred to, is untrue as well in what it expressly affirms as in what it implies.

There is no instance (as the evidence hereafter cited shows) in which anybody *ever paid*, or *undertook to pay*, a royalty of $5.00 under this patent, and the very transactions to which he refers as showing a royalty, are *compromise settlements* at a rate never exceeding, if ever reaching, three dollars per machine. There is no case in which anybody has even pretended to pay more than $3.00 a machine on any machine, and no case in which this has been paid under this patent by itself, *upon all the machines* that were released by the payment. The statement of the master upon the same page, that

"in no case, either before the validity of the patent was

declared by the court, or since, have settlements been granted at a less sum than is here reported,"

is so glaringly contradictory to all the evidence before him, so diametrically opposed to the facts in evidence, that no explanation of it can be suggested.

The transactions under the patent, both before and since the decree, appear mainly from the complainant's evidence, and obviously with the most favorable version that he can give, but there is no occasion to look further than what he is forced to concede.

They may be distinguished into two classes:

1. Where the parties undertook, in the ordinary course of business, to manufacture the patented machine, and

2. Settlements with those who, after the judgment in favor of the complainant, were charged with infringement by reason of manufacturing other machines.

The first class are *uniform* in what they show, namely: that no person who ever undertook to manufacture complainant's machine under license from him, was able to dispose of the machine so manufactured, and, after a fair trial, they were invariably compelled to abandon the manufacture, as a failure, *no profit having been made, and not one cent of royalty ever having been paid* by anybody who manufactured the Graham machine, as licensee under the Graham patent.

The first manufacture was by Porter & Bro. They had the strongest inducements to push the machine. They had an exclusive right, and were only to pay a share of profits to Graham. Complainant concedes that no profits were made, and the business was abandoned after considerable capital had been invested. (*Dep. Porter p.* 101, *A.* 3–9; *Graham, p.* 107, *A.* 4.)

The second was by Graham and Cleveland. It carried an exclusive right, and considerable capital was invested in it. It was abandoned after one season as unprofitable, no profits having been realized. *Dep. Graham, p.* 107, *A.* 4; *p.* 124, *A.* 65; *Cleveland Contract, p.* 236).

Graham's account of these machines is as follows (p. 124, A. 65):

"The facts were it was about an impossibility to get a farmer to take one of them out, they were considered by the farming community unworthy of an attempt. That was my experience with them at the time."

This was the experience of every manufacturer who undertook to build the machine, until it was finally abandoned in 1869.

The third was the Werden contract, made November 25, 1865. It gave the Werdens the *exclusive right* to manufacture and sell the machine, with *a two-thirds interest in the patent and any future improvements* that might be made by Graham. They put their capital into the manufacture, having a larger interest than the patentee himself. Their experience was like that of their predecessors. The machine was unsalable, and, after trying it three seasons, they refused to build more, and, according to Graham's testimony, said that:

"They would not build the machine called for if they had to sell the machines on hand for old iron." (*Dep. Graham, p.* 138, A. 29; *Werden Contract, p.* 156.)

These three transactions represent all the Graham machines that were ever made, with, possibly, the exception of a few begun by the Bloomington Company about the same time, and immediately abandoned, as hereafter mentioned. Nothing but loss seems to have been the result, and the conviction of those who were strongly interested in pushing the business, that it was impracticable to sell the machine could not be more strongly expressed. These transactions were at a period when the business of making and selling machines of this character was far more profitable than it has been since 1873—more profitable than it has been in any other period in the history of the country.

Referring to the Graham machines that were made from 1863 to 1869 (that is, all the Graham machines that

were ever made), Graham is asked in cross-examination (*Dep. Graham, p.* 203):

"X-Q. 64. Did you make or lose in the manufacture of these machines while you were in the business?

A. I suppose money was lost on the small scale that was done.

X-Q. 65. How much money did you lose in building them?

A. I did not lose any thing but my time.

X-Q. 66. How much did the parties engaged in building them lose?

A. I could not answer that question; I don't know how much they had invested.

X-Q. 67. They kind of broke up?

A. Yes."

The fourth contract was the Bloom & Waterman, made in 1869. While no machines were built under it, it exhibits the methods of obtaining the so-called license contracts which have been pursued, and illustrates the danger of treating such contracts as having any weight apart from an established practice under them.

There was a firm of Bloom & Waterman, in which Bloom seems to have been the capitalist and Waterman the manipulator. Graham makes an arrangement with Waterman, by a separate instrument, that if he will induce the company of Bloom & Waterman to take a license under all the patents owned by him (three in number) at the rate of ten dollars royalty, subject to penalty if they do not manufacture, he will *pay over to Waterman one-fourth of the royalty so obtained, irrespective of the extent of interest that Waterman may have in the business of Bloom & Waterman and irrespective of whether he has any pecuniary interest whatever in it, and will relieve Waterman personally from any liability for any proportion of the prescribed penalty.*

Under these inducements, Waterman effects the license in behalf of Bloom & Waterman, subject to the penalty from which he is privately released. No machines are ever manufactured under it, and Bloom ultimately pays the penalty prescribed in the contract rather than undertake the manufacture. (*See Waterman license, p.* 239, *Dep.* 193, *X-Q.* 116–119.)

The patentee claims in 1870, to have effected an oral license under the same three patents to a Bloomington company, but they *abandoned the manufacture, and never paid one cent of royalty.* (*Dep. Graham, p.* 180, *A.* 18 *and* 19).

Several years intervened after this before these defendants commenced to manufacture, under patents of their own, the form of their own machine, by reason of which they are now charged with infringement, the salability of which they insist is due to the absence, rather than the presence of the Graham peculiarity of construction.

The material point on which there was entire uniformity and concurrence on the part of every man in the trade who ever tested it, not excepting the patentee himself, was that the invention, as exhibited in the patent, was of no practical value.

If the verdict expressed by this uniform usage of those dealing with the franchise is to be considered, this is where we find it, and it could not well be more conclusive.

From the date of the issue of the patent to the date of the decision in this cause, which was subsequent to the termination of the infringement here under consideration, a period of more than twelve years, not one dollar of royalty had ever been paid under the patent.

The only income of any kind which it is claimed was derived from it, prior to the commencement of this suit, was one *settlement* made with the Remington Company, in 1873, for an alleged past infringement, consisting in the manufacture of about 2,700 machines, which were settled for by the payment of $500.00—less than twenty cents per machine, and considerably less than the cost of litigation—and the *penalty* which was paid by Bloom *in preference to manufacturing the machine under the license into which he had been entrapped, as heretofore stated.* (*See Dep. Graham, X-Q.* 185–195, *p.* 198; *Dep. Ross, p.* 439–440, *Rec.*)

The only income of any kind derived under the patent, from the time this suit was begun, until after the decision awarding the interlocutory decree, was $2,650; obtained in *settlement of a judgment* for infringement against Gammon and Deering. This included, *first*, all

costs in the suit; *second*, 1,392 machines sold by Gammon and Deering; *third*, a release of the Sprague Company, who had manufactured these and other machines, from all claims against them up to date, and *fourth*, a release for the Sprague Company, and Gammon and Deering, under all other patents owned by either Hugh Graham or A. B. Graham, relating to harvesters or mowers. (*Dep. Graham, A.* 56, *p.* 187; *X-Q.* 193–200, *p.* 198; *Dep. Cook, p.* 444–445, *and Exh. p.* 454, *Rec.*)

Complainant undertakes to explain this by saying the Sprague Company were insolvent; but he had his decree against Gammon and Deering for these machines; they were abundantly solvent, and had in their hands over six thousand dollars belonging to the Sprague Company, which they were holding to abide the result of this suit. Their insolvency would not explain the release under other patents, or the including of strangers to the suit.

A contract with the Wayne Agricultural Co. was effected during the pendency of this case, and was the only other contract for license prior to the interlocutory decree. The policy pursued in effecting the Bloom & Waterman contract was imitated in this.

Morse, who was dealing in mowing machines in Chicago, and a personal acquaintance of the president of the Wayne Agricultural Company, occupying an office in common with that company, *was offered by Graham twenty-five per cent of the royalty* that should accrue, if he would *induce the Wayne Company* to take a license under the Graham patent. It was not to build the Graham machine, but to build the Sprague machine under the Graham patent. In November, 1878, Morse succeeded, with the help of Graham, in effecting an exclusive license under *two* Graham patents (one of April 7, 1868, not shown in this record), at a royalty of three dollars a machine, the *Grahams covenanting to defend the licensee, at their own expense, from all piracy and infringement in their exclusive territory*, which included all states of Ohio, Indiana, Illinois, Missouri, Iowa, Kansas, Arkanses, Texas, Kentucky and Tennessee, with the right to sell in all other states. They also

covenanted to make their claim good against all who might contest and litigate their rights under their patent. This company, like all who had undertaken to manufacture under the Graham patent before, seem to have found that they *could not afford to manufacture at that royalty. They never made a machine under it*, and the license was revoked. *Dep. Graham, A.* 38, *p.* 183; *X-Q.* 65–68, *p.* 189; *X-Q.* 86–89, *p.* 191; *Wayne Co. license, p.* 255; *Dep. Morse, A.* 4, *p.* 217; *A.* 15, *p.* 219, *Rec.*)

This contract certainly can not contribute to establish a license fee; *first*, because it was never acted upon, but abandoned; *second*, because it was an exclusive right, which is something quite different from a mere license under a patent; *third*, because it was subsequent to this infringement, and while this suit was proceeding; *fourth*, because it included not only the two claims of this patent, but all of this patent and an additional patent; *fifth*, because it included an undertaking on the part of the grantors to protect and defend the grantees, at their own expense, in the exclusive enjoyment of the franchise.

A guaranty of this kind, which places upon the grantor the expense of litigation, and of whatever is necessary to protect the grantee in indisputed enjoyment of the right, conveys an affirmative protection vastly different in character and value from a mere license.

The only significance of this contract, is as showing the method of procuring such contracts and the invariable verdict of those who had every inducement to manufacture under the Graham patents, that the manufacture could not be carried on upon any terms.

Complainant's dealings under his patents since the decision in this cause, has been of a character similar to that heretofore referred to, but bears most conspicuously the indications of having been regulated more with the purpose of obtaining some convenient evidence to be used against these defendants, than with reference to the particular issue between him and the parties with whom he was dealing.

Every transaction is affirmatively shown to have been with

alleged infringers against whom suit was then pending, with two exceptions, trivial in character, one of which was an *unlimited license* for the term of the patent, *without royalty*, for five hundred dollars, and the other included another patent, and related to the manufacture of a machine charged to be an infringement.

Every settlement was made after the judgments sustaining the patent with a broad construction put it in the power of the complainant to enjoin machines already manufactured, and to break up the entire business of the manufacturer for the season, and after it became apparent from the decision of this court that it would be necessary to carry the controversy under the patent to the Supreme Court before the defendants could be heard upon the question of validity and infringement, so that complainant had a powerful lever to use in forcing settlements.

Every so-called license, and every settlement, on which the master rests his finding of an established royalty, was effected through the counsel then prosecuting this suit, and every cent paid was collected through such counsel.

The only entries of the money so collected are stated by Graham to be contained in the books kept by his attorneys, and their production is withheld because the books in which they appear are "private accounts with all or many of our clients." (*Dep. Graham*, *p.* 191, *X-Q.* 92–100; *p.* 195, *X-Q.* 144–146, *X-Q.* 153; *p.* 102, *X-Q.* 251–252, *Rec.*)

Surely, collections effected through attorneys, at the point of the bayonet, can not, by any form of instrument which they may draw, be converted into a measure of recovery against a stranger. There is here no element of a market price established in the ordinary course of business.

Each transaction is referred to successively.

The Geneva Lake case is one in which complainant claims to have shown an established royalty. He produces a license which, upon its face, purports to grant to the Geneva Lake Company the right to manufacture under his patent at a royalty of five dollars a machine, but provides that a discount of forty per cent. shall be made for payment; and claims that this company acted under this license.

It is shown on the other hand that this license was executed *after a decree in favor of complainant* against that company, and while a reference to the master was pending. That reference proceeded, notwithstanding this settlement, to a judgment for $4,902.29, *which was almost immediately released* upon the payment of slightly more than half that amount. *There was also executed to both the company and its president, at the same time with this release, a grant severally to the company and to its president, of the right to manufacture and sell under complainant's patent for the full term of it, without royalty. The license to each party was made separately assignable, and gave to each separately, or to any one whom they might choose to transfer the license to, the unlimited right to manufacture for the full term of the patent in any part of the country, without royalty or restriction of any kind.*

This not only wiped out the nominal license at a stipulated rate of royalty, but it paid the parties very handsomely for their services in carrying through the arrangements by which this nominal license to be used against others was procured. (*See Dep. Nethercut, A.* 4–28, *p.* 422–424, *Ex. A. p.* 452, *Rec.*)

The Remington Settlement was effected about the same time (June 1881). This also was a settlement of a suit for infringement then pending. There was executed an instrument purporting to recite the settlement at the rate of five dollars a machine, with a discount of forty per cent., and a license for the future at the same rate.

When we come to investigate this transaction we find that it was a part of the arrangement that while five dollars a machine, with a discount of forty per cent., should be recited as the consideration, *this was to be paid only on* 1,350 *machines, while about* 900 *additional machines made by the company were released without any payment whatever.* These nine hundred machines were of a kind that had already been adjudicated an infringement.

We find also *that the license for the future was a mere nominal matter;* that the *defendants did not intend to continue to manufacture and never did manufacture further,* except to finish up sixty-two machines that were partly completed at

the time. The contract made at the time shows that Graham knew that he was releasing other machines than those which purported to pay royalty. (*Remington License, p.* 249; *Dep. Ross, p.* 439–443, *Rec*).

As the three dollars a machine, on the 1,350, was paid down at the time, the recital of five dollars a machine, with a discount of forty per cent. could have no purpose, except for use against strangers.

Graham undertakes to explain the exclusion of the nine hundred machines by saying that he expected to recover for them against the dealer, which was the Geneva Lake Co. If this was so, it would still show that the release from them to the manufacturer, who was primarily liable, was a material consideration in the settlement, and that the making of this settlement at a nominal rate of so many dollars a machine for a portion of the machines, was solely for the purpose of use elsewhere; but the fact that Graham is at the same time explaining his *release* of the Geneva Lake Co., by saying that he *knew it to be insolvent*, makes this excuse, in respect to the Remington Co., extremely transparent.

The Wayne Agricultural Co. transaction in January, 1882, was also the settlement of a suit for infringement already brought. They had been manufacturing the same machine that had been adjudged an infringement in the Geneva Lake suit. The settlement included a release of these machines under both the Graham and the Burdett and the Leroy patents, and a license to continue to manufacture for the full term of the patent. The amount paid for past infringement was $1,450, and purported to be estimated at the rate of three dollars a machine. The unlimited right to manufacture for the future was paid for at the rate of $1,500 a year. The evidence shows the manufacture to have been over 1,000 machines a year, which would make the rate paid for the future at less than $1.50 per machine. (*See Dep. Lawrence, A.* 12–31, *p.* 414–416; *Exhibits* 449–451, *Rec.*)

The Johnston Harvester Company settlement was made in April, 1882, and complainant was in a position to enjoin

their entire output for that year. Suit for infringement was pending. It included a *complete release for the past* and an unlimited license *without royalty* for the full remaining term of the patent. Ten thousand dollars were paid. This is shown to have included over 14,000 machines, and would amount to about seventy cents a machine. (*See Dep. Dewey, pp.* 427–430. *Dep. Johnston, pp.* 430–433, *Rec*).

The Warrior Company settlement was effected in August, 1881. This was a suit for infringement then pending against this company. This included a release for the past and an unlimited license, without royalty, for the entire term of the patent, for the company, or any successors of it. The amount paid was $12,000. The company had then made over 10,000 machines, and was manufacturing at the rate of between two and three thousand a year. Up to and including the season of 1883 it had made 16,629 machines, and at its rate of manufacture would have made upward of 19,000 before the expiration of the patent. The rate per machine would therefore amount to about sixty cents. (*See Dep. Elliott, p.* 444, *Rec*).

The Janesville Machine Co. transaction was an *unlimited* license, *without royalty*, granted to the Janesville Machine Co., January 13, 1882, the entire consideration being five hundred dollars. The instrument which conveys this right purports to grant Graham, as a further consideration, a shop-right under the Glass patent; but this shop-right is a personal one, a provision being expressly made that it should not be assignable, "nor shall other parties be associated with the licensees in exercising the privileges thereof." Graham was not a manufacturer, and could not possibly use this shop-right. The patent under which it purported to be granted was one issued in 1867, and had but little time to run. Such a shop-right was entirely unavailable for any purpose, It is not pretended that Graham contemplated manufacturing. The recital of this consideration is clearly, like the recital of every other instrument, rather for the purpose of use outside. (*See Glass Agreement, p.* 253, *Rec.*)

The Ann Arbor license is the only remaining transac-

tion that appears in evidence. It was granted in September, 1880 (after the decision in this cause), and purports to be for five dollars' license fee, with forty per cent. reduction for payment. It not only licensees the manufacture under this patent, but covenants to protect the license in the right to make the particular machines which it is about to manufacture (which were not Graham machines). It is, in other words, a license under the later Sherwood patent, as well as under the Graham patent, and Graham enters into a bond to protect and hold harmless the licensee against any and all claims under this subsequent Sherwood patent. It was also expressly agreed that the licensee should have the right to terminate the agreement at any time. For all that appears, this protection, under the Sherwood patent, may have been the sole consideration on the part of the licensee in entering upon this contract. The introduction of a covenant to protect and hold harmless the licensees in the manufacture of the machines they propose to make, against a *subsequent* patent to a stranger, is so extraordinary as to imply that it was the real inducement offered the licensee for taking a license which Graham wanted for use against others. The covenant is not to protect them in the manufacture of the Graham machine, or in the features covered by the Graham patent, for they were not making the Graham machine or using the feature in controversy, as shown in the Graham patent, but in a distinct machine which the company had exhibited to Graham, and which they apparently understood was liable under the subsequent patant.

It is very significant that in his transactions under this patent, some other consideration has, as a rule, to be introduced as a make-weight to procure the taking of the nominal license, and in every instance the make-weight seems to be the substantial consideration. It is simply fixing for sheep which are worth five dollars apiece, a value of two hundred dollars apiece, by in some instance selling one sheep for that price and throwing in a horse.

Under this Ann Arbor license but two hundred and twenty machines have been made. (*Dep. Graham, X-Q.* 218–219, *p.* 200, *Rec.*)

If this Ann Arbor license had been under the Graham patent alone (as it clearly was not), it could still afford no measure of recovery in this case. It was for immunity in the manufacture of an expensive machine, which the company had before built, and in which its good will in the market was invested. It was made through complainant's counsel after the infringement here in controversy had ended and the cause had been decided. Its recital of five dollars with a discount of 40 per cent. shows clearly that it was framed for ulterior use. It relates to less than one-half of one per cent. of the transactions under the patent. To treat it as establishing a uniform rate of royalty would be the height of absurdity. It is a transaction entered into with one party only, and therefore can express no general concurrence in the rate of royalty prescribed. It does not appear that the party entering into it had any familiarity with the trade, any means of judging the value of the invention, or any correct understanding as to the scope and limitations of the patent, or any other qualifications for expressing an opinion as to what would be a fair rate of royalty. It can not appear what ulterior considerations other than those recited in the instrument were brought to bear. The methods of procuring contracts practiced by Graham have been illustrated by the Bloom & Waterman, the Geneva Lake Co., the Wayne Agricultural Co., and the Remington inventions. The Ann Arbor deal was made under the pressure of a sweeping decision that treated Graham as the author of the crosswise tilting movement of the finger-beam rather than of the specific modification to which the art confined him. It had no relation to the time of this infringement, and is incapable of furnishing any evidence as to what the complainant would have realized during that period but for the infringement. Instead of representing a *uniform usage* under the patent, it represents a *solitary exception*, and one almost infinitesimal in the business to which it relates.

But if all these objections were removed the fact that the contract is an undertaking upon the part of complainant under bond to protect the licensee against a subsequent patent, in the manufacture of a machine which it does not

appear had any resemblance whatever to the Graham machine, deprives this instrument of all significance as a measure of value, except as it affirmatively shows that the Graham invention was treated as not by itself worth three dollars a machine.

This completes the series of transactions upon which the *master found the established royalty at a uniform rate.* We find as a result:

First, that in no instance has anybody paid a royalty of any definite amount for the use of the Graham invention.

Second, that everybody who undertook to manufacture the Graham machine, whether as owners or licensees under the patent, immediately abandoned it as unprofitable.

Third, that neither the patentee nor the complainant had, up to the time of the decision of this cause, been in receipt of one cent in the way of either royalty or license fees, or of profits from the manufacture of the invention.

Fourth, that in the transactions subsequent to the termination of the defendant's infringement, less than one per cent. have purported to be made upon the basis of royalty; that in every instance where this has purported to be the basis there has been some ulterior consideration adequate to account for the entire amount paid; while the payment has never been for the use of the *Graham* construction, but always for *immunity* in selling machines built under other patents.

Fifth, that every transaction has been upon a basis that would be more economical to the defendants than a contest.

Sixth, that the only transaction in which any licensee has paid any sum of money for any right under the Graham patent, by itself alone and uncoupled with a release from pending litigation, is that of the Janesville Manufacturing Co. (otherwise spoken of as the "Glass License") in which a license for the full term of the patent, without any royalty whatever, was granted for $500, the object being to protect the grantee against disturbance in manufacturing a machine charged to infringe.

Seventh, that the transactions which have purported to be upon the basis of a royalty have in every instance been framed in behalf of complainant for the purpose of affecting pending litigation, and secured by ulterior considerations apart from any value attached to this patent.

It would be a harsh rule which put it in the power of some inexperienced, ill-informed, adversely interested or unduly influenced manufacturer, by a transaction relating to a few machines, procnred by a patentee while a suit was pending, to arbitrarily fix the rate per machine, which should be rigorously applied as an invariable multiplier to to the past infringement of the larger manufacturers who had never acquiesced in the transaction, and against whom it should be invoked to support a judgment many hundred times larger than the amount of that involved in the transaction with the stranger.

Conceding that settlements for the past afford no measure of recovery, it follows, not that complainant is entitled to recover what he claims, without showing any definite measure of damages, but that unless he shows some definite measure of actual damage he can have no recovery at all. If his ordinary transactions, under his patent, have been settlements or licenses at variable rates, and if such settlements and licenses are not a measure of recovery, it follows, not that he can pick out of these transactions some one which has been specially favorable to him, and assert it as a measure of recovery, but that there has been no such concurrence in any uniform rate of value for the franchise, as will establish a measure of recovery against a stranger, and that recourse must be had to some other basis of recovery.

Consider, now, the invention itself as embraced in the infringing claims and as construed by the court, and the extravagance of the measure of recovery adopted by the master becomes more striking; for the royalty adopted by him is one which would be liberal if this patent *covered the entire machine*, instead of a mechanical modification in one adjustment (in itself old) at one joint of the machine. When we look at the complicated machinery which goes

to make up a mower, the construction of the joint between the finger-bar and the main frame seems to involve but limited ingenuity compared with the operative mechanism of the machine. Graham but slightly modified this joint. His invention related to but one of its several adjustments. The floating finger beam was confessedly old. The means of adjusting it in different vertical planes were old in connection with the floating beam. It was old, in the same connection, to give it the adjustments which are the object of the Graham invention. The McCormick company was paying license by the Saxton contract alone, under a large number of patents earlier than the Graham, covering broadly the various adjustments of the finger bar, including that which Graham simply modified, as well as many other ingenious and valuable features of the machine. The license fee for this entire collection of patents was two dollars and fifty cents per machine. This is a much more accurate and reliable measure of the rate per patent commonly accorded in *bona fide* business transactions, where there are no ulterior considerations, than are any of the transactions of Graham in evidence here, and apportioned between the patents the average rate, would give Graham but a few cents a machine.

But there is no evidence upon which a royalty of even a few cents a machine can be awarded to Graham.

If Graham's mode of constructing the joint possessed any advantage over other modes before in use, it would have been a very simple thing to show what that advantage was, and the extent of its value. Complainants have carefully avoided entering upon any question of that kind. It is obvious that this joint, constructed just as Graham constructed it, would be inferior in value to the Zug and Ball, or other earlier machines. Those machines gave in each adjustment of the finger beam, a certain automatic capacity, which enabled it to rise freely to pass over any knoll or other obstacle that the guards would be driven into if it was destitute of this automatic play. Graham's construction allowed no such automatic play, and, therefore, was liable at any moment, if the attention of the driver was di-

verted, to run the fingers into a knoll, or mound, or anything else that was raised above the level over which the finger bar was moving. In this respect it was a decided retrogression from the better machines in the market before the date of the patent, and this accounts for the fact that the Graham machine never went into use and was speedily abandoned as unprofitable. The defendants, in their machine, have avoided the fatal defect of the Graham device, and preserved the automatic play, which was found in the older machines but excluded from the Graham construction. They have a patent for their particular construction by which they obtain these advantages, and were operating under this patent during the term of the infringement. Their contention has been throughout, among other things, that their device was a modification of the older patents under which they were licensed, rather than an imitation of Graham, and in this opinion they were acting honestly and consistently.

The court having narrowed the patent down to the mechanical construction of this single joint, in order to avoid prior patents and to save the patent from being declared invalid, the master, disregarding its limitations, has proceeded as if the patent covered the entire machine made by the defendants, and awarded a royalty that would be a large one for them to pay upon that hypothesis.

If the value of the invention were to be looked at at all, the question was not, what was the value of the right to make the machine as a whole, or even the value of this particular adjustment taken by itself, but only, what value did the Graham construction, by which the adjustment was effected, possess over former constructions. If the master had looked at this question he would have been compelled to answer that it had no appreciable value. This has been the answer of the trade, and it is an answer obvious upon inspection of the device itself.

The master has expressed his opinion as to the value of the invention. Upon what does this opinion rest? Certainly he was not entitled to guess at its value. He was not entitled to speculate about it. He could only find its

value, if the value were to be considered in this connection at all, upon definite and competent evidence that showed with reasonable certainty the *commercial value* of this particular construction, as compared with others which the defendant had the right to use. He has not considered that question at all. He had nothing before him upon which, if he had considered the question, he could have found any thing except nominal damages. But the *value* of the invention, as *an independant measure* of recovery, was eliminated by the *disclaimer of profits* and the limitations of the recovery asked to *an established license fee.*

When the master reported that complainant had an established royalty at the rate of $5.00 per machine he stated what there is not one scintilla of evidence to support. Whether he had an established royalty, or not, was a question of law as well as of fact, and the finding upon this point must be scrutinized as such. But if it were simply a finding of fact it is not only against evidence but without any evidence tending to support it.

An agreement to pay $5.00 a machine royalty with forty per cent. off, is not, either in law or equity, an agreement to pay any thing but $3.00 royalty. The master's report is conspicuously misleading in that he states that there was an established royalty at $5.00, when there was no case in which it even appeared upon the face of the instrument that any body undertook to pay more than $3.00. It studiously withholds the still more significant facts that in no instance was $3.00 a machine paid for the right to manufacture under this patent apart from other considerations; that every transaction that purported to be upon such a royalty was secured by ulterior inducements; that they were all settlements for past infringement at less than the cost of contest; that they only required a stipulated number of machines to be paid for and *released the rest;* that these settlements instead of representing a substantially uniform rate during the period wifhin which they were made, represent only rare exceptions—less than one per cent. (in number of machines), of those settled for and licensed under similar conditions, except as to the interest

or ability of the infringers to resist; and that every transaction which, even upon its face, purports to secure the royalty referred to by him was subsequent to the termination of the infringement of defendants.

The finding of value is altogether gratuitous. The question was not before the master, nor was there one particle of evidence upon which he could calculate this or any affirmative value for the invention, other than these same dealings *lite pendente*, in no one of which was that value placed upon it or recognized as applying to it. This reference to the value of the machine is obviously merely a mode of fortifying his report. It is a reiteration, under a different form of expression, of the master's opinion that these variable and cunningly manipulated dealings afford a measure of damages against these defendants. It can have no significance unless it is conceded that the master is at liberty, in the absence of evidence, out of his own arbitrary discretion, to decree to complainant any rate of recovery that may be agreeable to him.

If the master is at liberty thus arbitrarily to mulct these defendants, under the color of exceptional contracts arranged by the complainant pending the litigation, having no significance as to actual measure of damages suffered by the complainant; if, instead of determining these questions by definite *data*, proved in the ordinary way by witnesses placed upon the stand, subjected to cross-examination, obliged to exhibit their qualifications, the *data* upon which they express their opinions, and the inducements which have been brought to bear upon them, and exposed to the test of rebutting evidence, complainant is at liberty, after the issue is joined with the defendant, to procure by any and every inducement that can be brought to bear, *ex parte* documents which do not even purport to express the judgment of the parties to them as to the value of the thing in controversy, and make them the sole measure of damages; if any petty transaction secured to the interested party by ulterior considerations, the nature and extent of which we can never fully know, is to be dragged in as furnishing an arbitrary factor by which the infringement of the defend-

ants is to be multiplied; such a proceeding certainly ought not to be dignified by the name of a judicial determination of the rights of parties. It has no element of the judicial administration of justice. The adoption of such a rule is the denial of all justice to the defendants. It places every enterprising manufacturer completely at the mercy of the roving ne'er-do-weels and the speculators in patents, who never contribute any thing to the practical advancement of the arts upon which they prey. It withdraws the question of actual damages from the jurisdiction of the court, and transfers it to one of the interested parties, whom it at the same time makes the procurer of the *data* by which past trespasses are to be measured. It substitutes for *inter partes* proceedings in a court of justice, with the safeguards which the law has thrown around such proceedings, an *ex parte* proceeding in the office of complainant's solicitors, by which the defendant is concluded without hearing and without remedy. It reduces the office of the court, from that of judicially determining the relative rights of parties according to the rules of evidence and of law, to merely recording the decrees that are manufactured elsewhere by one of the interested parties, or his solicitors, while the cause is pending.

Nothing could more tend to create a distrust of the administration of justice than the assurance that the decrees of courts were to be procured by such manipulations, or affected by such considerations, as those upon which the master has returned his report. If that report is to be followed, it means that the office of solicitor for complainant in a suit of this kind is not merely to present the law and the facts of the cause, but is primarily to engineer the procurement of fictitious transactions by which the measure of recovery for the past is to be created; that the damages inflicted upon a complainant by infringement depends not upon any thing that exists at the time, but upon the cunning which he afterward displays or procures in practicing upon strangers.

It is upon the enterprising manufacturers, who put in possession of the public improvements which would not

otherwise be practically available to them, that we have to depend for substantial progress in the arts. The public is vastly more indebted to them than to the man, who, having procured a patent for some device which does not commend itself to the public in the form in which he has constructed it, lies by and does nothing toward bringing it into practical use. Such manufacturers ought not to be treated as if they were an obnoxious class to be trodden under foot at every opportunity, and less entitled to the ordinary safeguards of the law than the meanest culprits.

The machine manufactured by the defendants not only involved and paid royalty under a large number of patents, but included, besides inventions covered by existing patents, many inventions that had already become the property of the public, some of them inventions of the defendants. It is no exaggeration to say that these machines represented hundreds of inventions which would average much higher in ingenuity and value than that of Graham. The business in which the infringement occurred was carried on during a period of great financial depression, when companies with less resources were failing. The damages awarded by the master were several fold the entire profit made out of that business. If payment were to be made at the same rate for all the inventions embodied in the machine, it would amount to several hundred fold the entire profit to be made out of the business under the most favorable circumstances, and with the exceptional facilities and capacity which these defendants brought to it.

If such an arbitrary measure of recovery is to be adopted in this class of cases, manufacturing becomes impossible. Those who hazard their capital, devote their time and energies, and their inventive talent and mechanical skill, to the introduction of machinery, must expect to see all their investments, and all their profit wrested from them, and conferred upon the idle and inefficient, who have never accomplished any thing. This means one of two things: either the law, which is just in itself, and just in the measure of recovery which it accords, must be

struck from the statute books because the licentious administration of it has made it a terror where it should be a protection, or else every manufacturing industry must be abandoned because of the absolutely illimitable and immeasurable perils that hang over them.

The visiting of such arbitrary penalties (for this partakes rather of the nature of a penalty than of actual damages) must be ultimately prejudicial to inventors themselves, either withering the industries, through which alone invention can be made profitable or available, or forcing the repeal of the law which has become intolerable.

Complainant has relied for evidence of the value of *defendant's* machine (no evidence even professing to show any value in the *Graham combination* is offered) upon a series of advertising circulars, in which defendants eulogize the merits of the machine manufactured by them. These circulars refer in terms to the machine as having taken the grand prize at the Paris Exposition of 1867, years before the construction charged to infringe was even introduced into it.

Certainly, that machine deserves this eulogy. It represents the production of half a century of invention to which many hundreds of inventors had contributed, conspicuous among them all the defendants themselves. It represented the wisdom in selecting, modifying, adapting and combining these inventions which the defendants had acquired through many years of diligent work in the art, supplemented by the excellence of mechanical construction which their experience thus acquired, combined with the most extensive facilities, had enabled them to embody in it. It was a superior machine, and a salable machine, just as emphatically as the Graham machine was a worthless and unsalable one. They were able to sell over twenty-five thousand machines in close competition with others, when he, while his exclusive right to his machine was undisturbed, was unable to sell any. Their machine was worthy of that eulogy, if for no other reason, because of the radical differences in almost every feature of construction between it and the Graham machine. There is nothing in

these circulars from which any inference can be drawn that the defendants sold one more machine, or received one more cent per machine, by reason of the feature in controversy. Dwelling, as they do, upon the various excellencies of the machine, there is no expression that implies any advantage due to any thing that distinguishes the Graham from the Ball or other older machines. Their arrangement embodied the inventions of the Ball machine, supplemented by the inventions of their own patents, and this is what was referred to. It possessed a property not found in the Graham, and no inference can be drawn from this expression that the Graham joint was any better than the Ball or any preceding one. If it were possible to draw such an inference, it would still be necessary, before it could sustain any thing more than a report for nominal damages, to ascertain definitely just what the measure of that advantage was.

If complainant had supplemented these circulars by some competent proof showing, first, that the Graham joint possessed substantial advantages over the Ball or other older constructions; and, second, the fair proportion which the value of this feature bore to the machine as a whole, he might have laid the foundation for a recovery on the score of *profits;* and if he had supplemented that evidence by further evidence, showing that he himself, but for the infringement, would have been able to sell all the machines sold by the defendants, and to make out of that particular feature a definite amount of profit per machine, he might have laid the foundation for recovery on the score of *damages.* He has carefully avoided doing either, and for the reason that either would have limited him to the actual practical commercial value of his invention, which the experience of the patentee had taught him was nothing.

It is, under the provision of the statute giving as a remedy for the infringement "the damages sustained thereby," that the recovery herein has to find its sole warrant. The primary rule of damages, which limits them to that which the complainant has definitely shown by competent evidence that he has been deprived of, and which he was otherwise

in the way of making, is not suspended or modified in patent cases. Where an established license fee has been adopted as measuring such damages, it has been because such license fee has been established by a uniform usage of the trade prior to the infringement, to such an extent as to show a generally recognized market value for the franchise at the time of the trespass, which it may fairly be assumed that complainant would have received but for the infringement.

It is a measure which, even under these limitations, must be applied with caution. Deprived of either of these limitations, it has neither pertinency as a measure of recovery nor competency as evidence. An established license fee means something very different from a demand for a license fee, or a contract for such a fee never acted upon, or an agreement to pay, under the name of a license fee, what is really intended to cover something else. It means something else than procuring an actual payment of a license at so much a machine in some solitary instance. There is no magic about that word royalty, which emancipates it from the ordinary rules of evidence, or makes it *per se* a measure of damages against parties not privy to it. A usage of trade may be evidence in actions either *ex contractu* or *ex delicto*, but only where it is a general usage prevailing at the time the cause of action arose. A usage of the trade which had arisen subsequently—especially one procured by one party in interest—would not be admissible, and *a fortitiori* a subsequent transaction with one or two strangers would not. The same rules govern here.

What a manufacturer will pay for *immunity from disturbance* in selling machines which are *charged* to be *infringements*, but built under other patents, is no evidence even of what that manufacturer would pay for the right to build the patented device. An interruption in the sale of a machine which has acquired an individual goodwill in the market would represent a damage having no necessary relation to the value of the particular feature charged to infringe, and still more remote from the value of the construction of the patent which it was charged to infringe.

There is no rule of law, or equity, or public policy which entitles the patentee, or assignee of a patent, who never manufactures his invention, or incurs the labor and hazard which such manufacture involves, to a recovery against a manufacturer who has not disturbed him in any right he was exercising, manyfold larger than the entire return which there is any reason to suppose he could have realized if he had during the same period devoted his time and capital to the manufacture of the machine. There should be no reward for inactivity, and no penalty for enterprise.

These defendants did not enter a field which complainant was cultivating, and divert a trade which he had built up under the patent. The patentee and complainant had consecutively been in possession of the invention for ten years before defendant's first infringing machine was put on the market. Complainant was by his conduct concurring in the unanimous verdict of all who had undertaken to manufacture under the patent, to the effect that it was unprofitable. There is no circumstance from which the reference can be drawn that he would have realized a cent, if no infringement had risen. The Graham machine had been for years abandoned as unprofitable, and not one has ever since been made by anybody. What more conclusive proof could there be that the damage to complainant from the introduction into defendant's machine of a feature which he was not using was only a nominal one? In awarding upward of one hundred thousand dollars, as actual damages for the use during a short period of what was lying idle with no prospect of its being put into use by complainant, and what had been abandoned as unprofitable, the master has not merely made an extravagant assumption without evidence to support it, he has made that assumption against the most convincing affirmative evidence that complainant has suffered only nominal damages—evidence drawn from the conduct and confessions of the complainant and the patentee, and all who undertook to build or sell the machine.

It is insisted in behalf of defendants:

First. That transactions of one litigant with strangers, lite pendente, are not competent evidence in behalf of the litigant who procured them against the other litigant who is a stranger to them; that a complainant can not, pending a reference to a master, manufacture, either by instruments executed by himself, or by negotiations with strangers, an ex post facto measure of damages to be applied to the trespass of defendants for which this reference is ordered.

It is only as an *established usage* that transactions to which the defendants are not parties can be evidence against them—especially transactions procured by the complainant who seeks to use them. It is an essential of such usage that it should have been established before the controversy arose, and that it be a general usage of the trade; *first*, to exclude the suspicion of its having been procured with special reference to affecting the litigation; *second*, to exclude the suspicion of its being due to exceptional conditions or influence, or to want of judgment or intelligence on the part of some of those participating in it; and *third*, because it is only as an usage prevailing at the time the cause of action arose that it can afford any measure of damages for trespass committed at that time.

Second. That an established royalty to afford any measure of damages must be one which has been adopted, at the time of the trespass, as the uniform mode of farming out the franchise in dealings under the patent, and must have been adopted and operated under in ordinary commercial transactions with different parties to a sufficient extent to fairly express the value which the trade, not some isolated individual, has accorded the franchise; that no royalty is established by granting licenses which are not acted under, or by settlement of pending litigation, or settlements of liabilities which expose the party to litigation, and that this is equally true whether the settlement is nominally for a lump sum, or purports to recite a specified royalty as paid.

If settlements are to be looked to at all, it must be all settlements, not simply exceptional settlements, or parts of settlement, in which the interested party chose to interject the term royalty. If licenses effected during the pendency

of the suit are to be looked to, complainant could not, by employing this term royalty in those where it would make an exceptionally favorable showing for him, and omitting it in all transactions involving a considerable number of machines, make the former alone the criterion, and exclude the latter from consideration.

It is only so far as it is a measure of actual damages (that is to the extent to which the infringement has deprived the complainant of what he was otherwise in the way of making) that an established royalty can be a measure of recovery; and for this purpose it must have been so established at the time of the infringement as to support the presumption that the complainant would, but for the infringement, have realized that royalty on the machines sold by the defendants; which presumption can not arise either where such royalty has not been the fixed and uniform terms upon which the franchise has been enjoyed, or where it has not been so enjoyed at the time of the infringement.

If there has not been a royalty so established, then in the nature of the case some other measure of damages must be resorted to. If the complainant has not been manufacturing under the patent, so as to be affected by competition, and has not any established rate of royalty under it, and can not by other evidence show that he has suffered any damages by infringement, he still has his resort to profits. It does not follow, because he has *failed to show actual damages* to himself or *profits to* complainant, that the master is to transcend the rules, both of evidence and of measure of damages, and accept transactions, procured by complainant during the pendency of the suit, which do not of themselves establish any uniform rate, which are obviously framed with reference rather to their bearing on this controversy than to the particular settlements to which they purport to relate, as giving an enormous *ex post facto* measure of recovery.

Third. That if the value of the invention is to be considered, this value must be proved by witnesses who state under oath, and subject to cross-examination, the particular data upon

which they base their estimates, whose especial qualifications must be made to appear, and subjected to the test of cross-examination before their opinions are accepted as evidence, and whose data must be tested alike as to its accuracy, its sufficiency, and its pertinency. Complainant can not substitute for such evidence contracts procured by him during the litigation, which may have been influenced by considerations lying outside of the value of the franchise, which, even if they represented any honest expression of opinion as to its value, may be due to ignorance, or misunderstanding, or lack of judgment on the part of the grantee, and to misrepresentations on the part of the grantor.

Such transactions are subject to all the objections of being *ex parte*, not under oath, not an unambiguous expression of opinion upon the subject of the controvery, not showing the competency of the witness to estimate the value, not even showing whether he correctly understands the scope of the invention embraced in the patent, not showing the accuracy or relevancy of the details upon which he may make his estimates, and not subjecting him to any of the tests of cross-examination or rebuttal.

There is no class of transactions where persons are oftener victimized than those relating to rights under patents. The patentee, or oftener, the speculator in patents, approaches them with glowing representations of the value of the invention. They know little or nothing of the construction of patents, or the limitations existing in the prior art, or the substitutes which that art may afford. They are led to believe that a patent, which really covers only an insignificant and valueless modification of some subordinate feature in an old machine, embraces severally every element recited in its combination claims, or perhaps the entire machine shown in the drawing. The value of these improvements is magnified. Indirect pressure is brought to bear by advisers who are supposed to be disinterested, but who are secretly promised a share in the profits of the transaction. Individual members of firms or corporations are promised a personal release from the obligations which their company assumes, with special re-

wards for consummating the transactions; or other ulterior inducements are held out. Every art of the accomplished *promoter* is brought to bear. The threat of injunctions that will arrest the sale of expensive machines and bring ruin to a business in which large capital is tied up, and representations of the expense of litigation, and liability to triple damages, are all adroitly urged, and to those who constitutionally indisposed to contention, or whose business would be wrecked by an injunction, they are especially effective. So notorious have the impositions practiced in this way become that most of our states have interposed special legislation to protect the victims, and have branded contracts for patent rights as the subjects of exceptional suspicion. On what principle is the federal court to give to these same transactions a sanctity and a potency in favor of the procurer of them and against strangers, never accorded any other class of contracts; to say that the man who succeeded in procuring one or two trivial transactions of this kind from those who are either on the outskirts of the trade or not in it at all, and involving but a petty investment, shall take the terms of such transactions as an arbitrary factor, to be multiplied a hundred or a thousandfold against the intelligent manufacturer whom he has failed to delude?

The moment you accord the effect of an established royalty as a measure of damages to any thing other than a *usage of the trade established between the patentee and the different grantees, and acted upon sufficiently to establish a recognized market value for the franchise at the time of the infringement, and before the controversy arose*, you not only disregard the essential quality of an established royalty as a measure of damages against strangers, but you expose every manufacturing interest to dangers that are illimitable, appalling, and ruinous.

Fourth. That the law is exceedingly liberal in according to the owner of his patent at his election; first, any actual damages that he can show to have been sustained by him; second, any profits he can show the defendants to have made; and third, the remedy of an injunction to protect him in the exclusive right to

make, use, and sell, if he will assume himself the hazard, expense, and persistent exertions which are incident to the manufacture of every invention; and there is no justification for straining the rules of evidence for one who has not availed himself of either.

There is no reason why the rules governing the computing of evidence and the measure of damages should alike be trampled under foot to enable a complainant, who is not satisfied with either of these remedies, to obtain an extravagant judgment against manufacturers to whose energy and enterprise the public owes whatever practical advantage it has received.

If the defendants had abstained from this manufacture altogether, the complainant, who was not undertaking to manufacture, and who had no licensees manufacturing under his patent, would not have been one cent better off than if the defendants had made a hundred thousand machines.

Something more than the mere ownership of the patent is necessary to put a party in the position of being damaged by infringement, as something more than the mere ownership is necessary to enable him, even where his franchise is respected, to realize any profit out of it. With this property, as with substantially all property, the man who lies idle makes no profit. The public does not get the benefit of the invention unless somebody assumes the expense, the labor, and the hazard of manufacturing and putting it on the market. If from indisposition, from inefficiency, or from consciousness of the inherent worthlessness of the invention when taken by itself, the patentee or his assignee neither manufactures it himself nor through his authorized licensees, nothing is done toward material realization from it, no actual damage is inflicted by the introduction of it by another, and the profit which has been realized by the infringer because of his use of the device becomes the only recovery to which the complainant is entitled. It is extreme liberality, which, under such circumstances, gives him the profit due to the exertions of others in a field he had neglected to cultivate. If he fails to prove that profit, or chooses not to avail himself of it, the

court can not, in lieu of it, give him something else to which he is not entitled, upon a fictitious estimate of damages he has never suffered. It was for his interest, as well as for the interest of the public, to have the invention introduced in some way, and if the defendants, by associating it with other inventions have helped to sell it, and with their good will in the market succeeded in introducing it a thousand times where he could not introduce it once, he would be abundantly recompensed by a small percentage of their profits; for it is obviously their reputation in the market, their business skill and efficiency, and their other inventions with which they have associated it, that has given this extensive sale, where he, the patentee, under the protection of the patent which they had not, and with the field entirely free from competition, was not able to sell two hundred machines.

The only value which can be considered as a measure of recovery (except under the head of profits which are excluded from this account) is that definite return from the franchise which the complainant was at the time of infringement in the way of realizing; and would have realized but for the interference of defendants. All subsequent transactions are incompetent and impertinent; because subsequent; because secured *lite pendente;* because indicating no uniform usage of the trade fixing the value of the franchise, but the reverse; because procured by pending litigation in which considerations of expense of contest would account for the tribute paid, irrespective of any value placed upon the franchise; because so far as these settlements purport to be on the basis of license fees, this is shown not to be *bona fide* but obtained by inducements not appearing on the face of the instrument; and because they bear evidence of having been framed for ulterior purposes.

The uniformity of rate which has to be established as a measure of recovery is a *uniformity in the rates at which the franchise has been measured in transactions with the various licensees*, not simply uniformity of rate per machine obtained from one licensee and rejected by others. *It is the adoption of and concurrence in a uniform rate by the trade*

generally in dealing with the patentee which gives that rate the character of an established market value, and so qualifies it to become evidence against a stranger, not simply the adoption of a uniform multiplier in estimating the amount to be paid in this or that isolated case.

Complainant having failed to show any uniform rate established by concurrent usage, and having failed to furnish any other competent measure of damages, and having waived profits, must recover nominal damages only. He has chosen, for the chance of making the enormous recovery he is contending for, to stake every thing upon this recovery, and must take the consequences.

In *Black* v. *Munson*, 14 Blatch, p. 265, Justice Hunt says (p. 268).

"No price can be said to be fixed, or royalty established, where the patentee varies his price according to the courage, or the ability to resist, of the infringer, or where there are other circumstances showing the absence of a fixed and established fee . . . . I know of no authority and of no principle on which, under these circumstances, it can be held that damages are established by the existence of a fixed license fee or established royalty."

In *Matthews* v. *Spangenburg*, 14 Fed. Rep. p. 350, the circumstances were similar to those in the present case. The complainant had effected various settlements, some of which included a formal license to continue the use of the invention. To prove damages the complainant relied upon showing the license fee received by him. Judge Wallace said, in disposing of the case:

"It is quite impossible from the proof to ascertain what was estimated as the basis of royalty for future use or as damages for previous use, what was allowed for costs, and what by way of compromise. Every thing is left to conjecture and speculation, except the fact that there was a recognition of liability to the complainant for the unlawful use of his invention. The master fixed the complainant's damages at a nominal sum. In this there was no error."

He then cites the language of Justice Hunt, in *Black* v. *Munson*, as applicable to this case.

In *Greenleaf* v. *Yale Lock M'f'g Co.*, 17 Blatch, p. 253, the complainant had granted licenses which were at a prescribed royalty per machine, that is, *at uniform rates for all made by the particular licensee*, but the rate of his licenses *varied between different parties*, some being at lump sums. The master took the lower rate of license fee per machine as the measure of recovery, and awarded damages accordingly.

Justice (then Judge) Blatchford, in sustaining these exceptions, said :

"The evidence does not show that any established license fee was proved in respect to either of the devices. The report is not on the basis of profits. It is on the basis of damages. The amount awarded seems to me to exceed the actual damage on any fair view of the case. The view set forth in *Black* v. *Munson* (14 Blatch. C. C. R., 265) show that, on the evidence in this case, no fixed and established license fee can be held to have been proved by the plaintiff, or any fee which can be properly taken as a measure of the actual damage sustained by the plaintiff."

That case is distinguished from this mainly by the fact that the master there took the minimum, instead of the maximum, rate obtained in the licenses as the measure of recovery; and that those licenses included the patented invention alone, while these included other subject-matter.

In neither of these cases was the objection on the score of the licenses not fixing for the particular license a *uniform rate of royalty per machine*, but on the score that there was no uniformity of use as between the different licenses, and that the licenses were not effected under such circumstances as to give assurance of their being governed by merely ordinary commercial considerations, or expressing a concurrence of the trade generally in the value placed upon the franchise.

In *Seymour* v. *McCormick* (16 How. 480) and *Packet Co.* v. *Sickles* (19 Wall. 611), the established royalties re-

ferred to were those established in the *ordinary course of business*, and *voluntarily acquiesced in* by *the various parties* with whom the patentee dealt.

In *Black* v. *Thorne* (111 U. S. 122) this court said (p. 124):

"It does not always follow, that because a party may have made an improvement in a machine and obtained a patent for it, another using the improvement and infringing upon the patentee's rights will be mulcted in more than the nominal damages for the infringement. If other methods in common use produced the same results, with equal facilities and cost, the use of the patented invention can not add to the gains of the infringer, or impair the just rewards of the inventor. The inventor may indeed prohibit the use, or exact a license fee for it, and if such license fee has been generally paid, its amount may be taken as the criterion of damage to him when his rights are infringed. In the absence of such criterion, the damages must necessarily be nominal."

In *Garretson* v. *Black* (111 U. S. 120) this court said, in affirming the award of nominal damages (p. 121):

"The rule on this head is aptly stated by Mr. Justice Blatchford in the court below: 'The patentee,' he says, 'must in every case give evidence tending to separate or apportion the defendant's profits and the patentee's damages between the patented feature and the unpatented features, and such evidence must be reliable and tangible, and not conjectural or speculative; or he must show by equally reliable and satisfactory evidence, that the profits and damages are to be calculated on the whole machine, for the reason that the entire value of the whole machine, as a marketable article, is properly and legally attributable to the patented feature.'"

In *Sickles Co.* v. *Hayden* (3 Wall. 315) where the patentee had *retained the sole use of the invention himself*, this court held that evidence as to the value of the invention might be considered *with other general evidence* to enable the jury

"to ascertain the damages, or, *in other words, the loss to the patentee or owner, by the piracy, instead of the purchase of the use of the invention.*" (p. 320.)

See also *New York* v. *Ransom* (23 Wall. 487).

Walker on Patents, sec. 559, states the rule thus:

"Money paid for infringement already committed does not establish or tend to establish a royalty."

Also sec. 557:

"A defendant may successfully object to a given royalty as a measure of the plaintiff's damages, unless it was uniform, and was actually paid or secured before the defendant's infringement was committed, by a sufficient number of persons to show that people who have occasion to purchase a license under the patent can afford to pay that royalty. The sale of a single license is not sufficient to establish a royalty, because one purchaser may give a larger sum for a license than he or any other person can afford to pay, whereas such a business error is not likely to be made by a considerable number of persons when buying licenses under the same patent. The unanimous opinion of twelve average men is thought to be the most reliable criterion of guilt or innocence, but no reasonable person would hold that view of the opinion of any one of the twelve. In like manner the unanimous acquiescence of a considerable number of men in a particular royalty is evidence of its substantial justice, while the acquiescence of one only of the same men would have no convincing force. The amount of the royalty relied upon must have been actually paid or secured by the licensees in order to make it a measure of damages against other infringers. Were the rule otherwise there would be no safeguard against collusion between patentees and licensees for the purpose of imposing on infringers and other third parties. . . . . A royalty, in order to be binding on a defendant who was a stranger to the licenses which establish it, must be a uniform royalty. This rule does not imply that a patentee may not change the rate of his royalty as often as he can get a sufficient number of licensees to acquiesce in such a change, but it does exclude from consideration all such licenses as were given at variant rates, for no better reason than variant ability on the part of the licensees to negotiate

for a license or to resist a suit for infringement. So, also, a particular royalty may be successfully objected to by a defendant if it was not established till after the infringement sued upon was committed."

In *Seymour* v. *McCormick*, 16 How., p. 480, this court recognizes the rule that a plaintiff must show himself in the way of realizing the particular profit that he seeks to recover as damages before he has completed the proofs necessary to entitle him to that recovery. It says:

"It was erroneous to lay down, as a rule for the measure of damages, the amount of profits which the patentee would have made if he had constructed and sold each one of the machines which the defendants constructed and sold. There was no evidence to show that the patentee could have constructed and sold any more than he actually did."

Also:

"Actual damages must be actually proved, and can not be assumed as a legal inference from any facts which amount not to actual proof of the fact. What a patentee 'would have made, if the infringer had not interfered with his rights,' is a question of fact, and not a 'judgment of law.' The question is not what speculatively he may have lost, but what actually he did lose."

NINTH. NUMBER OF DEFENDANTS' MACHINES.

The appellee can not dispute the finding of the court below relative to the number of machines to be accounted for.

If complainant was dissatisfied, his only remedy would have been to perfect an appeal in his behalf which he has not done. But there was no error.

Most of defendants' machines, containing what was held to be the infringing feature, were machines made under the name of the "Advance," a name used before the infringement as well as during it, to distinguish one particular style of defendants' machine. This name had no reference to the presence or absence of this feature. Mr. Hanna, the first witness in behalf of complainant, was instructed to make a statement from defendants' books,

showing infringing machines. He made a statement showing all the "Advance" machines made after this feature was introduced. His statement showed 23,438 machines. It appears that, though the "Advance" machine was the one mainly manufactured by defendants containing this feature, they had used it in a small proportion of their "Droppers" (a different style of machine) to the number of 3,762. Hanna, whose business it was to superintend the correspondence and shipping, and who understood the machine held to be an infringement to be that known as the "Advance" (as it in fact was), only included in his first statement the machines of that description. Subsequently he reported the 3,762 droppers, making in all the 27,200 machines reported by the master. Complainant had a book-keeper, Frank, who was a stranger to defendants' books, examine them and report the number of machines made by them. He included in his report all the "Advance" machines built by defendants in 1874, and sold in that and subsequent years. 6,140 of these machines were of the double frame pattern, which are conceded not to be liable under complainant's patent. 1,195 were single Advance reapers, which were made with a rigid bar and platform, not having any feature that is claimed as an infringement of complainant's patent. There were also included 500 droppers which were sold as plain reapers, and which lacked this feature, making in all 7,835 machines of a character confessedly not accountable under complainant's patent. Frank's total amount was 33,577. The 7,835 machines of other constructions, erroneously included, deducted from this leave 25,742, an amount considerably less than that reported by Hanna, which is accounted for by the omission from Frank's report of certain machines which he apparently overlooked. The error of Hanna, in the first instance, was a natural one for a person in his capacity who simply knew that the Advance machine, which they were then making, had been adjudged an infringement, and was ordered by complainant to make a statement of them. It is fully explained, and his deposition stands unrebutted and unqualified. In addition to

that, the master had the books before him to verify his statement. He has reported in favor of complainant all the machines of every description having the infringing feature. With the books before him, the master found no reason to doubt the correctness of the explanation. There is no room to doubt the correctness of this finding. If it had been incorrect, it would have been easy for complainant to have made conclusive proof. (*See Dep. Hanna, pp.* 419–421, *Rec.*)

TENTH. INTEREST.

No interest should have been allowed prior to the ascertainment of the amonnt due by the decree of the court which modified the master's report.

There is no exception made in infringement cases to the rule that unliquidated damages do not draw interest. In the present case the damages certainly did not become liquidated until the master's report was acted upon by the court. Until the correction of that report, the amount of recovery had not been determined. The case was in no respect distinguished from other cases where damages are awarded for past trespass whose amount has to be computed, and in which, until the judgment of the court definitely fixing the amount is entered, no interest is allowed. The rule that interest is not allowable upon unliquidated damages was applied in *Silsby* v. *Foote*, 20 How. p. 378; it was expressly recognized in *Mowry* v. *Whitney*, 14 Wall. p. 434, and again in *Park* v. *Booth*, 102 U. S. p. 96, in which the court says (p. 106):

"Interest on the profits decreed to the complainant should not have been allowed, as was decided by this court many years ago, the better opinion being that profits in such a case are to be regarded in the light of unliquidated damages, which usually do not draw interest without the special order of the court;"

showing that the rule as to unliquidated damages was considered as even more positively settled than as to profits. In the later case of *Root* v. *Railway Co.* (105 U. S. p. 188),

the court, in reviewing the rules governing recovery in these cases, refers to this as the settled law upon that point, though it was not one of the questions upon which the case turned. The proposition of the complainant that interest shall be allowed as upon liquidated damages, from a date long prior to the time when the so-called evidence, upon which the measure of damages rests, was put in process of manufacture, seems too extravagant for discussion. Any allowance of interest not awarded in the decree below is, however, excluded since complainant is here only as appellee.

SUMMARY.

Complainant's patent contributed nothing to the advancement of the art. It *represents* one of the futile and sterile essays at invention which are strewn like rejected *debris* outside of the course in which the art has been progressing. It was a speculative departure in a direction which was liable to wreck every machine into which it was introduced, and certain to wreck every manufacturer who undertook to build it. It was abundantly and repeatedly tried by different firms, under circumstances that gave every incentive to success, and at a period when conditions were exceptionally favorable to the profitable introduction of meritorious improvements in this art. Its failure was inevitable and invariable. The manufacturers could not sell it, the farmers would not use it. Both were ready enough to give it a fair trial. Both expressed by their conduct, and with significant unanimity, the verdict that it was worthless.

Defendant's machine represents a constant line of development from a period many years before Graham's first effort at invention. Defendants had made it a success, and given it a world-wide reputation, before Graham entered the field. It has gone on in the same path, unaffected by any thing that he did, while his machine sunk speedily into the oblivion to which its inherent defects doomed it. Defendants' machine derives its genesis through a line of development which Graham's never entered, and which drew neither hint nor impetus from him.

Graham's modifications on the Ball machine consisted in transferring the pivot for the cross-wise tilt from the heel of the bar to a point in front of the finger beam, and in transferring the pivot for the end-wise tilt from the front end of the draft-rod to a point intermediate between its front end and the front of the finger beam. Defendants have done neither, and the peculiarities of movement and effect due to the Graham construction have been left undisturbed in their tomb.

The court below has awarded complainant as damages several times the entire profit defendants were able to make on their complete machine (if no allowance be made for royalties paid by them on the patents they were building under, or for any of their own patents), which represents the consummation of many years' of invention by the defendants and others whose patents they have acquired, and which owes its sale in no small measure to their experience and skill as manufacturers.

The court has disregarded the express terms of the statute relative to public use and sale, to save the patent from defeat. It has disregarded the legal effect of a patent in relinquishing to the public what it describes as the invention to which it relates, in order to reinvest Graham with what had already passed to the public, subject to the right of his assignees under the first patent. It has stretched the patent to a construction unwarrented either by the prior art, or by the nature of the modification, or by the claims, or by the conditions under which it was allowed. This it has done in order to cover a machine which has an independent genesis to which it owes its success. It has disregarded the fundamental conditions of a measure of damages, and the primary rules of evidence, in order to transfer to the complainant (who never did or underook to do any thing toward a manufacture or sale of the patented machine) more than all the defendants, with all their facilities, experience, skill, capital, good-will, enterprise, and application to the business, could make on the entire machine which they had spent a life-time in developing and bringing to the standard of excellence

which enabled them to sell it at the price and to the extent they did.

It would be difficult to present a case where it was more evident that complaint's patent was neither valid nor infringed. It would be impossible to present one where it was more manifest that he was not entitled to any thing beyond nominal damages.

Respectfully submitted,

ROBERT H. PARKINSON,
Of Counsel for Appellants.

INDEX.

STATEMENT 1
ASSIGNMENT OF ERROR 8
ABSTRACT OF ARGUMENT 11
Device in controversy 11
Synopsis 11
Claims of patent 12
Tilting movements of finger beam 13
Illustrations of tilting movements 13–14
Purposes of crosswise tilt 15
Old methods 16
Rocking and swinging movements distinguished 17–20
Angular movement incident to Graham construction 20–21
Automatic adaptation excluded by Graham construction 21–22
Ball patent, Oct. 18, 1859 22
Correspondence of defendants' machine to Ball type 26–28
Zug patent, Oct. 4, 1859 29
Dolph patent, Sept. 8, 1857 32
Stetson & Maynard patent, May 17, 1859 34
Bartlett patent, Feb. 25, 1862 35
Dodge patent, May 23, 1865 37
Ray & Grant patent, Nov. 18, 1865 37
Bramer patent, Dec. 19, 1865 37
Wemple patent, Jan. 29, 1867 38
McCormick & Erpelding patent, Jan. 15, 1867 38
Summary *resumé* 39
First decision under patent limited it 40–42
Limitations in Patent Office 42
Synopsis 42
First specifications 43
Claims rejected and withdrawn 44
Disclaimer in first patent 44
Limitation of several applications to rocking in both directions, and rocking arm controlling movements and set 45–48
Prior patents limit claims, whether before or after date of invention 48–49
No infringement 49
Synopsis 49
Defendants follow old type; avoid Graham peculiarities 49–53
Defendants' patent 53–54
Graham's device necessarily a failure 54
Synopsis 54
Never could be made or sold, though tried repeatedly under most favorable conditions 54–56
Reasons why failure inevitable illustrated 57–58
Want of novelty and patentability 58
Synopsis 58
Anticipated, if not limited to peculiarities not contained in defendants' 59

Poverty of invention 59–60
Decisions 60
In public use and on sale for more than two years 60
Synopsis 60
General manufacture, sale, and use for commercial and practical purposes 60–64
Porter contract for general manufacture and sale, Feb., 1863 64
Manufactures, sales, and uses during spring and summer of 1863 64–74
Cleveland contract, and manufactures, uses, and sales thereunder 64–74
Transition from experiment to commercial enterprise in spring of 1863 74–75
No benefit from prior Graham patent 75
Graham's false statements about filing 75–77
Decisions 77–81
Statute not in derogation, but in extension, of inventors' rights 81
Relinquishment by prior patent 81
Synopsis 81
Not a case of substitution or division 82
Same device described as constituting invention of first patent 83–85
Claimed, rejected, and disclaimed 83–85
Mischiefs and absurdities incident to such practice 85–87
Decisions 87–92
No damages shown 92
Synopsis 92
False assumptions as to what constitutes an established royalty 93–94
Master's misstatements 95–97
Every practical effort at manufacture of Graham device showed it utterly impracticable and worthless 97–102
Graham's fraudulent method of securing license contracts 99–102
So-called licenses on which master relies merely settlements of suits for infringement effected by attorneys, and sums recited not actually paid on machines released 103–110
No evidence tending to show any affirmative value 111–113
Value not question before master 112–113
Arbitrary award of speculative damages 113–114
Peril of making instruments procured by one party measure against another 114–117
Value of defendants' machine dependent on other elements 117–118
Necessary limitations of license fee as measure of damages 118–120
Legal propositions as to measure of damages 121–127
Decisions 127–131
Number of defendants' machines 131
Appellees concluded 131
Interest 133
Summary 134

Supreme Court of the United States.

OCTOBER TERM, A. D. 1888.

NO. 108.

CYRUS H. McCORMICK AND NETTIE FOWLER McCORMICK, Executor and Executrix of Cyrus H. McCormick, deceased,
LEANDER J. McCORMICK AND ROBERT HALL McCORMICK,
Appellants,
vs.
PETER WHITMER, Administrator of Hugh Graham, deceased.
Appellee.

Appeal from the Circuit Court of the United States for the Northern District of Illinois.

BRIEF AND ARGUMENT FOR APPELLEE.

EPHRAIM BANNING,
THOMAS A. BANNING,
Counsel for Appellee.

EASTMAN BROS., LAW PRINTERS, 187 WASHINGTON ST., CHICAGO.

INDEX.

	Page.
Statement of Facts	1
Appellee's Assignment of Errors	4
General Classifications	5
Characteristics of the Invention	6
History of the Invention and Patent	14
Nature of the Various Defenses	18
The Graham 1867 Patent	18
The Question of Prior Use and Sales	25
The Haines Patent	38
The Dolph Patent	39
The Aultman & Co. Patents	41
The Stetson & Maynard Patent	41
The Zug Patent	42
The Ball Patent	45
The Bartlett and Dodge Patent	46
The Dodge Patent	47
The Ray & Grant Patent	48
The Bramer Patent	48
The McCormick & Erpelding Patent	48
The Wemple Patent	49
The Question of Infringement	52
The Question of Parties	59
The Petition for a Rehearing	64
The Question of Damages	66
Extent of Infringement	70
The Hanna Statement	71
The Franks Statement	74
The Mathematical Statement	81
The Question of Interest	85
The Measure of Damages	90
General Evidence of Utility	92
Specific Measure of Damages	96
The Ten Dollar Licenses	100
The Waterman-Bloom 1870 $10 License	100
The Bloomington 1870 $10 License	101
The Lump Settlements	102
The Remington 1873 Lump Settlement	102
The Sprague 1878 Lump Settlement	104
The Warrior Mower 1881 Lump Settlement	106
The Geneva Lake 1881 Lump Settlement	108
The Glass 1882 Lump Payment	110
The Johnson 1882 Lump Settlement	110
The Licenses at $3 per Machine	114
The Wayne Company 1878 $3 License	114
The Ann Arbor 1880 $3 License	121
The Geneva Lake 1881 $3 License	122
The Remington 1881 $3 License	123
As to all these Licenses	124
General Value of Invention	130
Conclusion	135

Supreme Court of the United States.

OCTOBER TERM, A. D. 1888.

CYRUS H. McCORMICK AND NETTIE FOWLER McCORMICK, Executor and Executrix of Cyrus H. McCormick, deceased,
LEANDER J. McCORMICK AND ROBERT HALL McCORMICK,
Appellants,
vs.
PETER WHITMER, Administrator of Hugh Graham, deceased.
Appellee.

Appeal from the Circuit Court of the United States for the Northern District of Illinois.

BRIEF AND ARGUMENT FOR APPELLEE.

MAY IT PLEASE THE COURT:

This is a bill for infringement of the first and second claims of letters patent No. 74,342, issued February 11, 1868, to Alvaro B. Graham, for an improvement in harvesters. The patent was assigned to Hugh Graham, a brother of the patentee, August 12, 1870 (Record, 235), and the suit was begun in his name, although A. B. Graham, the inventor, continued to have full charge and management of the patent and matters relating thereto. (Record, 242-3).

The bill in this case was filed June 8, 1877. Evidence was taken, and the case brought to a hearing before Judges Drummond and Dyer, sitting together, January 13 and 14, 1880. The court held the case under advisement until March 13, 1880, when they delivered a full opinion, sustaining the patent and finding infringement. (Record, 46). On April 19, 1880, the defendants filed a petition for a rehearing, setting up various matters. (Record, 20). Affidavits

in reply were filed, and on May 7, 1880, the petition for a rehearing and the matters relied upon were fully argued. The court again took the case under advisement until April 22, 1882, when they overruled the petition for a rehearing and filed the opinion delivered March 13, 1880. Two days later, April 24, 1882, the formal decree was entered, and the case referred to Henry W. Bishop, Esq., Master, to assess the complainant's damages. (Record, 53).

The defendant, Cyrus H. McCormick, having died, a bill of revivor was filed June 17, 1884, making Cyrus H. McCormick, Jr., and Nettie Fowler McCormick, executor and executrix of Cyrus H. McCormick, deceased, parties defendant. (Record, 55).

The case was referred to the Master, April 24, 1882. Much evidence was taken and the question of damages fully argued before the Master, and on July 21, 1884, the Master reported that the defendants had made and sold 27,200 machines containing the patented improvements covered by the first and second claims of the patent sued on, and that the complainant was entitled to recover, on the basis of an established royalty or license fee, at the rate of $3.00 per machine, making $81,600.00. He computed interest on this sum at the rate of 6 per cent. per annum, from March 13, 1880—the date of Judges Drummond and Dyer's decision—and reported a total sum of $102,324.80 as due the complainant. (Record, 59-63).

Both parties excepted to this report—the complainant, among other things, on the ground that the Master should have reported 32,382 machines, instead of 27,200, and should have computed interest from the end of each year's infringement, and the defendants, among other things, on the ground that no established royalty should have been found and no interest allowed. (Record, 63-4). These exceptions were argued before Judge Gresham April 14-15, 1885, and on April 27, 1885, Judge Gresham overruled all

the exceptions except those by the defendants relating to interest. He held, however, that interest should be computed on the amount of damages reported by the Master—$81,600—from the date of the Master's report—July 21, 1884—and so he entered a final decree for $85,353.60. (Record, 66-7). From this decree the defendants appealed, and filed their appeal in this court October 12, 1885.

The patent in suit has been the subject of great litigation for many years. In fact, there has not been a day since the latter part of 1874 that it has not been involved in one suit or another. Infringements began early and continued until the expiration of the patent. The first suit, begun in 1874 against *Gammon & Deering*, was defended by Messrs. West & Bond, Chicago, with Mr. B. F. Thurston, of Providence, Rhode Island, as advising counsel. Judge Blodgett decided the case, and his opinion, announced June 10, 1877, is reported in 7 Bissell, 490, and 3 Banning & A., 7. The next suit, begun June 8, 1877, against *Cyrus H. McCormick* and others, after passing through the various stages explained in our opening paragraphs above, is now before this court. The opinion of Judges Drummond and Dyer, announced March 13, 1880, is printed at page 46 of the record, and in 5 Banning & A., 244. This suit was defended by Messrs. Goodwin, Offield & Towle, of Chicago, Mr. E. N. Dickerson, of New York, and Mr. M. D. Leggett, of Cleveland, on the question of the patent's validity and infringement; by Mr. George Harding, of Philadelphia, and Mr. John R. Bennett, of New York, on the question of damages before the Master; and by Messrs. Parkinson & Parkinson, of Cincinnati, on the exceptions to the Master's report. The next litigated suit, begun December 6, 1878, against the *Geneva Lake Crawford Manufacturing Company*, at Milwaukee, was decided by Judge Dyer, October 11, 1880, and his opinion is reported in 11 Fed. Rep., 138. This suit was defended by Messrs. Flanders & Bottum, of Mil-

waukee. The next litigated suit was begun October 16, 1883, against the *Plano Manufacturing Company*, and defended by Messrs. Coburn & Thacher, of Chicago. The decision of Judge Blodgett in this case was announced February 20, 1888, and is reported in 33 Fed. Rep., 917.

In all of these cases the Graham patent has been *sustained* and *infringement* of the first and second claims found. We refer to them to show that these claims must cover *something* that the trade has regarded as *valuable*, since it has been so persistently *used*, and we mention the names of the distinguished counsel who have conducted the defenses to show that, presumably, the claims have been subjected to the most thorough and exhaustive criticism and the most pertinent and promising defenses that ability, time and means could disclose. Many other infringements and suits in different parts of the country were adjusted by a recognition of the patentee's rights.

APPELLEE'S ASSIGNMENT OF ERRORS.

The appellee, in addition to insisting that the decree of the court below should not be modified in favor of the appellants, will insist that there were two or three errors made by the Master and the court below, to the prejudice of the appellee, which should be corrected by this court. The first of these errors relates to the number of machines which the Master included in the account, and the second error relates to the time from which interest should be computed. Both of these errors were committed by the Master, and were duly excepted to by the complainant.

Appellee's formal assignments of errors are:—

1. The court erred in not requiring the defendants to account for 32,382 infringing machines, instead of 27,200, and in not sustaining the following exception to the Master's Report:

"*First.*—That the Master erred in finding that the defendants should only account for 27,200 machines which infringe the complainant's patent,

instead of finding, as he should have done, that the defendants should account for 32,382 machines which infringe complainant's patent." . . .

2. The court erred in not allowing interest to the complainant from the end of each year's infringement, and in not sustaining the following exception to the Master's Report:

"*Third.*—That the Master erred in computing interest only from March 13, 1880, instead of computing it, as he should have done, from the end of each year's infringement upon the sum which the number of machines sold during such year, multiplied by three, would have produced." (Record, 63-4.)

3. The court erred still further in only allowing interest from the date of the Master's Report—July 21, 1884—and thus reducing the amount reported by the Master.

We will argue these exceptions fully when we come to consider the question of damages.

GENERAL CLASSIFICATIONS.

1. All mowing machines are either *single* or *double* frame machines. The *single* frame machines are those which have the tongue, the driving wheels, the cutting apparatus and all the operative parts mounted upon and connected with but one main frame. The *double* frame machines are provided with an additional or supplemental frame, usually suspended beneath the main frame, to which the cutting apparatus is connected. The *single* frame machines are light, simple, cheap. The *double* frame machines are cumbersome, complex and expensive. *Double* frame machines *are no longer made.*

2. All mowing machines have *stiff* or *hinged* cutting-bars or finger-beams. The *stiff* barred machines have the cutting or sickle-bar *rigid* from its connection at its inner end to the frame of the machine to its outer or grain end. The *hinged* barred machines have the cutting or sickle-bar *jointed* at the inner shoe, so that it can be folded up for

transportation. *Stiff* barred machines *have gone out of use.*

3. All mowing machines have *rocking* or *non-rocking* finger-beams. *Rocking* finger-beams conform more or less to the surface of the ground. *Non-rocking* finger-beams cannot be depressed or raised at their guard points, but cut forward on a uniform plane. *Non-rocking* finger-beams *have ceased to be made.*

These three great types comprehend broadly all the mowing machines that were ever made. They indicate generic distinctions, and by bearing them in mind it will be easy to resolve the various patents which will demand consideration into their proper class or genus. If the patent in suit be for a *single* frame machine, then *double* frame machines are not anticipations. If it be for a *hinged* or flexible finger-beam machine, then *stiff* barred machines are irrelevant. If it be for a *rocking* finger-bar machine, then *non-rocking* barred machines are immaterial. And we may say right here, without greatly anticipating our line of argument, that the Graham patent *is* for a *single* frame, *hinged* barred and *rocking* barred machine.

In considering the various questions involved in this case, we propose to group them under four heads—the characteristics of the Graham invention, the history of the invention and patent, the nature of the various defenses, and the question of damages.

CHARACTERISTICS OF THE INVENTION.

The claims involved in this suit, the first and second, are:

"1. The combination, as set forth, in a harvester, of the finger-beam with the gearing carriage by means of the vibratable link, the draft-rod, and the two swivel joints M and M′, so that the finger-beam may both rise and fall at either end, and rock forward and backward.

"2. The combination, as set forth, in a harvester, of the finger-beam, gearing carriage, vibratable link, draft-rod, swivel joints and arm by which the rocking of the finger-beam is controlled."

In the opening paragraphs of his specification, Graham states the objects of his improvements, and it will be seen that the first and second objects state the particular inventions covered by the first and second claims. He says:

"The objects of the improvements which constitute the invention set forth in this patent, are to obtain a *greater capacity* of movement in a *floating* finger-beam, while retaining its connection with a gearing carriage that is drawn forward *by a stiff tongue;* to facilitate the raising and lowering of the finger-beam; to improve the operation of the cutting apparatus; and to transmit motion from the gearing carriage to a reel connected with a finger beam, that rises and falls *independently* of the gearing carriage.

"To these ends the first of my improvements consists of the combination of the finger-beam with the gearing carriage by means of a vibratable link extending crosswise to the line of draft, a draft-rod extending parallel with the line of draft, and two swivel joints, the one for the vibratable link, and the other for the draft-rod, so that the finger-beam *can* rise and fall at either end, and rock forward or backward *independently* of the gearing carriage, while maintaining its connection with it.

"My next improvement consists of the combination of the finger-beam, gearing carriage, vibratable link, draft-rod and swivel joints, with an arm connected with the finger beam to enable it *to be rocked* for the purpose of setting its guard fingers at any desirable inclination to a horizontal line."

After stating the various other objects he had in view, which relate to features not in controversy, the patentee described his mechanism in detail, and added:

"When the machine is used for cutting grass, the said finger-beam may be left free, not only to rise and fall at either end, but also *to rock* or *to be rocked* forward and backward, so that the points of its guard fingers incline toward or from a horizontal plane."

As we propose to subject every defense to the inquiry whether it shows a machine *that accomplished the objects* of Graham's invention, as well as whether it shows a machine which *belonged to his class or generic type* of machine and which *contained the mechanism claimed*, we will fully and particularly enumerate these objects as specified by the patentee.

1. He proposed to "obtain a *greater capacity* of movement in a *floating* finger-beam." This is the *first instance*

in the art where the finger-beam is called a "floating" finger-beam. The name has come into familiar use since Graham appropriated it to happily describe a finger-beam that was free to follow the undulations of the ground, to *float* along over obstructions and down into depressions, and the term frequently appears in subsequent patents. The finger-beam that Graham contemplated and that must be found in an anticipation is a "floating" or rocking finger-beam, as distinguished from a non-rocking or rigid finger-beam.

2. He proposed to obtain his objects in a finger-beam "while retaining its connection with a gearing carriage that is drawn forward *by a stiff tongue*." The machine shown in the drawings is a *single* frame machine. This, like the stiff tongue, excluded the idea of any *additional* or *supplemental* frame. He dispensed with any such cumbersome and expensive contrivance, and connected his finger-beam to the ordinary *single* frame, like that shown in his drawings, that was drawn forward by a *stiff* tongue and, consequently, to a frame that was all the time bobbing up and down, or to one side or the other, as one or the other of the wheels ran over obstructions, or fell into depressions, or as the horses lurched to the right or to the left.

3. He proposed to make his combinations and connections "so that the finger-beam *can* rise or fall at either end and rock forward or backward," or, as he expressed it in another place, "the finger-beam may be left free not only to rise and fall at either end, but also *to rock* or to be rocked forward and backward." It must be *automatic* if desired. It must be free to adjust itself to the inequalities of the ground, so as *not to be dependent* for its beneficial results on the action of a careless, ignorant or inattentive driver. This idea of *automatic* action is expressed in the first claim.

4. He proposed, however, to devise means "connected

with the finger-beam to enable it *to be rocked* for the purpose of setting its guard fingers at any desired inclination to a horizontal line." It may be desirable at times to raise the points of the guard, and let the sickle cut at a higher level of stubble, as in tall grass, or to let them down so that they will hug the ground and run under down, fallen, lodged or tangled grass, which has been beaten down by rains or tangled by storms, and so provision is made for that contingency. The idea of making the finger-beam *controllable*, so as to enable the operator to adjust the points of the guards, is included in the second claim.

5. He proposed to make the finger-beam jointed, or pivotally connected at the inner shoe, so that it could be *folded up* for transportation. This was effected by pivoting the inner shoe, carrying the inner end of the finger-beam to the outer end of the vibratable link, on the axis a', transverse to the finger-beam. The finger-beam was thus rendered foldable, by the *same* mechanism that enabled it to "rise and fall at either end." The advantages of a *foldable* over a *rigid* or stiff finger beam are too obvious to require enumeration.

6. He proposed to secure all of these movements of the finger-beam "*independently* of the gearing carriage." No matter how the machine might lurch, or rise and fall as the wheels passed over irregularities, the finger-beam, floating over the surface of the ground, now mounting an obstruction, and now descending into a depression, would constantly hug the surface, and perform its work with unvarying certainty. It required skill, experiment, invention, to conceive and accomplish these results.

But to permit the finger-beam to rise or fall at either end, and rock forward and backward, a number of *mechanical necessities* arose that had to be provided for, and which must therefore enter into and constitute essentials or characteristics of the invention. While they do not directly

enter, as elements, into the particular combinations claimed in the first and second claims, they are necessary to produce the objects of those claims, and so constitute peculiarities which are inseparably connected with the combinations actually claimed.

1. The pitman rod, which works the sickle back and forth, must be connected to the sickle, or to the machine, by a ball and socket or swivel joint. This enabled the pitman rod to turn as the sickle bar rocked forward or backward, and to rise or fall as the sickle-bar rose or fell. Graham shows and describes this *third* swivel, and it cannot be dispensed with. It is *a necessity*, and no machine can accomplish *all* of the movements which Graham accomplishes without it. This peculiar construction *may be* used in other kinds of machines, but it *must* be used in a machine like the Graham machine, described in the first and second claims of the patent in suit. If it be found *wanting*, there will *invariably* be found a machine that cannot accomplish the free rocking, rising and falling of the finger-beam of the Graham patent.

2. The shoe to which the inner end of the finger-beam is attached must rest and glide *directly* upon the ground. It must not rest or ride upon the drag-bar that extends back from the front of the machine and lies between the bottom of the shoe and the ground. When mounted on the drag-bar it cannot follow the undulations of the ground, nor permit the finger-beam to conform to its irregularities. This is well expressed by Mr. Lotz, the complainant's expert, in speaking of the Ball machine, as compared with the McCormick:

"In the Ball mower, the finger-bar resting upon the drag-bar and pivoted thereto, will have to follow entirely the rising and falling of the drag-bar, while in the McCormick machine we find just the reverse. In that machine the draft-bar, in its up and down motion, has to follow the shoe which carries the sickle-bar as the same passes over and adapts itself to the undulations of the ground." (Record, 87).

3. The drag-bar must have the swivel joint M′, or its equivalent, at the finger-beam end—the end that is nearest to the finger-bar. It must be located at *that* end. If it be located at the end which connects with the frame of the machine, and the other end unprovided with a swivel joint, the finger-beam *could not* rock or roll. The draft-bar inclines from its connection with the finger-beam up to its connection with the frame, and to place the swivel joint at the frame end, instead of at the finger-beam end of the draft-bar, would bring the swivel too high above the plane of the finger-beam to enable the finger-beam to rock and roll on it. It would wholly destroy its function as a means of permitting the finger-beam to rock. To allow the finger-beam to rock, and the points of the guards to rise and fall, the swivel joint M′ must therefore be at the connection between the draft-rod and the finger-beam, and not at the other end. Graham was the first to see and act on this mechanical necessity or principle, and to introduce a joint at this connection. He describes and shows it there, and its location there forms one of the characteristics of his invention.

As pointed out in detail, the first and second claims of the Graham patent cover combinations of mechanisms that produce the *floating* finger-beam; that unite it to a stiff-tongued or *single frame* machine; that enable it to *automatically* conform to the surface of the ground; that yet enable the driver to *controllably* adjust the point of the guards at any desired angle; that permits the finger-beam to be *folded* for transportation; and that accomplishes all of these results *independent* of the main frame.

As the first and second claims are combination claims, an anticipation must not only have accomplished substantially *all of these results*, but must have done so by substantially *the same mechanical means*. We will, therefore, consider the mechanical elements of the Graham combinations as claimed, their construction and arrangement, so that we

can bring prior patents or machines to an intelligent comparison with them.

1. *The finger-beam.* The finger-beam shown and described in the Graham patent is one that is rigidly connected at its inner end to an inner *pivoted* shoe. The use of a pivoted shoe is a necessity, as the finger-beam could not otherwise "rise and fall at either end" or be folded for transportation.

2. *A gearing carriage.* The gearing carriage shown and described is a *single* frame machine, as distinguished from a double or supplemental frame machine.

3. *A vibratable link.* This vibratable or coupling link, shown and described, is attached to the frame at its inner end by a *swivel* connection, so that its outer end can both rise and fall and rock, and is attached to the shoe at *both the front and rear*, so as to afford the necessary *bracing* and *strength* against the *wrenching* of the finger-bar when subjected to the strain of work.

4. *A draft-rod.* The draft-rod shown and described has its rear end pivoted on an axis at *right angles* to the axis on which the inner end of the finger-beam *is pivoted to the shoe*, so that the finger-beam can rock or roll to adapt it to the undulations of the ground.

5. *A swivel joint M.* This joint connects the inner end of the vibratable link to the frame, so that its *outer* end attached to the shoe may *rise* and *fall* and *rock* as the shoe conforms to the inequalities of the ground.

6. *A swivel joint M'.* This joint connects the *rear* end of the draft-rod to the shoe or vibratable link. It contains *two* axes—one *parallel* with and the other *transverse* to the finger-beam. The *transverse* axis of this joint serves to hinge the inner shoe to the forked end of the vibratable link.

7. *An arm "by which the rocking of the finger-beam is controlled."* This element enters into the combination of the

second claim only, and its office is indicated by the words used to describe it.

The courts which have passed upon the Graham patent have considered its first and second claims as covering a machine accomplishing the objects and employing the means above enumerated, though they have not expressed their opinions with the same elaboration or analysis.

In *Graham* v. *Gammon* (3 Banning & A., 8) Judge Blodgett said:

"The feature of the machine covered by the two claims in controversy, is the device for rocking or rolling the sickle-bar, or finger-beam, as it is called by the patentee. This finger-beam is so arranged that it may be rocked or tipped upward or downward so as to incline the teeth or fingers up or down, so that it may be passed over a stone or down into a hollow."

In *Graham* v. *McCormick* (Record, 51) Judges Drummond and Dyer said:

"The two claims of the Graham patent, which are alone in controversy here, are the first and second. The first claim is for a combination of the finger-beam with the gearing carriage by means of the vibratable link, the draft-rod and the two swivel joints, M and M', so that the finger-beam *may* both rise and fall at either end and *rock* backward and forward; and the second claim is the same as the first, with this only added, that an arm is attached to the vibratable link by which the rocking of the finger-beam is *controlled* by the driver. The object of this invention, as set forth in these two claims, seems to be mainly to produce the rocking motion of the finger-beam *as described and by the method described*."

In *Graham* v. *Geneva Lake Co.* (11 Fed. Rep., 145) Judge Dyer said:

"The Graham invention, as it is covered by the first claim, consists of a combination composed of six parts, namely, the gearing carriage, finger-bar, vibratable link, draft-rod, and swivel joints M and M'; and the arrangement of the combination is such as to permit the rising and falling at either end, and the rocking forward and backward of the finger-bar. The second claim embraces the same combination with one additional part, which is the arm or lever by which the rocking of the finger-bar is controlled."

In *Graham* v. *Plano Company* (33 Fed. Rep., 917), Judge Blodgett said:

"Infringement is charged of the first and second claims of the patent,

which describe and cover the device by which the finger-bar is made to rise and fall at either end, and rock forward or backward, independently of the gearing carriage, while maintaining its connection with it. The first claim is for the device shown, whereby the finger-beam is enabled to rise and fall at either end and rock forward or backward, independently of the gearing carriage; and the second claim covers this device together with a lever by which the finger-beam may be rocked by the driver or operator of the machine for the purpose of setting its guard fingers at any desirable inclination to the horizontal line."

Thus we find that the Graham machine, described and claimed in the first and second claims of the patent in suit, has certain *peculiarities or characteristics* and certain *physical elements or mechanical means* to effectuate them. They may be called the ear-marks of the Graham invention. The absence of *any one* of them changes the mechanism, impairs the result and constitutes a different machine.

The objects sought to be accomplished by Graham were of great importance. They formed a desideratum which had long been sought by manufacturers of mowing machines. Other inventors had attempted to secure them. Some of them had approached the desired result, but none of them had fully accomplished it. In some respect or other their mechanical means had failed to compass it, unless by the sacrifice of simplicity, economy or other indispensable requisite of a successful machine. And Graham was the first to succeed and embody in one machine all the elements of mechanism and features of advantage that we have found entering into the combinations secured by his first and second claims.

HISTORY OF INVENTION AND PATENT.

In the fall of 1862 Graham was a poor wagon-maker, living in Waukegan, Illinois. He had worked at his trade and on a farm alternately, and in the summer of 1862 he was "doing little or nothing." He had a remnant of his

farming in the shape of an old Kirk, Marsh & Smith harvester, and in the summer and fall of 1862 he "reduced or improved it into a two-wheeled, hinged barred mowing machine"—the first two-wheeled, hinged barred machine he had ever seen. In the winter of 1862 and 1863 he "constructed a model showing something of the finger-bar attachment for a two-wheeled, flexible barred mowing machine with a tilting or rocking capacity." "That was in December, 1862, or January, 1863." In February, 1863, or earlier, he entered into an arrangement with Porter Brothers, of Waukegan, Illinois, to manufacture the machines. The evidence and the entries of Porter Brothers' books show that he was at work for them on the machine in February, 1863. Three machines were got out in 1863, but they proved a failure. (Record, 106-9).

Porter Brothers lost money in the enterprise, and in the fall of 1863 withdrew from its prosecution. This left Graham stranded, but in November and December, 1863—not November, *1865*, as erroneously printed in the record, on page 106—Graham visited his uncle, David Graham, at Coldwater, Michigan, and while there constructed a model containing the perfected invention. He at the same time borrowed $200 to use in obtaining his patent. The note given to his uncle for this money is in evidence, and is dated November 13, 1863. The model was shortly afterwards sent to Munn & Co., and thence to the Patent Office with Graham's first application. This application was sworn to February 25, 1864, and in its drawings fully shows the invention in controversy. (Record, 106-9).

Graham continued his efforts and experiments, undiscouraged by his failure of 1863, and in January or February, 1864, induced another party, George Cleveland, to assist him in the manufacture of his machine. The agreement with Cleveland, which is in evidence, is dated February 4, 1864. This enterprise also came to nothing, owing to the

failure of the machines in 1864, and on September 13, 1864, the agreement was cancelled and Cleveland pocketed his loss, as Porter Brothers had done before him. Graham now looked around to find some other party to help him financially, and finally persuaded Porter Brothers to lend a hand again. So, in the winter of 1864-5, Graham and Porter Brothers reconstructed the machines made by them in 1863 and put them into the harvest of 1865, when they proved successful. Four or five of them were sold in June and July, 1865, and used at various places in Lake County, Illinois, during the harvest season of 1865. One of them is now in evidence, and shows the parts in question. From that time on until 1869, Graham's machines continued to be manufactured at Waukegan and sold in the market. (Record, 106-9).

As above stated, Graham swore to his application, as the affidavit and other evidence shows, February 25, 1864. He had borrowed $200, November 13, 1863, from his uncle to prosecute his application, had made a model in November and December, 1863, had sent it to Munn & Co., of New York, had received the papers back from them, and on February 25, 1864, had sworn to the application and returned the papers *with the fees* to Munn & Co. to be filed. But as the files of the application show, the papers were not filed by Munn & Co. in the Patent Office until December 2, 1865. They had lain in their hands nearly two years. Munn & Co. offer not one word in explanation of their delay, nor do the defendants for them. Graham cannot explain why his application was not promptly filed. He says he instructed Munn & Co. to push the matter. He paid them all the fees they required or called for. He regarded a patent as his capital, and essential to building up a business of manufacturing. He wrote repeatedly, urging that the matter be proceeded with as rapidly as possible, and always supposed that the delay was attributable to the

Patent Office. In fact, he never learned to the contrary until he saw a copy of the papers after the beginning of this suit. (Record, 106-9).

This application, sworn to February 25, 1864, and filed December 2, 1865, contained five claims. The first claim related to the invention *now in suit*, and the last four to other improvements. On the 30th day of December, 1865, the Office rejected the first three claims, but offered to allow the other two. This offer not being accepted, an amendment was filed on the 24th day of March, 1866, substituting a new or amended claim in the place of the first rejected one, the first claim still having reference *to the invention* in controversy. On the 4th of April, 1866, this claim was also rejected, thus making two rejections of substantially the same invention. In September, 1866, Graham engaged Mr. E. S. Renwick to take the place of Munn & Co. October 1, 1866, the Office wrote Mr. Renwick that the original application had been twice examined and the last two claims allowed. The question thus presented to Mr. Renwich was whether he should appeal or file a divisional or supplemental application for the matter which the Office refused to allow, and take a patent for the matter not rejected. He concluded that it would be better to file a divisional application, and so advised Mr. Graham. Such an application for the matter rejected in the first application, and for some additional features which Graham had made, was accordingly prepared. This application, with the claims *now in suit*, for the subject matter of the original first claim rejected in the first application, was filed February 11, 1867. The two applications were thus pending in the Patent Office at the same time. But on the 18th of June, 1867, Mr. Renwick wrote the Commissioner, making a formal withdrawal from the first application of the invention *now in suit*, saying: "The effect of this amendment, as your Honor will perceive, is to limit the invention claimed under *this* patent

to what your Honor has stated in the official letter of October 1, 1866, to be allowed"—to the features *not now* in controversy. This withdrawal being made, a patent was issued July 23, 1867, on the first application, leaving the part which had been taken out still pending. This July, 1867, patent contained the last two of the original claims, but *none relating to the invention in controversy.* It contains, however, the same description of this invention as the original specifications and drawings, nothing but the claims having been struck out. The patent in suit was afterwards allowed and issued on the second application, February 11, 1868. All these matters appear on pages 108-9 of the record, and from the copy of the files of the 1867 patent printed on pages 386 to 406 of the record.

NATURE OF THE VARIOUS DEFENSES.

In considering the various defenses relied on, we must necessarily be guided to a large extent by the arguments urged in the court below. While new counsel have come into the case, the old arguments and defenses remain, and will probably constitute the substance of the presentation here.

THE GRAHAM 1867 PATENT.

This patent was not issued until five months and twelve days *after* the filing of the application for the patent sued on, and can not be claimed to anticipate it, in the usual acceptation of that term. But as no inventor can have two valid patents for the same invention, the position was taken by the defendants in the court below, that the first patent rendered the second void.

In the first place the two patents were not taken out to cover the *same inventions.* The 1867 patent was *intended* to cover one part of the Graham machine, and the 1868 patent another and distinct part. Their *claims* are widely

different, and it is from the *claims* that their scope and effect must be determined. (*M'Millan* v. *Rees*, 5 Banning & A., 274.) When thus viewed, the patents are for different inventions, and one cannot affect the other.

In the next place, after the proceedings in the Office, the 1867 patent could not have been reissued to cover the invention in controversy. In applying for such a reissue Graham would have been required, under the Statute, to make oath, and the Office to judicially determine, that he had failed to claim the invention in the original patent through "inadvertence, accident or mistake." Of course, compliance with these requirements would have been impossible in the face of his deliberate withdrawal of the invention from the original application. The courts have held that a reissue obtained to cover an invention that had been rejected by the Office, and the rejection acquiesced in and the claims withdrawn, would be void.

The language of this court in a number of cases clearly indicates the status of such a patent.

In *Mahn* v. *Harwood* (112 U. S., 359) this court, after holding that it is a good defense to a suit on a reissue to show "that the Commissioner exceeded his authority in granting it," said:

> "The same defense may be established by showing from the record that there was no inadvertence, accident or mistake in drawing up the specification of the original patent; for the statute only gives a reissue when the original is defective by inadvertence, accident or mistake. Thus in *Leggett* v. *Avery*, 101 U. S., 256, 259, the reissued patent embraced a claim which had been presented on the application for the original patent and rejected. It was apparent, therefore, that the omission of that claim in the original was not, and could not have been, the result of inadvertence, accident or mistake, but was the result of design on the part of the Commissioner and acquiescence on the part of the patentee; and so far as that claim was concerned the reissued patent was properly held to be void."

Another reason why the 1867 patent could not have been reissued to cover the invention in controversy, is that the moment that the 1868 patent sued on was issued Graham

became estopped from ever claiming such a reissue. In the language of Judge Story in *Barrett* v. *Hall* (1 Mason, 473):

"The grant of a subsequent patent for an invention is an estoppel to the patentee to set up any prior grant for the same invention, which is inconsistent with the terms of the last grant."

Under this ruling the issuance of the 1868 patent—the "subsequent patent"—estopped Graham from setting up the 1867 patent—the "prior grant"—as covering the invention claimed in the 1868 patent, either in its terms or in its possibilities of reissuance.

Another reason why the 1867 patent could not have been reissued to cover the invention described and claimed in the first and second claims of the 1868 patent, is, that the moment these claims were transferred to, or inserted in, the second application, which resulted in the patent in suit, the first application became, as to such claims, dead and abandoned and incapable of revival. As said in *Ex parte Bramwell* (Dec. Com., 1870, 76):

"A party having deliberately abandoned his original application, in order that in a new one he may present his invention in a more complete and perfect form, and who receives a patent through the medium of such later application, can not be permitted subsequently to revive the old one."

In *Ex parte Hyde* (Dec. Com., 1871, 111), where a party had filed a subsequent application and took a patent on it, and then sought to secure the same thing on his first filed application, Commissioner Leggett said:

"It follows that the application on which said patent was granted was filed as a substitute for the earlier one, and consequently that the earlier one was deliberately abandoned at the time when the substitute was filed *and by the very act of filing.* All the vitality that it possessed was in that moment transferred to the new case, *and the old application perished beyond all power of renewal.*"

Under these decisions it is clear that Graham, after he had withdrawn the claims in controversy and inserted them in the second application, had abandoned the old application as to them, and could not have made it the basis of a

patent. If he had attempted to procure a patent on the first application, for the claims withdrawn, after filing the second application, it would have been refused. But could that first application, which could not have been made, after filing the second application, the basis of a *patent* for these claims, be so essentially different after the issuance of the 1867 patent as to be made the basis of a *reissued* patent for these claims? The idea is preposterous. If the original application had become extinguished as to the claims in controversy, so that it could not have been revived or amended to cover these claims *before any patent was ever issued on it*, it follows necessarily that it could not, *after* a patent had issued on it for other features, be so revived or amended in a reissue proceeding.

But, in our view, the question whether a sufficient reissue could have been had of Graham's first patent is wholly immaterial, as, notwithstanding the first, there were no irregularities committed in applying for or issuing the second patent. It should be remembered that Graham's second application was filed *while his first was pending*, and more than five months before his first patent was issued. As will be presently shown, the ordinary practice of the Office allows an applicant to proceed in this manner, by dividing the invention, and filing several applications at the same time; but if this were otherwise, still very good reasons exist why such a practice was proper in Graham's case. The subject matter claimed in first patent is entirely different from the invention secured by the first two claims of his second patent, the only thing in common between them being that they both relate to harvesters. The general rule requires separate patents in such cases; the only exception to this rule is thus stated by Commissioner Duell, in the case of *Jesse Jopling*, 8 O. G., 1032:

"Where the devices are used in connection to subserve a common end, or adapted to each other, as co-operating to produce a given result, and

the use of each device or its equivalent is necessary to that result, although each device, when considered by itself, may amount to a new invention, yet when so combined, they constitute an exception to the general rule that separate inventions should form the subject of separate applications."

Graham's two inventions cannot be considered as falling within this exception; hence, being proper subjects for separate patents, it was competent for the Office to require a division and separate applications. But if it was competent for the Office to thus enforce its rule, it was certainly Graham's privilege to comply with it voluntarily and in advance of coercive measures. (*Godfrey* v. *Eames*, 1 Wall., 324). This being exactly what he did by filing his second application, and thus dividing the invention, how can such proceedings be now considered as a mistake, much less a mistake fatal to his second patent?

In another view, if Graham's first application had been granted without any change, or withdrawal of parts of the invention, it is clear that the patent thus issued could have been reissued in divisions, in such a way as to secure the respective invention by separate reissue patents, exactly as they are now secured by separate originals. But, as Acting Commissioner Spear once said:

"The question of division in the matter of reissue is just the same as in the matter of an original application."

Ex parte Heginbotham, Dec. Com., 1875, 94.

If this division, then, would have been proper in a reissue application after the first patent was granted, it follows, necessarily, that it was equally proper before, in the original proceedings.

If authorities be considered necessary, the following will certainly suffice to show that the action of the Office in granting both patents was proper and according to the regular practice in such cases.

A decision of this court on this question, exactly in point, is that in *Suffolk Company* v. *Hayden* (3 Wall., 315). It appeared in that case that Hayden applied for a patent in

December, 1854, for an improvement in Cotton Cleaners. While this application was pending he filed another application for another improvement, on which a patent issued March 17, 1857. The first application still remaining in the Office, a new application for the same improvement was filed in June, 1857, on which a patent issued December 1, 1857. Subsequently, the original application of December, 1854, was taken up, and a patent issued on it in September, 1860.

Hayden sued the Suffolk Manufacturing Company for infringement of the patent of December 1, 1857. On the trial before Judge Sprague the defendant's counsel asked the court to rule that the patent was void, because the improvements which were described and claimed in it were described, but not claimed, in the prior patent of March; but the court, holding a contrary doctrine, refused to so rule.

The question being again urged on appeal, was thus disposed of by this court (pp. 318–19), Mr. Justice Nelson delivering the opinion:

"The first point of the plaintiff in error is, that the description in the patent of March, of the improvement patented the December following, and on which the present suit is brought, and omission to claim it on such earlier patent, operated as an abandonment, or dedication of it to the public, and that for this reason the subsequent patent of 1st December was void. But the answer to this ground of defense is, that it appeared that Hayden, the patentee, had pending before the Commissioner of Patents *an application* for this same improvement *at the time* he described it in the specification of the 17th March, which was doubtless the reason for not claiming it in this patent. The description in no sense affected this application thus pending before the Commissioner, and while it remained before him, repelled any inference of abandonment or dedication from the omission to again claim it.

"This original application before the Commissioner for a patent, among other things, for an improvement in the screen of the long trunk not having been acted upon by that officer, a new application was made by Hayden separately, for this improvement, and which resulted in the patent of 1st December, 1857, on which the present suit is brought.

"We do not perceive any objection to this proceeding. It simplified the application and disembarrassed it from its connection with other improvements claimed; and doubtless hastened the granting of the patent. The Office, however, subsequently acted upon this original application, and on the 11th September, 1860, granted a patent to the plaintiff, and, as is alleged, for the same improvement embraced in the patent of the 1st December, 1857, the one in question.

And it is insisted that, for this reason, this prior patent for the same improvement is void. This is obviously a misapprehension. The last, not the first, is void.

This decision in the Hayden case has been thus digested by Mr. Bump, in his recent work on Patents, p. 212:

"If an application is pending for a patent for several improvements, a new application may be made for a patent for one of them, for it simplifies the application and disembarrasses it from its connection with other improvements claimed."

In *Singer* v. *Braunsdorf*, 7 Blatch., 535, one of the Singer sewing machine cases, Judge Blatchford said:

"It is also set up as a defense that some or all of the improvements covered by the patent sued on were described and represented, though not claimed, in a patent granted to Singer, August 12th, 1851, and in a reissue thereof, granted to him October 3d, 1854, and in a patent granted to him April 13th, 1852.

"It is a sufficient answer to this defense to say, that it is disposed of by the determination already arrived at, that the application made by Singer in December, 1854, remained in force, as a continuing application, until the granting of the patent in 1856, and that the patent is to be regarded as having been issued on that application. Such determination is as applicable to the defense thus raised, as to the defense of constructive abandonment. A patent is never invalidated by the fact that the invention claimed in it was described, but not claimed, in a patent granted subsequently to the making of the application for the patent secondly issued, but before it was granted."

In speaking of this 1867 patent, Judge Drummond (Record, 49) said:

"It was not a proper case for reissue. There was no defective or insufficient specification. The inventor had not claimed more than he had a right to claim as new. The case as it is put is one where there was the description of an invention which was not claimed, the claims in controversy here having been withdrawn, and where we must assume that the person was

entitled to a patent, inasmuch as the Office subsequently granted him a patent for the invention described. On general principles we think that where a person has, within the meaning of the patent law, made an invention which he has described in specifications, including other matters of invention for which last a patent has been issued, that he should not be precluded for that reason alone from applying for and obtaining a patent for that which was not claimed in the first patent.

"The object of the patent law was to protect a party who made an invention which was useful, provided he complied with the terms of the law and a patent issued for the invention, and unless there is something in the law which declares a patent issued under such circumstances to be invalid, it is the duty of the courts to sustain a patent for an invention thus made. It is to be borne in mind that the application for the second patent, that of 1868, the one in controversy here, was made while that for the previous patent was pending and before the prior patent had been issued. There was thus pending before the Patent Office two applications at the same time where the claims were different, and we understand it to be in accordance with the practice of the Patent Office to allow applications to be made at the same time, by the same party, for different parts of the same machine."

To the same general effect is Judge McKennan's decision in *McMillin* v. *Rees* (5 Banning & A., 269).

For the reasons, therefore, that the 1867 patent does not *claim* it, or *attempt* to claim it, could never have been *reissued* to cover it, was *issued* while the application for the patent in suit was *pending*, was issued in accordance with the *practice* of the Patent Office, and conflicts with *no established* principle of patent law, we submit that it wholly fails as a defense to this suit.

THE QUESTION OF PRIOR USE AND SALES.

As before stated, Graham was, at the time of making his invention, very poor. He had no facilities for manufacturing, or giving his machines proper experimental tests. He did not own a farm on which they could be operated, nor a team of horses to experiment with. (Record, 112.) Hence, it was necessary for him to enlist the interest and assistance of others, both in manufacturing and testing his machines.

In fact, this was indispensable, and, to test his machines, he must have the active co-operation of farmers.

As is well known, the harvest season is short, and is one of the greatest activity among farmers. In spite of the most vigorous efforts, it often happens that large losses occur through unfavorable weather, or inability to harvest the grain in season. In addition to these considerations, which would make farmers reluctant to try an unknown machine, Graham and his machine were both without reputation or strong financial backing. It is not difficult, therefore, to believe Graham's statement (Record, 112) that it was necessary to offer special inducements in order to get farmers to risk their time, and possibly jeopardize their crops, in giving his machine proper trials in the practical work of the harvest field. The strongest inducement that he could offer to farmers would naturally be to offer them the privilege of purchasing his machines, if they proved successful, at a greatly reduced figure. In other words, he had to offer to put the machines out on trial, with the agreement that they were to be returned, or made perfect, and that there were to be no sales until the machines were perfected.

The 1863 machines all proved failures as soon as put into practical work in the harvest field or shortly afterward. Some of them were returned almost immediately, and others at the convenience of the parties. (Record, 110). Graham says that "the machines were anything but a success; they were a failure." The only one used to any extent was the machine taken out to Mr. Dooley's farm, which appears to have been run, after a fashion, for several weeks, and which, for some reason not explained, was never returned. The evidence, however, shows conclusively that in no sense was it a practical or successful machine. In speaking of it, Graham (Record, 110) says that he "experimented then for some time—don't know just how long—applied different devices to the machine on the farm of Mr. Dooley."

Mr. Dooley (Record, 320-1) was examined in reference to this machine, and says: "I would not be positive" that it was bought in the year 1863. He says that he was to pay Graham "I think one hundred and twenty-five dollars, to the best of my recollection, when perfect." He paid seventy or eighty dollars, and Mr. Graham, the next year, gave him another machine to take the place of this first one.

When he was asked as to how the machine worked in 1863, he said: "Well, we had to have a team on the road about all the time for repairs; when it kept together it done well." (Record, 321.) The second machine seems to have proved a worse failure than the first, and with both of these Graham machines on his farm he went and bought a Ball machine at an expense of $165. (Record, 327).

Mr. Dooley, being asked whether he considered the first machine a successful one in the actual ordinary work of the harvest field, replied: "I think if it could keep itself together it would do very well—that is, not continually breaking and bursting." (Record, 324). He says it was repaired "very often."

The evidence shows that none of the machines proved really successful until the harvest of 1865.

It would have been strange indeed if Mr. Graham, without ever having built a mowing machine, without ever having had any experience in building them, without having means, tools, factories and facilities for building them, had made his 1863 and 1864 machines operative, practical and successful machines. It was natural, and we may say inevitable, that his first efforts should have been attended with failure and loss. The defendants themselves, in 1866, began to build a new kind of mowing machine, and Mr. Hanna, who tested it, testifies that "the machine was a noted failure." (Record, 312). The defendants at that time had had a great many years' experience in build-

ing reaping and mowing machines; they had large factories, special machinery and unlimited means; they had skilled mechanics and inventors in their employ, from whose knowledge and suggestions they could draw; they had, in short, everything that favored the production of a successful machine; and yet the evidence is that their new machine was a "noted failure." Under these circumstances, it hardly lies in their mouths to insist that Graham's first machines were and must have been a complete success, and so operative and practical as to require no trials or experiments. The idea is preposterous!

Dooley says that he paid seventy-five or eighty dollars for *both* of his machines, the money being paid sometime after the first was used, and after the parties had agreed that it should be made perfect, or replaced by a new and perfect one. Minsky says that he paid for his machine after using it the first season, but is not clear when he got it or paid for it. (Record, 329-331). It is certain, however, that he did not get it before 1864, and probably that he did not pay for it before 1865. Stearns says that he paid Cleveland for his machine before taking it out in the summer of 1864. But this machine, proving a failure, was returned pursuant to agreement, within three or four weeks, and he then received all of the money back except twenty dollars.

It should be added, that in all of these cases the money was paid to *other* parties than Graham, and without his knowledge; and also that it was distinctly understood that Graham had applied, or intended to apply, for a patent for his improvements.

It will probably be insisted by appellants, as it was in the court below, that this was a sufficient public use and sale of the invention to invalidate the patent, under the sixth, seventh and fifteenth Sections of the Act of 1836, and seventh Section of the Act of 1839. There are several an-

swers to this position, any one of which is sufficient to show its fallacy.

In the first place, the machines were merely put out on trial, or possible sale on trial, under the circumstances stated. Graham says, and he is not disputed, that this course was *necessary* in order to secure facilities for giving his machines full and proper tests in practical work. And actual practical work in the harvest field was the only way to demonstrate whether they were capable of successful operation. But whether necessary or not, *it was certainly a very proper course*, inasmuch as it subjected the machines to thorough practical trials, and thus secured the public against imposition by the patent being for a crude and imperfect invention.

As already said, it was competent for Graham to employ all necessary help in *testing* as well as in *manufacturing* his machines; and, being without money, it was competent for him to sell his machines, or even to give them away, if necessary, in order to get his invention fully and practically tested in the ordinary work of the harvest field. That his arrangement with farmers was made in good faith, and for the purpose of experiment, is shown by the fact that Mr. Dooley got both of his machines for seventy-five or eighty dollars—that is, if the transaction be considered a sale, the two cost less than half the ordinary price of a single machine.

In any view, it is insisted that the so-called sales can only have effect as grounds of defense from the time they were consummated or became absolute. Hence, if allowed any weight, it will become important to determine just when they actually occurred, for, at most, they were merely conditional at first, and consummated afterwards by payment of the money. In case of "sale or return,"

"The sale becomes absolute, and the property passes only after a reasonable time has elapsed, without the return of the goods. 'In sales on trials'

the mere failure to return the goods within the time specified for trial makes the sale absolute, but the buyer is entitled to the full time agreed on for trial, as he is at liberty to change his mind during the whole term." Benjamin on Sales, Sec. 595.

The following language of Judge Shepley, in *Henry* v. *F. S. Stove Co.*, 2 Banning & A., 223, would seem to be directly in point on this question:

"There is one case only of a sale clearly proved before February 14, 1855, (the time the two years began to run), and no evidence tending to show more than two or three sales before that time, and all of them accompanied with a notice of an intention to apply for a patent, and all of these during the time when he was experimenting upon, and before he had perfected his invention, and attained sufficient perfection in the castings to satisfy him that his invention was practically successful. As in most, if not in all of these instances, the stoves were delivered on trial, to be returned if the invention did not work satisfactorily, they are to be regarded rather in the light of such practical tests as the law permits an inventor to make, than as such public sales as would tend to show abandonment or mislead the public into a belief that the inventor had made a dedication to the public."

The law is well settled that this class of inventions, not to speak of others, may be experimented with in public; and it has been repeatedly held that two or three years is a very reasonable time in which to complete an invention of this kind. *Wheeler* v. *Russel*, Dec. Com., 1872, 32; *Kirby* v. *Johnson*, Ibid, 88.

"Where a party practices his invention himself for the purpose of experiment or completion before he takes out a patent, the inference that he intends to surrender his invention to the public does not arise, and, consequently, a dedication cannot be proved by evidence that shows only experimental practice by the inventor, whether in public or in private. Indeed, it may be stated, as a general test in cases of supposed dedication, through the using, exercising or practicing the invention by the patentee himself previous to his application for a patent, that whenever the evidence stops short of proving such a use, exercise or practice for the purpose of gain, a public use will not be proved." Curtis on Patents, 389.

In *Elizabeth* v. *Pavement Company*, 97 U. S., 134, it appeared that Nicholson, the inventor, had put down about seventy-five feet of his pavement in a public highway, and

permitted the same to be used constantly for six years before applying for a patent. It was urged in defense that this was a sufficient public use to invalidate the patent involved in that suit; but this court held otherwise, on the ground that the use was experimental. In the course of the opinion, delivered by Mr. Justice Bradley, the court said:

"Can it be said that the invention was in public use? The use of an invention by the inventor himself, or of any other person under his direction, by way of experiment, and in order to bring the invention to perfection, has never been regarded as such a use. Curtis Patents, Sect. 381; *Shaw* v. *Cooper*, 7 Pet. 292.

'Now, the nature of a street pavement is such that it cannot be experimented upon satisfactorily except on a highway which is always public.

"When the subject of invention is a machine, it may be tested and tried in a building, either with or without closed doors. In either case, such use is not a public use within the meaning of the statute, so long as the inventor is engaged, in good faith, in testing its operation. He may see cause to alter it and improve it, or not. His experiments will reveal the fact whether any and what alterations may be necessary. If durability is one of the qualities to be attained, a long period, perhaps years, may be necessary to enable the inventor to discover whether his purpose is accomplished. And though during all that period he may not find that any changes are necessary, yet he may be justly said to be using his machine only by way of experiment; and no one would say that such a use, pursued with a *bona fide* intent of testing the qualities of the machine, would be a public use within the meaning of the statute. So long as he does not voluntarily allow others to make it and use it, and so long as it is not on sale for general use, he keeps the invention under his own control, and does not lose his title to a patent.

"It would not be necessary in such a case that the machine should be put up and used only in the inventor's own shop or premises. He may have it put up and used in the premises of another, and the use may inure to the benefit of the owner of the establishment. Still, if used under the surveillance of the inventor and for the purpose of enabling him to test the machine and ascertain whether it will answer the purpose intended, and make such alterations and improvements as experience demonstrates to be necessary, it will still be a mere experimental use, and not a public use, within the meaning of the statute.

"Whilst the supposed machine is in such experimental use, the public may be incidentally deriving a benefit from it. If it be a grist mill or a

carding-machine, customers from the surrounding country may enjoy the use of it by having their grain made into flour, or their wool into rolls, and still it will not be in public use, within the meaning of the law. . . .

"It is sometimes said that an inventor acquires an undue advantage over the public by delaying to take out a patent, inasmuch as he thereby preserves the monopoly to himself for a longer period than is allowed by the policy of the law; but this cannot be said with justice when the delay is occasioned by a *bona fide* effort to bring his invention to perfection, or to ascertain whether it will answer the purpose intended. His monopoly only continues for the allotted period in any event; and it is to the interest of the public, as well as himself, that the invention should be perfect and properly tested before a patent is granted for it. Any attempt to use it for a profit, and not by way of experiment, for a longer period than two years before the application, would deprive the inventor of his right to a patent."

The operations of 1863 also fall very clearly within the rule of *Coffin* v. *Ogden* (18 Wall., 124), namely:

"The invention or discovery relied upon as a defense must have been complete and capable of producing the result sought to be accomplished; and this must be shown by the defendant. The burden of proof rests upon him, and every reasonable doubt should be resolved against him. If the thing were embryotic or inchoate; if it rested in speculation or experiment; if the process pursued for its development had failed to reach the point of consummation, it cannot avail to defeat a patent founded upon a discovery or invention which was completed, while in the other case there was only progress, however near that progress may have approximated to the end in view. The law requires not conjecture, but certainty."

In this case Judges Drummond and Dyer (Record, 48) said:

"It is manifest that the only machine made in 1863 which is distinctly proved to have been sold was delivered on trial and warranted, and should be regarded rather in the light of the use of the invention for such practical tests as the law permits an inventor to make, than as such a public sale or use as is contemplated by the statute. At that stage of the inventor's work his invention was largely in experiment and trial. It could only be tested by practical use in the field, and it was essential that it should be so tested by farmers on their farms. The inventor was then struggling, as inventors often do, to establish the success of his invention. It was necessary that thorough experimental tests should be made, and that he should have the assistance of others in making them, and it was manifest, we think, that the machines of 1863 were not yet so perfected as to be practical machines,

capable of successful work. In the light of all the testimony, we conclude that what was done by the patentee with reference to the use of the machine in 1863 was intended by him, and was in fact, for the purpose of experiment, and as a test of the machines with a view to their perfection. This part of the defense rests upon a claim of forfeiture of rights secured by the patent. To justify the court in sustaining it the proofs should be clear and satisfactory; the right of the infringer to invalidate the patent for this cause should be undoubted, and in view of these considerations, we think the patent should be held valid against this objection."

In another view, the character of Graham's experiments is wholly immaterial; for even if it be conceded that, in the strongest sense, the invention was in public use and on sale from the time of his first operations, still this was less than two years before his application should be considered as filed, and so could not invalidate the patent now in suit. This presents the question as to how far back the complainant is entitled to protection.

As already explained, there was never any delay on Graham's part, or on the part of his solicitors, *of which he had any knowledge*, in filing or prosecuting his applications. This being the case, his two applications must be considered as a part or continuation of the same proceeding, so that, on this question, the complainant is entitled to the same protection as if the patent sued on had been issued on the first application. And the circumstances are such that, if necessary for the complainant's protection, the first application should be considered *as filed at the time* it was placed in the hands of Munn & Co., the first of 1864.

Smith v. *Goodyear Company*, 93 U. S., 500.
Godfrey v. *Eames*, 1 Wall., 317.
Singer v. *Braunsdorf*, 7 Blatch., 521.
Bell v. *Daniels*, 1 Fish., 377.
Howe v. *Newton*, 2 Fish., 532.
Blandy v. *Griffith*, 3 Fish., 616.
Jones v. *Sewall*, 6 Fish., 364.
Goodyear Company v. *Willis*, 7 O. G., 45.
Henry v. *F. S. Stove Company*, 2 Banning & A., 223.

Birdsell v. *McDonald*, 6 O. G., 682.
Case v. *Hastings*, 7 O. G., 558.
Ex parte Howes, Dec. Com., 1872, 42.

The law on this subject is thus stated by Mr. Justice Strong, in the first of the above cases, *Smith* v. *Goodyear Co.*:

"The remaining defenses to the bill rest, mainly, on the assumption that the new petition presented to the Patent Office in 1864 cannot be regarded as a continuation of the application made for a patent on the 12th of April, 1855. But this cannot be conceded. The history of the application, as we have given it, forbids such an assumption. No act of Cummings' amounted to a withdrawal of his first petition, or to an acquiescence in its rejection. It is true he filed a second petition in 1864, but he accompanied it with substantially the specification that remained in the Office, and with the same drawings. It was a mode of procuring another consideration of his rejected claim, and the Commissioner regarded it as such. The Act of March 2, 1861, gave him authority thus to regard it. He replied to the application that his claim was embraced in an application filed by him in 1855, and rejected for want of novelty, admitted that it had been improperly rejected, and suggested an amendment to make it correspond with his former amended claim. It is impossible, in view of these facts, to regard the effort to obtain a new patent in 1864 as a new and independent application, disconnected from the application made in 1855. It is but one stage in a continuous effort.

"In *Godfrey* v. *Eames* (1 Wall., 317), the first application was actually withdrawn, and a new petition was presented at the time of the withdrawal with a different description of the invention, but as the thing patented under the second might have been engrafted as an amendment of the first, it was ruled that all the proceedings constituted one application. This court said: 'If a party choose to withdraw his application for a patent and pay the forfeit, intending at the time of such withdrawal to file a new petition, and he accordingly does so, the two petitions are to be considered parts of the same transaction, and both as constituting one continuous application.' We are not aware that filing a second petition for a patent, after the first has been rejected, has ever been regarded as severing the second application from the first, and depriving the applicant of any advantage he would have enjoyed had the patent been granted without a renewal of the application. The contrary was decided by the Circuit Court for the Southern District of Ohio, in *Bell* v. *Daniels* (1 Fisher, 372), and *Blandy* v. *Griffith* (3 Ib., 609); and these decisions are founded in justice and sound reason.

"If, then, as we think it must be held, the proceeding to obtain the patent was a continuous one from 1855 until it was granted; if the application of 1855 is not severable from the proceedings of 1864, there is no

foundation whatever for the allegation that the invention was abandoned to the public, and that it was in public use or on sale for more than two years before the inventor's application. The first use of it proved, by any other than Dr. Cummings, was in 1859, and there is no evidence that this was with his consent. And the proof respecting his health and pecuniary condition, together with his constant efforts to obtain the necessary means to prosecute his right, rebuts all presumption that he ever abandoned, actually or constructively, either his invention or his application for a patent. That he never intended an abandonment of his invention is perfectly clear, and it was not his fault that granting the patent was so long delayed."

In *Henry* v. *Stove Company* (2 Banning & A., 223) a second application was presented nearly two years after the first was filed, and a year and nine months after it was rejected. Judge Shepley, considering this question, said:

"Under such circumstances the date of his application for a patent is to be considered to be the date of his first application which was rejected, and not the date of this renewed application which was granted and on which the letters issued. (*Godfrey* v. *Eames*, 1 Wall., 317). To the same effect is a decision by Mr. Justice Clifford in this Circuit (*Jones* v. *Sewall*, 3 Official Gazette, 630); and it has frequently been held that the date of filing the application on which the patent is granted is not the date from which the time of use or sales is to be reckoned, but that the time is to relate back to the date of *any* application. . . .

"To defeat the patent on the ground of a public use and sale more than two years prior to the application of Dodge for a patent, such public use and sale must be proved more than two years prior to his first and rejected application. That application was formally filed February 14, 1857, and for the purposes of this case, that may be taken as the date from which the time of the two years prior use and sale is to be reckoned. Although to save a forfeiture it might, if necessary, be just to give him the benefit of the informal application made to the Commissioner when he transmitted his model, December 27, 1856, the day after the date of his oath to the application, signed and sworn to on the 26th.

"In *Birdsell* v. *McDonald* (6 Official Gazette, 682), the court were of the opinion that the placing, by an inventor, of his model and application and fee in the hands of a solicitor within two years after public use was sufficient to prevent forfeiture, although the solicitor negligently omitted to file it until after two years.

"The fact of a public use or sale more than two years prior to the application, when clearly proved, is fatal to the patent. But the objection rests upon the principle of forfeiture, and is not to be so favorably regarded as

to dispense with the necessity of strict proof. Public use in good faith for experimental purposes, while the inventor is perfecting his invention, and for a reasonable period, even before the beginning of the two years of limitation cannot affect the rights of the inventor."

The language held by Justice Swayne in *Birdsell* v. *McDonald* (6 O. G., 682), to which Judge Shepley thus referred, is as follows:

"There is no foundation for the objection that the invention was abandoned to the public. The measures taken by the complainant to procure a patent, and its subsequent issue, are conclusive against the proposition. It is true the application was not filed in the Patent Office until the 3d of February, 1858, more than two years after it was sworn to; but the delay was owing to the remissness of the agents to whom the business of procuring the patent was confided. They had the application, the model, and the requisite funds in their hands during all the intervening time.

"The complainant was ignorant of their neglect, and should not be held responsible for the delay that occurred. He sold no machine prior to two years before the filing of the application. He used the one first made publicly, but to what extent and under what circumstances is not clearly shown by the evidence. It is shown that the use, whether more or less, was tentative, and that, by the light of experience thus acquired, he made the subsequent and better ones. Public use in good faith for experimental purposes and for a reasonable period, even before the beginning of the two years of limitation, cannot affect the rights of the inventor. The objection rests upon the principle of forfeiture, and is not to be favorably regarded. Every reasonable doubt should be resolved against it."

In *Case* v. *Hasting* (7 O. G., 558) Commissioner Thacher, considering the effect of a solicitor's delay in filing an application, said:

"Case employed a patent solicitor to prepare and prosecute an application for letters patent, putting into his hands the necessary models and papers, and paying him the fees required. It appears, however, that the solicitor cheated his client. He never filed the application, although he represented to Case that he had done so, and put him off from time to time with statements that the application was delayed in the Patent Office. Under these circumstances and in view of the decision in the case of *Russell & Erwin Manufacturing Company* v. *Mallory* (5 Fisher, 632), I do not think the delay of Case can be held to work either forfeiture or abandonment of the invention."

In the court below, Judges Drummond and Dyer, in considering this part of the case, said:

"It is claimed by the plaintiff that under this state of facts, the application for the patent embracing this invention for the purpose of fixing the time when the two years should begin to run, should be considered as having been made on the 25th of February, 1864, when the patentee's first application was put in charge of his solicitors; or, if that be not so, that it should be considered as made when that application was filed in the Patent Office, on the 2nd of December, 1865; so that the two years would embrace the years 1864 and 1865. On the other hand, it is contended by the defendants that the two years began to run on the 11th of February, 1865, because the second application, upon which the present patent was issued, was filed on the 11th of February, 1867, and that the connection between the first and second applications was effectually broken, under the circumstances, so that the two applications could not be considered one continuous proceeding.

"The rule is well understood, that if an invention has been in public use or on sale with the knowledge and consent of the inventor, more than two years before his application for a patent, it would render the patent invalid; but it is clear that in order to determine whether the case is within the rule we must consider whether the particular devices which the inventor claims to have invented were perfect, so that they embody a complete invention. We have some doubts, even upon the theory that the two applications should be considered as parts of one and the same proceeding, whether the patentee's first application can be regarded as made within the meaning of the law, at the time it was placed in the hands of his solicitors, in February, 1864; but we think, under the circumstances which attended the efforts of the patentee to obtain a patent, together with the connection which the second application seems to have with the first, that for the purpose of fixing the time when the two years began to run, the second application should be treated as a continuation of the first, and that both are part of one proceeding.

"In this respect this case is not wholly unlike that of *Smith* v. *Goodyear Dental Vulcanite Co.* (93 U. S. 500), where the court held that the effort to obtain a new patent in 1864 ought not to be regarded as disconnected from the original application made in 1855, and that it was but one stage in a continuous effort. It is true in this case, unlike that, a patent was granted on the first application covering the claims which were not rejected, and the patent in suit was granted on the second application; but the subject matter of the second application was embraced in the first, and the invention now in controversy was described in the specifications and the drawings which constituted part of the first application, and we think it may be said that the continuity of the proceeding which originated

in the first application was not broken up to the time when the patent for the invention in suit was granted in 1868. See also *Blandy* v. *Griffiths*, 3 Fish., 616.

"In view, therefore, of the circumstances under which Graham made his second application and withdrew from the first the claims covering the invention now in suit, we cannot say that the proceeding should be severed so as to make the two years date back from the 11th of February, 1867; and we think that the two years within which the invention could be sold and publicly used without invalidating the patent, began to run on the 2nd of December, 1863, which was two years prior to the filing of the first application." (Record, 47-8).

In view of all these considerations, we submit and insist that the defense that the Graham invention was on sale or used more than two years before his application for a patent, must fail, for the reasons: 1. That his machines, as constructed and operated in the years 1863 and 1864, had not reached such a stage of completion as to make them practically operative machines in actual work. 2. That the use to which they were subjected was merely experimental, and for the purpose of thoroughly and practically testing them, and that the so-called sale to Dooley was made for the purpose of securing a practical trial of the machine—was not consummated in 1863, and payment, in part, only made upon an agreement to furnish him a second or perfected machine. 3. That the application which resulted in the patent in suit is to be regarded as a continuation of the original application, filed December 2, 1865, instead of as a separate and independent proceeding; and, 4. That the original application itself should be considered, if necessary, for the purpose of avoiding a forfeiture or abandonment, which the courts never favor, as filed at the time Mr. Graham swore to the papers in February, 1864, and placed them, with the government and solicitor's fees, in the hands of Munn & Co. to be filed.

THE HAINES PATENT.

The patent to Jonathan Haines, of September 4, 1855, (Record, 347), is admitted by defendant's expert to have "no

rocking motion to its finger-bar forward and back." (Record, 295). It cannot, therefore, anticipate the Graham patent. Moreover, the machine shown in this patent has no vibratable link, swivel joints or means for permitting the finger-bar to rock forward and backward, nor is the pitman rod provided with any means to enable it to turn, which must be the case if the finger-beam is intended to rock. The finger-bar, as described in the patent (Record, 349), "is composed of two pieces, H, I, united together by bolts passing through a lap of their adjoining ends." This makes a solid, rigid connection from one end of the finger-bar to the other, extending clear across the frame. There is no inner pivoted shoe, no vibratable link, no swivel joints M or M'. The finger-bar cannot be raised or lowered at *either* end, or at any other given point; unless the whole bar be also raised or lowered. In fact, the finger-beam cannot even be folded for transportation. The Haines patent belongs to the class of *stiff* or *rigid* barred machines, while the Graham patent belongs to the class of *hinged* or *folding* barred machines. If the Haines machine be used on rough or uneven ground, it must necessarily cut a very uneven stubble, and otherwise do unsatisfactory work. If the machine be required, for instance, to run along the side of a hill, where the ground is six inches lower at the outer end of the finger-bar than next to the wheels, the stubble at the outer end must, of course, be six inches higher than at the inner end of the bar. In the Graham machine, on the other hand, the outer end would follow the ground and cut as closely as at the inner end.

THE DOLPH PATENT.

The patent to George C. Dolph, of September 8, 1857, (Record, 350) is for an improvement on the Ball machine of June 11, 1856. Its drag bar, I, has no swivel connection

with the finger-beam. The specification itself says (Record, 351): "One end of the brace-bar, I, [the draft-bar] is firmly attached to the cutter-bar, and the other end to a wrist at J." It speaks of tipping the finger-bar and cutters by raising the front end of the draft-bar. This draft-bar, which the specification calls the "brace-bar I," passes under, and carries the shoe so that it cannot glide along directly over the ground. As the shoe rests on the drag-bar, it cannot follow the undulations of the ground. The points of the guards cannot fall below the level, nor automatically conform to the surface of the ground. Nor does the Dolph patent contain the mechanism of the Graham patent. It has neither of the swivel joints M and M′, nor the arm *l* of the second claim. The link C, which takes the place of the Graham vibratable link, is so hinged to the machine that it cannot turn to permit a backward and forward rocking of the finger-beam. The joint, where it is connected to the machine, has but one axis, and that parallel to the frame and transverse to the cutting-bar, which would necessarily prevent the rocking of the finger-bar. Nor is its pitman rod arranged to turn to accommodate itself to changes of position in the finger-bar, which shows that no such rocking as that of the Graham patent was contemplated. It belongs to the class of *non*-rocking finger-bar machines, while the Graham patent belongs to the class of *rocking* bars.

Defendant's expert, Mr. Powers, in speaking of this Dolph patent, said:

"The hinges or connections of the draft-rod and vibratable link are not swivel or free joints. The finger-bar could clearly be raised or lowered at either end, and could be elevated or depressed slightly in front by means of an up and down motion of the draft-rod in front, but the finger-bar could not have had a very material amount of rocking motion." (Record, 295.)

In *Graham* v. *Gammon* (3 Banning & A., 10), Judge Blodgett, after considering several patents, said:

"In the Dolph patent it is equally difficult to find any mechanism which

was intended to secure the peculiar motions which I find in the patent to Graham."

THE AULTMAN & CO. PATENTS.

The patents to C. Aultman & Co., assignees of Lewis Miller (Record, 351-358), of which the original was issued May 4, 1858, and the reissue July 19, 1859, were also before the court in the case of *Graham* v. *Gammon* (Record, 305), but as they were not specially urged at the hearing they were not mentioned or referred to in the opinion. These patents do not provide for any rocking motion of the finger-bar whatever. The only movement of the finger-beam mentioned in them is that "it may be raised up, folded over, and rested upon the main frame, for facility of transportation." (Record, 352.) The Miller patents do not contain either of Graham's swivel joints M or M′, nor any swivel in the pitman rod, to permit the rocking of the finger-beam, nor any arm to enable the driver to raise or lower the guards. They belong to the class of *non*-rocking finger-bars. They say not a word about *rocking* the finger-beam, and no rocking motion could possibly take place with the connections shown and described.

Defendant's expert, Mr. Powers, in speaking of the original of these Miller patents, says that "it does not appear to have possessed any torsional or rocking function." (Record, 295.)

In *Graham* v. *Geneva Lake Co.* (11 Fed. Rep., 144), Judge Dyer said:

"The Aultman patents, the last of which was a reissue, do not anticipate the Graham invention, because they do not, I think, provide for any rocking motion. They only provide for a movement by which the finger-bar may be raised and lowered at either end, or folded over for transportation; and I cannot from the specifications and drawings find that they contain the Graham swivel joints, or the arm for rocking the finger-bar."

THE STETSON & MAYNARD PATENT.

It is not claimed by defendant's expert that the Stetson and Maynard patent of May 17, 1859, (Record 356) con-

tains the combinations of the claims in suit. On the contrary, Mr. Powers says that it "does not show a connection free and independent from the frame of the finger-bar, the supports of the finger-bar being attached directly to the rear of the frame." (Record, 305-6.) The fact is, this patent does not have any draft-rod, vibratable link or swivel joints. Its finger-bar is so attached that it cannot be raised or lowered, except with the frame, and the frame is affected with every motion of the shoe or finger-bar. In no sense does it embody the elements of the Graham combinations.

The complainant's expert, Mr. Lotz, in speaking of the Stetson & Maynard patent, said:

"In this patent the sickle-bar is riveted to the end of the shaft, which shaft is journalled in boxes, rigidly secured to the rear of the main frame. No draft-bar, no vibratable link, and no swivel joint M and M′ are described or shown. The sickle bar, for its rising and falling, is dependent upon the frame." (Record, 73.)

THE ZUG PATENT.

The machine shown in the patent to David Zug, Oct. 4, 1859, (Record 362) does not have either of Graham's swivel joints M and M′, and is very different, both in its movements and mechanism from the combinations in controversy. The link corresponding to Graham's vibratable link is bolted between two ears, at 16, the bolt being parallel with the frame and transverse to the longitudinal axis of the finger bar. This would prevent any rocking motion, such as is secured by the Graham patent. Nor is the pitman rod provided with any swivel joint, or its equivalent, to permit it to turn or roll, to accommodate itself to the rocking of the finger bar. Such rocking, therefore, could not have been contemplated. The draft-bar has no swivel joint M′, which is necessary to permit the points of the guards to rise and fall, as they rock in the Graham patent.

The Zug patent must be assigned to the class of *non*-rocking finger-bars.

The complainant's expert, Mr. Lotz, in speaking of the Zug patent, said:

"No swivel joints M and M' are shown or described in said patent. The joints or hinges connecting the vibrating link to the frame and to a draft-bar, are represented as simply loose enough to allow the folding of the finger-beam upon the frame, and no intention for a rocking movement of the finger-bar is shown." (Record, 73-4).

The defendant's expert, Mr. Powers, also gave the Zug patent only a subordinate place. When asked what patents he regarded as most nearly approaching the Graham, he never mentioned the Zug! He was asked:

"X Q. 8. Which, of all these patents offered in evidence by the defendants, do you consider as the nearest to Graham's of 1868—was the most complete anticipation of the inventions secured by its first and second claims, or either of them? A. The Graham of 1867 appears to me to be the most complete anticipation, so far as the first and second claims are concerned, and the Frank Bramer, of 1865, I regard as almost as complete an anticipation of the first claim, if not equally so." (Record, 306).

It thus appears from the defendant's own evidence that the nearest approaches to the Graham invention are found, not in the Zug, but in patents issued after his invention was in the field and his application in the Patent Office!

This patent has been before the court from the beginning of the Graham litigation. In *Graham* v. *Gammon* (3 Banning & A., 9) Judge Blodgett said:

"It is contended, for instance, that in the model of the Zug patent, which is put in evidence, there is a provision for the rocking or rolling of the finger-bar; but I must say that I can find no such feature, either in the specification or model. It is true that he suggests that it may be tilted, but I think when you take his description of the construction, the only tipping he refers to is the lifting of the finger-bar by means of a lever, and not the tilting or rocking motion provided for by Graham. There is a link extending back and fastened to the frame, but there is no swivel joint and no provision for rocking or rolling the finger-bar by means of a swivel joint. And even if he had a swivel joint at the point where the link is attached to the frame, the long shoe proceeding forward from the vibratable

link or the connecting link, would effectually prevent or interfere with the rocking motion which the patentee, Graham, has accomplished; so that I do not find the mechanism in this patent."

In the court below, Judges Drummond and Dyer, under an obvious misapprehension of the character of joint 16 in the Zug patent, speak of it as "substantially similar" to the swivel joint M. They say, however, that "there is no joint M′," and that "Zug does not claim that the finger-bar in his machine has a rocking motion." The swivel joint M, in the Graham patent, is one with two axes, one *parallel* to the longitudinal axis of the finger-bar, and the other *transverse* to it. *Both of these axes* are necessary, to permit the vibratable link to rise and fall and turn or roll as the finger-bar turns and rolls longitudinally. The joint 16 of the Zug patent contains only the axis which is *transverse* to the longitudinal axis of the finger-bar, and therefore necessarily prevents the rocking motion of that bar, and radically distinguishes it from the swivel joint M. Under this misapprehension of the character of the joint 16 of the Zug patent, the court below said that "the difference between the Zug machine and the first two claims of the plaintiff's patent is not very marked." But they went on to say that, in view of the description contained in the specification of the Zug patent, and in the plaintiff's patent, they were—

"Inclined to think that the plaintiff's patent may be sustained on the ground that there is a difference in the manner in which the draft-rod is attached to the shoe, and the finger-bar to the shoe and to the vibrating link, and there is also a difference in the manner in which the combination of the various parts are adjusted, and that there is an effect produced in the plaintiff's machine which does not exist in the Zug machine. In the plaintiff's machine there is a rocking motion and not a mere vibratory motion such as exists in the Zug machine, in consequence of the open clevis; neither is there in the plaintiff's machine the yielding of the draft-rod, as described in the Zug patent, and it is obvious, too, that, from the manner in which the parts are constructed in the Zug machine that there is only a small vibratory action of the finger-bar; so that, on the whole, we

think that the combination as described in the plaintiff's patent may be sustained." (Record, 52).

THE BALL PATENT.

The patent to E. Ball, of Oct. 18, 1859, (Record, 365-8) does not have Graham's mechanism, or any rocking motion of the finger-bar; it does not have his vibratable link, his arm *l*, nor his swivel joints M and M'. The shoe, resting and riding on the long drag-bar, has no down tipping motion, so that, at most, the guards of the finger-bar can only be raised above the horizontal. The drag-bar extending under the shoe prevents it from gliding directly over the surface of the ground and conforming to its irregularities. This patent must be classed with *non*-rocking barred machines.

The defendant's expert, Mr. Powers, in comparing the Ball and McCormick machines, said:

"The draft-rod extends under the shoe and finger-bar, and prevents the shoe or finger-bar from falling down lower than a level, whereas, in the McCormick machine, the draft-rod extends over the shoe and finger-bar to the same point of attachment as in Ball, and thus, being out of the way underneath, allows the finger-bar to fall lower than in Ball, to fall even below a level, to any extent desired." (Record, 297).

In *Graham* v. *Gammon* (3 Banning & A., 10) Judge Blodgett, after considering other patents, said:

"The same may be said of the Ball patent. Ball has a finger-beam attached firmly to the shoe. It is also steadied by a rod which reaches back to a bracket attached to the gearing carriage, and there is apparently a swivel or loose joint by which it is attached; but there is no joint forward, and no means by which the mechanism, the finger-bar, as such, can be rolled or tipped in the manner provided by the Graham patent."

In the court below, Judges Drummond and Dyer said:

"In the Ball patent, while there may be said to be something equivalent to the swivel joint M of the plaintiff's machine, where it is attached to the frame, and also something similar to the draft-rod and the arm, there is nothing to produce the rocking motion, which is the essential object in the first two claims of the plaintiff's machine, and, consequently, there is no swivel joint M' as in the plaintiff's machine; so that there is nothing in the

Ball machine to prevent the validity of the combination in the first two claims of the plaintiff's patent." (Record, 51).

THE BARTLETT AND DODGE PATENT.

The patent to Bartlett & Dodge, of Feb. 25, 1862, (Record, 368) is said by defendant's expert to be the first that provided for controlling the rocking motions of the finger-bar, which function, he guardedly says, "is possessed to some extent." (Record, 306).

This patent, among other things, lacks the indispensable swivel joint M'. Its finger-bar does not have any down rocking motion. The shoe, resting and riding on the drag-bar instead of gliding along directly on the ground, necessarily prevents such motion. The defendant's expert admits that it does not have all of the functions of the Graham invention and that it is different in construction. Its pitman rod is unprovided with any swivel or two-way joint to permit it to turn, thereby preventing a rocking of the finger-bar. This shows that such rocking was not contemplated. It belongs, in classification, to the *non*-rocking finger-bars.

While the patentees speak of the rocking motion of the finger-bar and of the finger-bar rising at either end, and of doing these things independently of the main frame, they do not show the mechanism employed by Graham to secure these results, nor a mechanism that would effect these results.

The defendant's expert, Mr. Powers, in speaking of the Bartlett & Dodge patent, only treated it as limiting Graham to his "special device," and said:

"The Graham clearly shows a different construction, and, perhaps, an improvement upon Bartlett & Dodge." (Record, 297).

Complainant's expert, Mr. Lotz, in speaking of this patent, said:

"In this patent the finger-beam is rigidly connected to a long shoe which reaches to the front end of the machine. It provides for but very

limited rocking movement of the finger-bar, controlled at the front end by a lever pivoted upon an extension of the axle. It has not the swivel joint M', and its rocking movement is in no wise analogous to that described in the Graham patent, the shoe depending entirely for adjustment on the action of the driver. The points of the guards can only be raised above the horizontal line, and cannot be dropped below." (Record, 74).

In *Graham* v. *Gammon* (3 Banning & A., 10) Judge Blodgett, after considering the Ball patent, said:

"So, too, in the Bartlett and Dodge mechanism. We find this same long shoe extending forward, with no device for rocking or rolling; and the same may be said of the Zug patent. There is no possibe device in the patent for the rocking, and no device or means by which the finger-beam can be rolled or tilted in the manner provided in the Graham patent."

It may be well to here quote Judge Blodgett's final conclusion in reference to all of the above patents considered by him, namely:

"And it may be said in reference to all these prior patents, that, while they speak of rocking or tilting or tipping the finger-beam, they, none of them, describe any mechanism by which it can be accomplished. It is a well settled principle of patent law that the mere suggestion that a given result can be obtained is not patentable, and does not anticipate a patent by another, but a mechanism or device must be described by which the suggested result is attained. The mere saying, for instance, as was done a century, or two or three centuries ago, that vessels could be propelled by steam, did not deprive Fitch or Fulton of their right to a patent on the mechanism by which they accomplished that result. The mere idea that intelligence could be communicated by electricity did not deprive Morse of his patent upon his mechanism. So, the suggestion by these various inventors who ante-dated Mr. Graham in various improvements upon the harvester, that the finger-beam may be tipped or may be rocked, does not deprive Graham of his right to a patent upon his mechanism by which he did so, as long as they did not show a mechanism by which they accomplished the same result."

THE DODGE PATENT.

The patent issued to John A. Dodge, May 23, 1865, (Record, 371) was before Judge Blodgett in *Graham* v. *Gammon* (Record, 305), but was not considered of sufficient importance to merit special notice in the opinion. As it was not issued until a year and a half after Graham had

completed his invention, it cannot possibly have any effect as anticipating or limiting his claims now in suit. But, aside from this objection, it does not have the vibratable link, nor the swivel joints M and M′, of the Graham combination, to speak of no further differences. The inner shoe of the finger-bar rested and rode upon the draft-bar, instead of gliding along directly upon the ground. It could not, therefore, conform to irregularities of its surface. It belongs to *non*-rocking finger-bars.

THE RAY & GRANT PATENT.

The patent to Ray & Grant of Feb. 14, 1865, (Record, 374) was not issued until two full years after Graham's invention was completed, and his model made for the Patent Office. For this reason alone it cannot possibly have any effect as a ground of defense, but must be considered as virtually out of the case. If it provides for any rocking motion of the finger-bar, it does so without the use of Graham's mechanism. Both the swivel joints M and M′ are wanting. There is no vibratable link allowing the raising and lowering of the finger-bar, *independent of the frame*. On the contrary, the connection is such that the finger-bar depends entirely upon the motions of the frame, or supplemental frame, for the regulation of the movements.

THE BRAMER PATENT.

The patent to Frank Bramer (Record, 376) was issued Dec. 19, 1865, more than two years after Graham's invention was made, and more than two weeks after his first application was actually filed in the Patent Office. It must, then, be also considered as virtually out of the case.

THE MC CORMICK & ERPELDING PATENT.

The patent to Leander J. McCormick and Lambert Erpelding (Record, 379) was issued Jan. 15, 1867, more than three years after the completion of Graham's invention, and

more than thirteen months after his first application was filed. It is not possible, then, that it can either anticipate or limit the claims now in suit. Nor can it avail the appellants anything to claim that the machine shown in this patent was actually manufactured in 1865-6, and put on the market for the harvest of 1866; for before that time Graham's completed machine was being manufactured and sold at Waukegan, and in actual use on farms in Lake County.

THE WEMPLE PATENT.

The patent issued to Andrew Wemple, Jan. 29, 1867, (Record, 382) was before the court in *Graham* v. *Gammon*, but was held insufficient as a ground of defense.

In *Graham* v. *Gammon* (3 Banning & A., 11) Judge Blodgett, in considering this patent, said:

"The other patent put in evidence, and the one which to my mind comes the nearest to anticipating this plaintiff, is a patent to A. Wemple, of 1867. Mr. Wemple shows in his specifications and drawings a device by which he does produce a tilting motion of the finger-beam; but his device in so different—his mechanism by which he accomplishes the result, so unlike that of Graham, that I think the two patents may possibly both stand. At any rate, I do not think that the device of Wemple anticipates the much more simple device of Graham. It is not necessary for me to go into an extended discussion or analysis of the peculiar mechanism by which Mr. Wemple proposed to secure this rolling or tilting motion in the finger-beam. It is enough to say that I find it sufficiently different from that of Graham to justify my conclusion that he has not so far anticipated Graham in the art as to defeat the Graham patent."

An examination of the Wemple patent shows that it does not contain any draft-rod or vibratable link, and but one swivel joint, and its finger-bar can only be raised and lowered *with* the frame. Hence, if it provide for a rocking motion of the finger-bar, it does not have Graham's *mechanism*, and so does not anticipate his claims in suit.

The actual date of Graham's invention was not shown in *Graham* v. *Gammon*, and there was no evidence whatever on the subject. For this reason the Wemple patent was

considered the same as if issued before such invention, and thus allowed its fullest possible effect as a ground of defense. But, as it now appears, not having been issued until more than three years after Graham's invention was completed, and more than fourteen months after Graham's application was filed, it must be considered as entirely excluded from the case.

We have now considered all of the patents introduced by the defendants. In each we find some essential feature of the Graham combinations lacking. In no one of them do we find all of the elements of the Graham first and second claims, combined, operating or accomplishing the objects and results intended and secured by the Graham combinations. To find a part in one and a part in another prior patent is insufficient. At least *one* exhibit, prior to Graham's invention, must be produced which shows substantially his combinations, produces substantially his results, in substantially the same way, before the defendants can possibly claim to have anticipated the Graham patent.

As said by this court in many cases, and as well expressed in *Imhaeuser* v. *Buerk* (101 U. S., 660):

"Before entering upon a separate examination of these several patents it is proper to remark that it is not pretended that any one of them embodies the entire invention secured to the complainant in his letters patent. Nothing of the kind is pretended, but it is insisted that each contains some feature, device or partial mode of operation corresponding in that particular to the corresponding feature, device or partial mode of operation exhibited in the complainant's patent.

"Suppose that is so, still it is clear that such a concession cannot benefit the respondent, it being conceded that neither of the exhibits given in evidence embodies the complainant's invention or the substance of the apparatus described and claimed in his specification. Where the thing patented is an entirety, consisting of a single device or combination of old elements incapable of division or separate use, the respondent cannot escape the charge of infringement by alleging or proving that a part of the entire invention is found in one prior patent, printed publication, or machine, and another part in another prior exhibit, and still another part in a third

exhibit, and from the three or any greater number of such exhibits draw the conclusion that the patentee is not the original and first inventor of the patented improvement. *Bates* v. *Coe*, 98 U. S., 31, 48."

We therefore submit and insist that the first two claims of the Graham patent in suit are not anticipated by any or all of the various patents introduced and relied upon by the defendants.

For the sake of convenience in understanding the relevancy of these various patents as defenses, we here divide them into two classes—those issued before and those issued after Graham's invention.

Before the Graham invention.—The Haines of 1855; the Dolph of 1857; the Aultman of 1858 and 1859; the Stetson & Maynard of 1859; the Zug of 1859; the Ball of 1859; the Bartlett & Dodge of 1862.

After the Graham invention.—The Dodge of 1865; the Ray & Grant of 1865; the Bramer of 1865; the McCormick & Erpelding of 1867; the Wemple of 1867, and the Graham of 1867.

Of course, only those issued before the Graham invention have any relevancy as defenses.

Before leaving this branch of the subject we also desire to quote the language of Judge Blodgett in *Graham* v. *Plano Co.* (33 Fed. Rep., 918), which expresses the conclusion to which he came when he was called upon to again consider the Graham patent, after more than ten years had elapsed since his first decision, and after thirteen years of litigation had brought to the surface everything that could be discovered, and after counsel had thus had the benefit of the researches of numerous defendants which had completely explored and illuminated the prior art. He said:

"In regard to all the testimony in this case illustrating the state of the art in the field to which the complainant's invention belongs, both that which has been passed upon in the former cases and that which is brought forward for the first time in this case, it may be said that a review of this proof, in the light of what Graham did, shows that several inventors who

preceded him in point of time, groped about or approximated to his device, and it is now comparatively easy, with the Graham machine before us, to make a Graham machine out of several of these older efforts in that direction; but the fact seems to me to remain unshaken by the proof in this case, as it did in the former cases, that none of them accomplished the result obtained by his invention, or made a machine organized and intended to secure that result by the means which he adopted and described. In other words, Graham seems to me to have been the first to embody, in a practical working machine, the device covered by his patent. A mere mechanic with a Graham machine before him may, without invention, now so alter and improve some of the clumsy attempts at the same object in the older art as to make these machines do what Graham's machine does; but they need the instruction of the Graham device to make these old machines a success. Graham achieved success, while his predecessors in the field had failed."

THE QUESTION OF INFRINGEMENT.

In his specification, just before the claims, Graham says:

"Having thus described a machine embodying all my improvements, I declare that I do not limit my new combinations to the particular forms represented in the drawings, but intend to vary the form and construction of the members of the combinations, or to use equivalent members in their places, as circumstances may render expedient."

The effect of a clause like this, standing in the same position in a patent, is thus stated by Judge Brown in *La Rue v. Western Electric Co.* (28 Fed. Rep., 89):

"If this clause had *followed* the four items specifying his claim, no one would have seriously contended that it was not a part of the claim and applicable to a sounder. This clause immediately precedes the words, 'I claim,' and shows conclusively what is intended to be included in the claim and the patent. I see no good reason for any different construction, simply because this clause precedes those items instead of following them. The intent is equally clear in either case, and in either the clause should therefore be regarded as a part of the claim and as explaining its meaning, application and extent. This part of the claim stands precisely as it was in the original application. No objection was taken to it in the Patent Office. There is no reason, therefore, to suppose that a more limited patent was intended by that Office, since the inventor's intent is perfectly clear."

As already shown, Graham's position in the art was such that, if necessary to invoke the doctrine of equivalents, there

is no doubt about his right to do so, and this even on a limited construction. This has already been expressly recognized by Judge Blodgett and Judges Drummond and Dyer. For instance, in *Graham* v. *Gammon* (3 Banning & A. 11,) Judge Blodgett, in considering the Sprague machine, said:

"I think that the evidence shows Mr. Graham to be the first who has really accomplished this desirable tilting or tipping motion successfully, by the simple mechanism which he shows in his drawings and patent. . . . It [the defendant's bar] does not roll or tip so much as Graham's finger-bar, but it is the same motion, although less in degree, and I am very clearly of the opinion that the device is essentially the same . . . I must say that I think the patentee, or whoever prepared the specifications in the Graham patent, is a little unfortunate in the choice of terms by which he describes his mechanism. In one sense there is no swivel joint here in the defendant's machine. That is, it is not technically a swivel joint, and especially the draft rod is not connected to the vibratable link, by what is strictly called a swivel joint. It is a mere hook, but it performs all the functions of Graham's draft rod and swivel joint, and must be considered the equivalent of Graham's device in that particular. It is nothing, after all, but an equivalent mode of producing the same result."

In *Graham* v. *Geneva Lake Co.* (11 Fed. Rep., 147) Judge Dyer said:

"The mechanism of the two machines in various particulars is quite unlike in form, and this dissimilarity is more apparent from the fact that defendant's machine is one where the cutting apparatus is forward of the axle and wheel; but, as before stated, Graham provides in his specifications for a device as applicable to a forward cut as to a rear cut machine. Upon a careful consideration of the question, I am of the opinion that the differences between defendant's and complainant's machines are differences of form and not of substance, and that defendant's machine really shows the various parts described in complainant's patent."

In both these cases the propriety of a liberal construction, covering "equivalent modes of producing the same result," was recognized; but in the present case the infringement is so clear that the question whether the patent can properly be construed to cover equivalents is immaterial. If the claims sued on cover anything at all, that thing is certainly found in the defendants' machine.

Judges Drummond and Dyer, in considering the question of infringement, as presented in the McCormick machine, said:

"The defendant's machine has the swivel joint attached to the frame, the vibrating link in the same form as the plaintiff's and the draft-rod attached forward in substantially the same way as the plaintiff's, but, instead of having a swivel joint at M', as stated in plaintiff's machine, forward of the shoe, the draft-rod has a swivel joint at the rear end of the shoe, and there is an arm attached to a part of the vibratable link substantially like that of the plaintiff's; and the substantial difference, as it seems, between the plaintiff's device, as described in the first and second claims, and that of defendant's is, that the draft-rod is attached to the rear part of the shoe, and not to the forward part, as in plaintiff's patent. There are also other devices in the defendant's machine which may make it different from the plaintiff's, but as to the swivel joint, the vibratable link, and the mode in which the motion is produced in the finger-bar, there does not seem to be much difference in substance, and in both machines, and by substantially the same means, there is produced a rocking motion. . . Then, from what we have said, we do not see that there can be any substantial difference between the combination, as described in the plaintiff's machine, of the swivel joints, draft-rod and vibratable link with the frame and shoe and finger-bar, and that of the defendant's machine. The differences which have been stated between the two machines in this respect do not constitute any difference in principle. The one is substantially the same thing as the other. The additions which have been made to the defendant's machine, such as the device by which the pressure of the cutting apparatus upon the ground is regulated, and the other devices which have been made, do not affect the combination as claimed in the plaintiff's machine. The attachment of the draft-rod to the rear part of the shoe instead of to the front part, which is substantially the only difference that there seems to be in the mode of construction, cannot constitute a difference in principle, and cannot prevent the defendant's machine from being an infringement of the plaintiff's patent. It may be said that there are differences also between the defendant's machine and that of the plaintiff in the manner in which the arm is attached to the vibratable link, and also as to the mode in which the force applied to the arm may operate upon the finger-bar, but these are differences of form and not of substance." (Record, 51-3).

That the conclusions of Judges Drummond and Dyer quoted above are sound, and that the defendant's machine clearly infringes the first and second claims of the Graham patent, will be apparent from a comparison of the elements

entering into the combinations of those claims with the corresponding elements in the defendant's machine.

Graham's first claim calls for:

(1) *A finger-beam.* The defendant's machine has one.

(2) *A gearing carriage.* The defendant's machine has one.

(3) *A vibratable link.* The defendant's machine has one, of the exact form as that of the Graham patent,—forked, so as to embrace the inner shoe of the cutting bar at both its front and rear ends, and thus brace it to the greatest extent against the strain on the cutter-bar, in mowing.

(4) *A draft-rod.* The defendant's machine has a draft-rod which draws the finger-beam or cutter-bar forward, and performs precisely the same office as the draft-rod in the Graham patent.

(5) *A swivel joint M,* connecting one end of the vibratable link with the frame of the machine. The defendant's machine has a ball and socket joint for the same purpose and at the same place; and ball and socket joints are well known equivalents for swivel joints, for securing a two-way motion, and were so known and used at the date of Graham's invention. This ball and socket joint, like the Graham swivel joint M, permits the outer end of the vibratable link to rise and fall and turn with the rocking of the finger-beam.

(6) *A swivel joint M',* connecting the rear end of the draft-rod to the shoe or vibratable link. This joint, as shown and described in the patent, contains two axes—one parallel with, and the other transverse to the finger-beam. Without the joint containing both of these axes, the finger-beam could not rise and fall at either end, and rock forward and backward. The axis of this joint, transverse to the longitudinal axis of the finger-beam, serves to hinge the inner shoe of the finger-beam to the forked end of the vibratable link. This should be particularly understood. The other axis of this joint—the one which is parallel to the longitudinal axis of the finger-beam—permits the rocking of

the finger-beam forward and backward. The defendant's machine has a joint connecting the rear end of the draft-bar with the inner shoe of the finger-beam, containing the two axes described in the Graham patent—one of them transverse and the other parallel to the longitudinal axis of the finger-beam. The axis of the joint which is transverse to the longitudinal axis of the finger-beam serves to connect the rear ear or lug on the shoe to one member of the vibratable link, while the axis which is parallel to the longitudinal axis of the finger-beam connects the rear end of the draft-bar to the extending end of the transverse axes. This joint, in the defendant's machine, is exactly like the joint M′ of the claims. Its two axes are the same in direction, permit the same motions of the finger bar, and perform each and every office of the corresponding axes in the joint M′. In a word, these two axes in this joint of the defendant's machine—the one parallel and the other transverse to the finger-beam—permit the finger-beam and vibratable link to rise and fall and rock in the same manner, for the same purpose, and with the same result that the corresponding axes of the Graham swivel joint M′ permit the finger-beam and vibratable link to rise and fall and rock. But, as stated by Judges Drummond and Dyer, this joint is placed at the rear instead of at the front end of the inner shoe of the finger-beam, as shown and described in the Graham patent. In other words, the defendants have extended their draft-bar so as to carry it over the shoe and attach it to the rear instead of to the front end. But this change, as said by Judges Drummond and Dyer, "cannot constitute a difference in principle, and cannot prevent the defendant's machine from being an infringement of the plaintiff's patent."

(7) In addition to these elements, which form the combination of the first claim, the defendants also use an arm or lever to enable the driver to raise the points of the

guards, or let them drop whenever it is desirable to control their position and operation.

In addition to these considerations, the defendant's own description of their machine in the patent to L. J. McCormick and others, of July 31, 1877, clearly shows that it contains the Graham inventions. In reference to this patent, No. 193,770, Mr. Graham says:

"It shows and describes a machine manufactured by these defendants—the machine now in suit.

"Q. 64. Do you mean the machines manufactured by the defendants which the court has held to be an infringement of your first and second claims? A. Yes; it is pretty near as accurate as a photograph, so far as the drawings are concerned." (Record, 189).

The specification of this patent says:

"The rear end of the drag-bar is bent inward and downward (Figs. 1 and 2), a sufficient space being preserved beneath it to allow the shoe and its joints to play freely, and terminates in a laterally projecting pin *h'* which enters a socket in a swivelling eye-bolt *a*, on the rear end of the shoe, and forms the pivot on which the shoe, and consequently the finger-beam, rocks.

"The shoe G is also provided in front and rear with lugs *g* and *g'*, to which are respectively pin-jointed the front and rear members of a forked coupling arm J, the swivelling eye-bolt *a* forming the pivot of the rear member. The end of this coupling arm is bent or curved like a 'goose neck' to pass over the crank shaft, and terminates in a ball *j*, working in a socket, *j'*, in the crank box casting, the socket being covered by a cap, j^2, thus forming a ball and socket joint which allows the finger-beam to rise and fall and to rock freely without cramping." (Record, 231).

"The cutting apparatus may be rocked on its swivelling pivot joint, and held in any desired position to adapt it to rough as well as smooth land, by means of a rocking lever N, pivoted to the drag-bar and extending to within convenient reach of the driver, the lever being provided with a spring detent N', taking into a curved rack O, also mounted upon the drag-bar." (Record, 232).

From a copy of the file wrapper and contents of this McCormick patent it appears that when the application was first filed a claim was made as follows:

"2. The combination, substantially as hereinbefore set forth, of the drag-bar, the shoe and the swivel pin forming the joint between the two, whereby

the drag-bar sustains the strain on the shoe, while leaving it free to rock on its hinges." (Record, 282).

This claim was in the application as originally filed by the McCormicks, but the Office wrote them Oct. 7, 1875, in reference to it, saying, "The second and third are met in the patent of Graham, Feb. 11, 1868, No. 74,342." (Record, 284).

On Nov. 13, 1875, the McCormicks wrote the Office, erasing the original second claim and submitting the present second claim of the patent. The second claim, as thus submitted and allowed, reads as follows:

"2. The combination, substantially as hereinbefore set forth, of the shoe and the drag-bar extending over and in rear of the shoe and its swivelled pin connecting it with the rear end of the shoe, whereby the drag-bar sustains the thrust of the shoe, while leaving it free to rock on its hinges." (Record, 233).

The fifth claim, which introduces the lever and describes its operation, is as follows:

"5. The combination, substantially as hereinbefore set forth, of the shoe, the forked coupling arm, the drag-bar extending over and in rear of the shoe, the swivelled pin connecting the two, the rocking lever and the detent mounted on the drag-bar, and the adjustable link connection between the lever and coupling arm, whereby the shoe readily may be rocked or adjusted." (Record, 233).

The seventh claim reads as follows:

"7. The combination, substantially as hereinbefore set forth, of the shoe, drag-bar, the forked coupling arm, the overhanging bracket on the frame, the adjustable spring tension link connecting the bracket and the rear member of the forked coupling arm, and the chain, link and lifting lever acting on the front member of the coupling arm, whereby the shoe is first rocked and then lifted by one continuous movement of the lever." (Record, 233).

The statement in the second and fifth claims above quoted about "the drag-bar extending over and in rear of the shoe," was inserted by the McCormicks in their letter of Nov. 13, 1875, after some of their claims had been rejected on the Graham patent in suit; and, as shown by the proceedings

in the Office, it was an after-thought. It is the only distinction they could make between their combination and Graham's claims, and it was introduced merely for the purpose of securing an allowance. If it was considered a material feature, why was no importance attached to it in the first instance? It is a difference that Judges Drummond and Dyer well say "cannot constitute a difference in principle, and cannot prevent the defendant's machine from being an infringement of the plaintiff's patent." (Record, 53). This statement seems so obvious that we deem it unnecessary to add to or enlarge it.

We therefore submit that the defendant's infringement of the first and second claims of the Graham patent is fully and clearly made out.

THE QUESTION OF PARTIES.

It was objected in the court below, and probably will be here, that William B. and Cyrus A. Werden have an equitable interest in the patent in suit, and hence should be joined as parties complainant in the bill. This position is based on the theory that the contract made between Graham and the Werdens, Nov. 25, 1865, and recorded Feb. 28, 1870, (Record, 340) is still in force. The object of this agreement was to provide for the manufacture and sale of the patented machine, and the consideration was that each of the parties should have an interest in the profits arising therefrom. The agreement required the Werdens to manufacture fifty machines in 1866, and one hundred in each succeeding year, but provided that the business might be discontinued at any time by a majority of the parties, by giving ninety days notice to the others. In case of such a discontinuance, however, it was provided that—

"The said party of the second part [the Werdens, shall], before the time of discontinuance, assign to said party of the first part, in due form of law, any and all right, title and interest, which the said party of the second part may, at the time, have in and to said invention for said machines, and any

improvement thereon and thereto, made by said party of the first part, and coming within the terms of this contract, by virtue of any patent or patents or otherwise." (Record, 342).

In a preceding clause it is provided:

"That the party of the second part shall have no interest in any invention of the said party of the first part *after* this contract shall cease to be in force, by any reason whatever." (Record, 341).

The contract also contains the following provisions in reference to the sale of shop rights, namely:

"In case any patent may be obtained for said machine, or for any improvements thereon or thereto by the said party of the first part, territorial or shop rights to use the same may be sold and granted by the parties hereto, as is hereinafter provided. . . . No sale of any part or right of said invention shall be made by either party *without the written consent of all the others*, and when any sales are made, the profits arising therefrom shall be divided as before mentioned, as in case of any other profits." (Record, 340-1).

The evidence shows that in 1866 the Werdens built but eight or ten machines, instead of the fifty the contract called for. In 1867 they manufactured only twenty-five machines, and in 1868 only thirty, but, as before, a part were too late for the harvest in each of these years. After notice from Graham that he should insist on their building the full number required by the contract, they made one hundred, getting them out in 1869. They refused, however, to put them on the market by advertising, or to send any of them away, except in two instances. These were the only machines ever built under the contract. (Record, 138-9).

In August, 1869, the parties had a violent disagreement, arising out of the refusal of the Werdens to build the number of machines required by the contract for the coming season. This disagreement continuing, and the Werdens persisting in their refusal for several weeks, Graham finally declared their contract at an end, which, under the circumstances, he was entitled to do. The deposition of James B. Welch (Record, 146) fully shows the

violence of the disagreement and the position the Werdens assumed. Graham also told the Werdens that, on account of their failure to carry out the contract, he would never assign them any interest in the patent now in suit. The Werdens consenting to have the contract thus ended, said, among other things, "that Graham might go on and get up another company," or do whatever else he pleased. In the winter of 1871–2 they sold out their shop. (Record, 138–9).

In August, 1870, Hugh Graham, now deceased, for whose estate the appellee is administrator, purchased the patent now in suit, with two others, for four hundred dollars and other considerations; and immediately afterwards published a notice of his purchase in the Lake County Patriot, the local paper taken by both of the Werdens. (Record, 142). This purchase was made in good faith, and after the complainant had been fully informed of the Werdens' refusal to carry out their part of the contract.

Late in 1874, after sending A. B. Graham to Rhode Island to see the Spragues, Hugh Graham commenced the suit against *Gammon et al.* for infringements by sales of the Sprague machine. Altogether this suit was pending about three and one-half years, and cost the Grahams over a thousand dollars. This expense, as well as that of the trips and all other expenses connected with the patent, was borne by the Grahams, the Werdens never offering or being called upon to pay a farthing.

During all this time the Werdens remained silent, treating the contract as rescinded, and never claiming any interest in the patent, or objecting to any proceedings by Hugh Graham. Nor does it seem ever to have occurred to them that they might claim an interest and thus get something for nothing, until the appellants in this case raked up the old contract and instigated them to set up a claim, in the hope that in the ensuing confusion they might escape their own liability on technical grounds.

In April, 1878, the Werdens sold a shop right under the 1867 patent which had been issued to them jointly with Graham, which Charles Collahan, in the employ of appellants, purchased for fifty dollars, the purchase being made in the interest of appellants, for whom Collahan was acting. At the time of this purchase, Collahan was shown the contract and fully informed of all the facts connected with the Werden transaction. The proceeds of this sale, which was made without Graham's consent or knowledge, were appropriated by the Werdens, and no part was ever paid or offered to Graham. Collahan immediately executed an assignment to the appellants. (Record, 159-60).

From this brief summary of the evidence on this subject it is clear that the contract is not now in force, but was rescinded, first, by Graham and all the parties; second, by the long failure of the Werdens to perform their part of it; third, by the sale of their shops and their consequent inability to perform their part; fourth, by their laches in asserting any claim while the complainant was spending large amounts of money in making the patent valuable; and fifth, in the unauthorized sale of the shop right to Collahan.

In this view, the claim that appellants are entitled to any consideration on account of a supposed shop right or license is wholly unfounded. By its terms this shop right *is limited to* the 1867 patent—and in no way relates to the 1868 patent, the one in suit—and cannot operate as a *release for* past infringement; but even when thus limited, it is of no force or validity, for, at the time of purchasing it, the defendants had notice of the complainant's title and the Werdens' inability to sell, from three sources: 1. From the records of the Patent Office. 2. From the notice published in the Lake County Patriot; and 3. From the actual knowledge of Collahan at the time of his purchase.

Judges Drummond and Dyer, in considering this matter in the court below, said:

"On the 25th of November, 1865, A. B. Graham, the inventor, made a contract with W. B. and C. A. Werden that they should have the exclusive right to manufacture and sell the improvement in the machine, and that that right should continue until the patent about to be applied for expired; and Graham agreed that before the letters patent should issue for the invention he would make such necessary assignment, that the patent might issue to all the parties jointly, each to have an undivided one-third interest therein. It will be observed that this is not of itself an assignment, but only an agreement to assign.

"On the same date that this contract was made, what purported to be an assignment, was executed by Graham. It stated that, whereas Graham himself and the Werdens had agreed to purchase from Graham all the right, title and interest which he had in the invention, through the grant of the letters patent therefor, therefore he, Graham, assigned to himself and the Werdens the full and exclusive right to said invention, of all the improvements made by him, as fully set forth and described in the specification which he had prepared for the purpose of obtaining a patent. The circumstances connected with the application and obtaining the respective patents have been already stated. On the 23rd of July, 1867, in pursuance of the contract and assignment, already referred to, letters patent were issued to Graham and the Werdens. That patent is not the subject of controversy here. On the eleventh of February, 1868, a patent was issued which included the two claims in controversy here, to A. B. Graham alone.

"It is claimed by the defendants that these facts show that A. B. Graham could not assign to the plaintiff a right to enable him to maintain this suit in his own name on the patent of 1868. The evidence tends to show that a controversy arose between A. B. Graham and the Werdens as to the contracts of Nov. 25th, 1865. The former insisted that the Werdens had not complied with their contract, and from that or some other cause, there seems to have been no additional assignment made to the Werdens of any interest in the patent of 1868, and as already stated, that patent was issued to Graham alone. We think that upon this state of facts, there being no controversy about the validity of the assignment by A. B. Graham to the plaintiff of the patent of 1868, that the plaintiff must be considered as having the legal title to that patent, and, consequently, has the right to maintain this suit in his own name. Whatever equities there may be between the parties to the contract of November, 1865, can be adjusted, in a controversy between themselves, or their legal representatives. We do not think that the defendant can claim that the facts stated constitute a defense to this action."

Afterwards, and on the 25th day of October, 1881, the

Werden's filed a bill in the Superior Court of Cook County, Illinois, against Hugh Graham and A. B. Graham, on the contract of November 25, 1865, to compel an accounting and an assignment to the Werdens of a two-thirds interest in the patent of 1868. This bill was demurred to, and the demurrer sustained, and the Werdens appealed to the Supreme Court of Illinois. That court, in 107 Illinois Reports, 179, affirmed the decision of the court below, holding that the Werdens could not compel an assignment of any interest in the 1868 patent or a specific performance of the contract, and that their only remedy, if they had any, was in a court of law. In closing their opinion, the Supreme Court of Illinois said:

"Whether appellants shall be able to show a sufficient reason for their own failure to comply with their contract, will be left to be determined by the court of law, where they must seek their remedy."

In view of all these considerations—the failure of the Werdens to perform their part of the agreement, the stipulation in the agreement that the invention should belong to Graham on a termination of the contract, however it might be terminated, his long assertion of right in defiance of any claim of the Werdens, their long neglect to set up or insist upon any claim, and the decision against them by the Supreme Court of the State of Illinois, on a bill directly filed to enforce their rights—we submit and insist that the objection that there is a defect of parties complainant cannot be sustained.

THE PETITION FOR A REHEARING.

After Judges Drummond and Dyer had announced their decision in favor of the complainant, March 13, 1880, the defendants filed a petition for a rehearing. This petition, and the affidavits in support of it and in opposition to it, are found on pages 20 to 46 of the Record. This petition was for a rehearing and "that the cause may be re-opened for taking further testimony." The affidavits and new mat-

ters were argued fully and at great length, before Judges Drummond and Dyer and taken under advisement, and the petition for a rehearing was afterwards overruled. (Record, 53). As we understand the practice, such petitions are addressed to the discretion of the court, precisely as are motions for new trials in action at law. They may grant them, or refuse them, and their action in either case is not open to review in this court.

In *Pomeroy's Lessee* v. *Bank of Indiana* (1 Wall., 597) this court said:

"Authorities are numerous that a motion for a new trial in the Federal Courts is a motion addressed to the discretion of the court, and that the decision of the court in granting or refusing it is not the proper subject of a bill of exception. *Henderson* v. *Moore*, 5 Cran., 11; *Mar. Ins. Co.* v. *Young*, Id. 187; *McLanahan* v. *The Universal Ins. Co.* 1 Pet. 183; *U. S.* v. *Buford* 3 Id. 32; *Barr* v. *Gratz*, 4 Wheat., 213; *Blunt* v. *Smith*, 7 Id. 248; *Brown* v. *Clarke*, 4 How., 4. Indeed, the universal rule of practice is, that matters resting entirely in discretion are not re-examinable in a court of errors, and there can be no departure from that rule in this court without overruling its settled practice from the organization of the court to the present time. Presumption, therefore, in this court is that the motion for new trial was properly denied."

Under these decisions, and numerous others of like import that could be cited, we submit that the petition for a rehearing and the affidavits in support of and against the same, as they can not be considered here, form no proper part of the record and should not have been certified up by the clerk. Although they were fully argued in the court below, they failed to convince Judges Drummond and Dyer that they were sufficient to change or affect the conclusions to which they had arrived. They certainly can be made no ground for reversing their decision, under the authorities, and we therefore dismiss them without further comment.

THE QUESTION OF DAMAGES.

After Judges Drummond and Dyer overruled the defendant's petition for a rehearing, in April, 1882, the case was referred to Henry W. Bishop, Esq., Master in Chancery, to assess the complainant's damages. The case was pending before the Master more than two years, and a large amount of evidence was taken on the part of both the complainant and defendants. This evidence exhibited all of the transactions or dealings which had ever been had under the patent in suit, so that everything that would enable the Master to arrive at an intelligent conclusion as to the amount of the complainant's damages was before him.

On July 21, 1884, the Master reported that the defendants had manufactured and sold and should account for twenty-seven thousand two hundred (27,200) infringing machines. He referred to the evidence on the part of the complainant tending to show that the defendants had manufactured and sold and should account for thirty-two thousand three hundred eighty-two (32,382) machines. He then said:

"But as there is some conflict in all of this testimony, and as the defendants should not be charged with more machines than are definitely shown to have been manufactured and sold by them, and with a view of relieving this question of every possible doubt, I have relied entirely upon the information furnished by the defendants themselves, and have charged them only to the extent of their admissions." (Record, 60).

After stating that the complainant insisted that interest should be allowed from the time of the infringement, or rather from the end of each year in which sales were made, respectively, and declining to adopt such rate of interest, the Master said:

"But I find that interest should be allowed at the rate of six (6) per cent per annum upon the sum herewith reported from the date of the announcement of the decision of the court establishing the rights of the complainant, to wit, the thirteenth (13th) day of March, A. D. 1880, from which time com-

pensation for the alleged unauthorized use is shown to have been deliberately withheld from the complainant."

The complainant excepted to the Master's report, because it charged the defendants with only 27,200 machines, instead of 32,382 machines, and because interest was not allowed from the end of each year's infringement.

The various exceptions filed by both the complainant and defendants were argued before his Honor, Judge Gresham, on the 14th and 15th days of April, 1885, and on the 27th day of April the court entered a final decree, overruling all of the complainant's exceptions, and changing the allowance of interest, so that it was computed from the date of the Master's report—July 21, 1884—instead of from the date of Judges Drummond and Dyer's decision—March 13, 1880. The decree, as entered, amounted to eighty-five thousand three hundred fifty-three dollars and sixty cents ($85,353.60). The defendants appealed from this decree, and, the case being before the court, either party may, as we understand it, urge the correction of any errors in the decision of the court below.

As stated in the commencement, we consider that the Master and the court erred in not including a greater number of machines in the account, and in the matter of interest, and we will proceed to a consideration of these errors before setting forth our reasons why the decision of the court below as to the rate per machine was as favorable to the defendants as they are in any possible view entitled to.

But as preliminary to a consideration of these main questions, it is proper to again suggest that the patented invention was made at an early date—the winter of 1862-3—and that in making it Graham was the first to provide for the raising, lowering and rocking of the finger-beam of a harvester, independent of the main frame, and without the intervention of an under or supplemental

frame, and for a self-adjusting or automatic rocking motion of the finger-bar, that would enable it to conform to the irregularities of the surface of the ground, and cut fallen, lodged or tangled grass. Dispensing with the under or supplemental frame, the Graham invention provided for accomplishing the raising, lowering and rocking movements of the finger-beam, and independant of the main frame, by means of a light and simple mechanism, namely, an intermediate or vibratable link, a draft-rod or drag-bar, two swivel joints, and an arm or lever for controlling the movements of the finger-bar, whenever desired. This arm or lever is only used occasionally, and is not an element of the first claim, but of the second, the first claim having special reference to the automatic rocking motion, and the second to the controllable rocking motion. The importance of the invention, as admitted by the defendants themselves, will be referred to presently.

It is also proper to suggest that defendants' infringement was committed deliberately, with a full knowledge of the complainant's patent, and in the most open disregard and defiance of his rights. The evidence shows that Graham's machine was manufactured and sold at Waukegan, some thirty-five miles from Chicago, for a number of years before the defendants' manufacture, complained of, began. In view of the sharp competition with which defendants were constantly engaged with other manufacturers, and of the keen eye for changes and improvements that they have always had, it is not possible that they could have been ignorant of the existence of the complainant's machine, or of the manner of its construction and operation. But, without regard to this, the evidence shows that, not to speak of the beginning of this suit, the defendants had direct and personal knowledge of complainant's patent, from at least two sources—personal interviews with the patentee, Graham, and letters from the Patent Office. Mr. Graham called on

the defendants many times from 1869 to 1873, in reference to his inventions; his last call was in 1873, and in 1874 they had his machine on the market. Mr. Graham, in speaking of his calling on the defendants, said:

"In September, 1869, I think it was, I had one of my machines on the corner of West Lake and Jefferson streets. I went to the defendants' works, on the North Side at that time, with a view of getting them to look my machine over. I thought I had something that might attract their attention. At that time they informed me—I can't say whether that is the gentleman I met, this is the first time I ever met him, Mr. L. J. McCormick—they informed me they had as good machines as the market afforded, and they did not care to look at my machine, though if I would haul it down to their works they would look it over. I thought the prospect so slim that I did not haul it over there. Again, I think in the winter of 1871 and 1872, I called at Mr. L. J. McCormick's residence in the evening—a party by the name of Streeter went with me—and tried to get his attention to some features of my invention. I called there, I guess, two or three times in the evening. Mr. McCormick was very busy at that time building their works, and it was almost impossible to see him excepting in the evening, and I had a number of interviews with him in relation to that subject, and finally, after they had got into their new works and was running their business there, I called several times. The last interview I had with Mr. Leander J. McCormick was at their office at the works, and he told me when I got ready to take about the price of a dead horse for what I had, to come to see him. I never went up." (Record, 206).

Although the defendants examined many witnesses after this testimony by Mr. Graham, and although Mr. L. J. McCormick himself was afterwards on the stand as a witness, not one word of denial or explanation of this testimony and of Mr. McCormick's arrogant and insulting suggestion was ever offered. It stands on the record unexplained and uncontradicted. It exhibits in remarkable manner the lordly and overbearing attitude assumed by the defendants to Mr. Graham, the poor and struggling but meritorious inventor.

In October, 1875, their attention was again directed to his patent by an official letter from the Patent Office (Record, 284), and early in June, 1877, this suit was commenced against them.

Notwithstanding all of these direct sources of notice and

information of Mr. Graham's patent, they went right on, deliberately, wilfully infringing, as long as they personally continued in business, and never recognized the patentee's rights. They continued their infringement for more than two years after the beginning of the suit, and during that time sold, as appears from their own statement of sales, for the years 1878 and 1879, more than 9,000 infringing machines. Under such circumstances, it is at least a serious question whether the defendants should not be held liable in punitive damages.

It may also be here stated, that the general question of damages under the two claims now in controversy has been the subject of litigation in another case. On full argument of exceptions to a Master's report allowing five dollars a machine, Judge Dyer, who had previously participated in the hearing and decision of this cause, awarded the complainant damages at the rate of three dollars a machine and interest. But, knowing the conduct and position of these defendants, Judge Dyer was careful to place his decision on grounds that would measurably prevent their using it as a precedent in their favor, and so, in reducing the amount reported by the Master, and in allowing the complainant but three dollars a machine, he stated that he took "also into consideration the fact that a large number of the machine in question were not manufactured by the defendant, but were purchased for sale from other manufacturers." (Record, 263).

He thus considered their purchase from other parties as a mitigating circumstance.

EXTENT OF INFRINGEMENT.

The accounting involves an inquiry into the defendants' manufacture and sales of infringing machines from 1874 to 1879, inclusive; and the first question is in regard to the number of infringing machines manufactured and sold dur-

ing these six years. The record shows three ways of getting at this fact—two being direct and positive, but disagreeing as to the number, and one being the result of mathematical computations, based on given facts. These three ways will be considered under the head of the "Hanna Statement," the "Franks Statement" and the "Mathematical Statement."

THE HANNA STATEMENT.

After the case had been referred to the Master, the defendants were requested to produce a statement showing the number of machines manufactured and sold by them coming within the decision of the court. On October 24, 1882, the parties appeared before the Master, and the defendants produced a statement prepared by the witness, William J. Hanna, who had been in the employ of the defendants for some thirty years, and who was pronounced by counsel for defendants as "conversant with the facts." (Record, 176). This statement covered the six years of the infringement—from 1874 to 1879, inclusive—and showed that the defendants had manufactured and sold 23,438 machines. (Record, 167). Mr. Hanna testified in reference to this statement in the most positive manner, that it was correct and covered all of the infringing machines, which he called the "New Advance." To show the unsatisfactory character of his testimony, and the inaccuracy of this statement, we here quote from his deposition:

"Q. 5. Were you familiar with its construction in 1874, and have you been familiar with it since that time? A. Yes.

"Q. 6. Do you know whether the defendants have manufactured any other machine than the 'New Advance' of the same construction, or whether they have called this machine by any other name? A. I know most positively there has been no machine of a like construction, nor this machine called by any other name, built since nor before 1874, except those named in that statement. It covers everything.

"Q. 7. You made this statement which has been made and produced in evidence here? A. Yes."

"Q. 9. Have you examined all of the books that would contain information in reference to any other of these matters; and if so, how thoroughly? A. I have examined all of the books that I required to examine in making up this statement, and I have done it as thoroughly as I could.

"Q. 10. How did you know what books to examine; from your own knowledge of the books or acquaintance with them, or from directions by any of the defendants? A. From my own knowledge. Of course, in a large office like this we are ready to assist in any case of that kind. I have had to get parties to bring books to me, and I have had to go down there, but I did it and it was my work.

"Q. 11. You say you examined every book that would give any information in reference to this subject, so far as you know? A. I say I examined every book I was required to examine.

"Q. 12. Are there any other books that would give any other information about the subject that you did not examine? A. There are not.

"Q. 13. Are the figures contained in this statement, as to the number of machines sold from 1874 to 1879, inclusive, correct? A. Yes.

"Q. 14. In every particular? A. Yes, sir.

"Q. 15. There can be no mistake about it, you are sure? A. I have said they are correct in every particular. I cannot make it more emphatic than that.

"Q. 16. Then the books have been kept in such form that there was no difficulty in getting accurate information, so that you now have no hesitation in saying that your figures are correct? A. I do not know just what you mean.

"Q. 17. (Repeated). A. I did not say there was any difficulty. I said it took a great deal of hard work and a good many days work. I think our books are admirably kept—with great system—and kept with a view of affording all information." (Record, 169-70).

The witness having mentioned a machine called "The Dropper," was asked:

"Q. 28. You speak of the 'Dropper;' was that an attachment put on to other machines? A. No, sir; it is a machine for reaping grain and laying it by a process called 'dropping' without going on the platform. It is dropped in rear of the machine; simply a plain reaper with this peculiar method of delivering the grain.

"Q. 29. Was not this peculiar method of delivering the grain applied to these machines called the 'New Advance' or machines like them in construction? A. No, sir; the method of delivering the grain by the 'Advance' was by means of a platform and raking off.

"Q. 30. Could you not leave off the self-raking platform and

attach this 'dropper' to the same machine, no other changes being necessary? A. When you attempt to make one change it always involves a great many more.

"Q. 31. Excepting that platform and self-raking apparatus, wherein was that machine different in construction from the one you styled 'New Advance?' A. It was a wholly different machine." (Record, 171).

"Q. 58. Was the machine which you have referred to as a 'Dropper' a one wheel machine or a two wheel machine? A. Two wheel machine.

"Q. 59. Do you know how it provided for the raking? A. It was a reaper—a fixed arrangement—and did not need a bar to rock." (Record, 173-4).

The examination of the witness being adjourned to the next day—October 25, 1882,—was continued:

"Q. 70. I also understood you to say yesterday that the 'Advance' machine was never used as a 'dropper,' as you expressed it? A. Yes, sir, I said so.

"Q. 71. This number you report, amounting to twenty-three thousand and over, does not include any 'droppers?' A. No, sir; it does not." (Record, 175).

"Q. 79. Have you ever personally had anything to do with the building of the machines? A. No, sir.

"Q. 80. And your only information in reference to their construction is that which you obtained in the office and from your position in connection with the books, papers, correspondence, and so on, is it not? A. Largely so, in connection with my acquaintance with the business generally. I do not pretend to be an expert." (Record 176)

From this testimony of Mr. Hanna, who was produced by the defendants as one "conversant with the facts," it appears that he really knew nothing about the construction of the machine involved in the accounting; that he was unqualifiedly positive that his statement showing 23,438 machines was correct in every respect and covered all of the machines for which the defendants should account; and that the machine called "The Dropper" was a wholly different machine from the "Advance" and was not included in the 23,438 machines which he reported.

Afterwards, and after the complainant had had the books examined and after Mr. Graham and Mr. Franks had testified—February 13 and 14, 1883—Mr. Hanna was

recalled, and testified as follows in reference to the "Droppers:"

"Q. 1. Have you made an examination of defendants' books since your last examination to determine the number of 'Droppers' made and sold by them from 1874 to 1879 inclusive? If so, please produce it. A. I have, and I now produce such statement, showing 4,262 machines sold in all during those years, but of those 4,262, I believe about 500 should be deducted as having been sold in the shape and form of plain reaping machines, leaving the net number 3,762. These 3,762 machines were omitted from the first account rendered by me, and I introduce this as a supplement to that account. These machines contain the same features, and are operated essentially in the same way as the machines contained in the first statement." (Record, 214).

It thus appears that Mr. Hanna's first statement, which he had testified so emphatically was correct, was not correct, and after complainant had discovered this he himself added to his former statement 3,762 machines, making in both reports 27,200 machines which the defendants admit having made and sold.

The defendants introduce no evidence whatever to corroborate the testimony of Mr. Hanna.

We submit and insist that the testimony of Mr. Hanna shows him to have been such an unreliable witness that his reports are wholly insufficient to show the *maximum* number of machines made and sold by the defendants. The court should not be bound by the disclosures of this interested, careless or ignorant witness, if the record furnishes other reliable testimony for ascertaining the number of machines actually made and sold.

THE FRANKS STATEMENT.

After Mr. Hanna had produced his first statement, and on Feb. 14, 1883, the complainants called Edward G. Franks, who testified that he was an expert accountant and had followed that business as a profession for the last five years, and more or less for the last twenty-five years. He stated that he had examined the books of the defendants for the

purpose of ascertaining how many machines they had made and sold during the years 1874 to 1879, inclusive.

"Q. 5. Look at these books now before you and state whether they are the ones you examined? A. Yes, sir; those are the books.

"Q. 6. Who furnished them to you for examination? A. The McCormick Harvesting Machine Company, corner of Dearborn and Randolph streets.

"Q. 7. What do these books show? A. They show the number of machines of the different kinds manufactured, shipped and sold, the agents' names that sold them, and the parties to whom they were sold," (Record, 211-12).

He then stated in detail for each year the number of machines made and sold during the six years of the infringement. Leaving out the single "Advance" reapers, which were not claimed to have been infringing machines, Mr. Franks showed the defendants had sold 17,560 "Advances," 11,002 mowers, 2,197 plain "Droppers," 1,049 double-bar "Droppers," 452 single-bar "Droppers," and 122 six-foot "Droppers," making in all 32,382 infringing machines sold by the defendants during the six years of their infringement. (Record, 212).

Mr. Franks also produced a statement showing the number of infringing machines that were sold in 1880 and 1881, but as those machines were sold by the McCormick Harvesting Machine Company, the successors of the defendants, they were objected to by the defendants' counsel and omitted from the case.

Mr. Franks was then asked:

"Q. 10. Do the numbers of the 'Advance' machines or mowers which you have given above exclude or include the machines shown by the books to have been double frame machines? A. It excludes them.

"Q. 11. Then it shows this number of machines of single frames to have been sold during the years stated? A. Yes; there are some double frame machines in 1874, running into 1875 and 6, which I do not take into account in this.

"Q. 12. Not included in the statement given? A. No, sir.

"Q. 13. State what they are called? A. D. F. [double frame] Mowers." (Record, 213).

From this testimony of Mr. Franks, who was a disinterested witness, and whose profession was that of an expert accountant, it appears that during the six years of the infringement the defendants sold 32,382 infringing machines. His testimony, given with the books before him, is not disputed in any way except by the witness Hanna, who was again placed on the stand by the defendants. The only explanation that he could offer to Mr. Franks' report of the number of machines, was to say that many of the "Advances" reported by Mr. Franks were double frame machines. Mr. Franks had positively testified that the double frame machines were so marked on the books, and that he did not include them. Mr. Hanna says that the books did not "always" observe this distinction, and that from "memory" he knows that several thousand of the "Advances" reported by Mr. Franks were double frame machines. We will quote his explanation.

Being called by the defendants, November 5, 1883, Mr. Hanna testified:

"There is nothing on the face of our account books which would indicate always whether a machine is single frame or double frame. These account books were not kept at the time with the fore-knowledge that Mr. Graham would be making any claim on the single frame as against the double frame. My memory is clear and distinct that the combined Advance machines built by the defendants in 1874 for the market of that year were all of the old double frame patents." (Record, 421).

Mr. Hanna says, speaking from his "memory," and saying that the books would not "always" indicate whether a machine was single or double frame, that Mr. Franks included 6,140 double frame "Advances," which would reduce Franks' statement to a less number of machines than his own. He does not dispute the statement made by Mr. Franks that the books *did* specifically show double frame machines, but simply attempts to evade the force of Mr. Franks' statement by saying that the books did not "always" observe that distinction, and that his "memory is clear and

distinct" that, in addition to the double frame machines shown by the books, Mr. Franks had included 6,140 double frames! Mr. Franks says positively that "there are some double frame machines in 1874, running into 1875 and 6, which I do not take into account in this case."

When we compare the position and the testimony of these two witnesses carefully, it seems to us impossible to doubt that Mr. Franks' testimony should be accepted in preference to Mr. Hanna's.

In the first place, Mr. Franks' statement is entitled to the greater weight because he was an wholly disinterested witness; Mr. Hanna was in the employ and under the direct influence, not to say control, of the defendants.

In the second place, Mr. Franks testified from the books and with them before him, while Mr. Hanna, in the points where he differs from him, testifies from "memory" merely; and there are various circumstances showing Hanna's "memory" to be unreliable, especially in regard to the account of machines manufactured. Thus, in his deposition taken August 11, 1879, he says he is "not aware that McCormick ever built a machine like" a model of their "Advance" mower then shown him, and which had been made and produced by the defendants themselves. (Record, 312).

How does this statement, made after the defendants had been infringing six years, and while they were still infringing, and while everything was recent and fresh, tally with his present statement that his memory is "clear and distinct" as to the construction of machines built nine years ago, and long since out of existence?

The correctness and reliability of his "memory," particularly as to the exact construction of the defendants' machine, is further shown from the fact that he purposely omitted the "Droppers" from his first statement, and in his first deposition stated positively, as already quoted, that they were a "wholly different machine;" while afterwards,

in his next deposition, admitting this to be a mistake, he states that "these machines contained the same features, and are operated essentially in the same way as the machines contained in the first statement."

And equally unreliable is his "memory" in reference to the machine called the "Prize" mower. Being asked about this mower, in connection with his first statement, he replied that he "did not come prepared to answer these questions about other machines;" that he believed the defendants discontinued manufacturing it in 1875 (Record, 171); and that, although it had a family likeness to the "Advance," it was a different machine, inasmuch as "one had a double frame and one a single frame." (Record, 174). But, by some wonderful process, his "memory" was greatly refreshed and strengthened by a night's rest, or the suggestions of some one "conversant with the facts," for the next day he testified that the name "Prize" mower was used "up to 1878" (Record, 174), and that the first column of his statement entitled "Plain Mowers" contained "Prize" mowers and nothing else—a statement which showed that some eleven thousand machines, which he testified the day before were double frame machines, were single frame machines and included by him in the account. (Record, 175).

In addition to all this, Hanna says that he is not an expert (Record, 176); that he has not examined any of these machines for many years (Record, 176); that he never had anything to do personally with the building of them (Record, 176); and that he testifies from his "general knowledge of the machines and business" (Record, 176), and "not on any acquaintance with machines derived from handling or building them."

The question here suggests itself: Why have the defendants thus attempted to contradict Franks by a witness who testifies from "memory," based on "general knowledge" merely, and this, too, without supporting him by additional

testimony or by a single corroborating circumstance? The fact that they have not produced witnesses conversant with the machines now claimed to have been double frame machines is certainly significant.

But there is another material circumstance to be considered in this connection. When making his examination, Franks' attention was directly called by Mr. Hanna to the matter of the double frame machines, and finding them entered "double frame" on the defendants' books, he excluded them from his statement. But, to meet this new difficulty, it is now said there is nothing on the face of the books which would "always" indicate whether a machine is single frame or double frame.

Mr. Hanna stated in his first deposition that the books were "admirably kept—with great system—and kept with a view of affording *all* information." (Record, 170). And as the books themselves contain entries designating machines as double frame machines, we submit that but little weight should be given to the suggestion advanced by Mr. Hanna to break the force of Mr. Franks' testimony, that the books do not always "distinguish between double and single frames." If some of the double frames were entered as double frames on the books, the only reasonable presumption is that they were all so entered. Mr. Hanna did not keep the books; he did not make the entries, and he should not be allowed to impeach the correctness and reliability of books which he did not keep, and which, when it served his purpose to do so, he testified had been "admirably kept" and with a view of "affording *all* information." Further than this, Mr. Hanna expressly says in his first deposition that he made the defendants' first statement "from our books," and that all items of information as to the number of machines sold were "wholly compiled from data furnished from our books;" and he adds that he "made it correctly," and as above stated, that the books

were "admirably kept—with great system—and kept with a view of affording all information." (Record, 169-70). Now, however, after the examination of the books by Mr. Franks, and after his testimony largely increasing the number of the defendants' infringing machines, Mr. Hanna comes in and impeaches his first statement by saying that it was not made from the books, as he had before testified, but from "memory," to the extent of 6,140 machines; that is, he testifies that he left this number of machines out of his first statement, because from his "memory" he knew they were double frame machines. If it was then considered that the books did not "always indicate whether a machine is a single frame or double frame," or, in other words, show all of the double frames, how could he state in his first deposition that the figures then given were taken "from our books" and were "correct in every particular?"

As an additional reason why Mr. Franks' statement should be accepted in preference to that of Mr. Hanna, it is proper to suggest that, according to their own evidence, the defendants stand in the position of having mixed up or confused the complainant's goods with their own—the single frame with the double frame machines; and hence the case falls within the rule relative to a confusion or mixture of goods.

Applying this rule to this case, and the fact that the books do not "always indicate whether a machine is single frame or double frame," if it be a fact, instead of a mere subterfuge to throw doubt on the correctness of Mr. Franks' testimony, becomes utterly immaterial. It was for the defendants to distinguish their own property or lose it. If they claim that machines appearing on their books as single frame machines were in reality double frame machines, and thus impeach the integrity of their own books, it must surely be by testimony more substantial and reliable than that of Mr. Hanna, based on his "memory" only. The unsupported

testimony of a single interested witness as unreliable as Mr. Hanna is shown to be, is certainly not sufficient to establish the fact that Mr. Franks' statement is incorrect, agreeing as it does in all respects and in every particular with the entries in the books, which Mr. Hanna admits were kept with admirable system, and with a view of affording *all* information.

In view of these considerations, we submit and insist that the complainant is entitled to a recovery based on the number of machines disclosed by Mr. Franks' examination, instead of the number which Mr. Hanna discloses; that is, we submit that, instead of computing the complainant's damages on 27,200 machines, they should be computed on 32,382 machines, and that the Master and the court erred in not computing the amount on this number.

THE MATHEMATICAL STATEMENT.

At the time Mr. Hanna produced his first statement—October 24, 1882—there was a note at the foot showing that the defendants had paid $57,777.50 to one James A. Saxton, and Mr. Harding, counsel for the defendants, called special attention to this payment. This note recites that the $57,777.50 were paid "on above machines." (Record, 167). The "above machines" were the 23,438 machines first reported, which did not include the 3,762 "Droppers" afterwards reported, February 14, 1883. Mr. Hanna was asked about these payments, and we here quote his evidence:

"Q. 23. Do you know whether such royalties were actually paid to him or not? A. Our books show they were paid.

"Q. 24. When do the books show they were paid? A. I can give you the dates and amounts:

In the year 1874	$ 4,552.50.
In the year 1875	15,520.
In the year 1877	14,957.50.
In the year 1878	22,747.50.
Making a total of	$57,777.50."

(Record, 170).

When Mr. Hanna was recalled, Feb. 14, 1883, he was asked:

"Q. 2. The statement furnished at the time of your other examination shows an amount of over $57,700 paid to James A. Saxton, as royalties under other patents. Have you looked that matter up, and are you able to give any information on it now? A. I have not looked it up and am not able to give any information. I know the money was paid.

Q. 3. Please produce a copy of the license under which that money was paid. A. I here produce a copy of it.

"Q. 4. How were those payments made—after the machines were sold or before, and in each year for the machines sold that year, or for the machines sold in other years? A. I could not tell you. To the best of my knowledge and belief they were paid according to the terms of the contract." (Record, 214-15.)

Mr. Hanna thus states that to the best of his knowledge and belief the moneys paid to Saxton "were paid according to the terms of the contract." Turning, now, to the contract with Saxton, which the defendants produced, we find that this contract provided that the payments to Saxton were to be on the first day of January, each year, for the machines manufactured the preceding year. The clause of the contract in relation to these payments says:

"And it is further understood and agreed that the said party of the second part shall render an account of the number of machines manufactured under this agreement to the party of the first part by mail, addressed to him at Canton, Ohio, on the first day of December in each year, and pay to said party of the first part, on the 1st day of January ensuing in each year, the sum of two dollars and fifty cents ($2.50) upon each and every of such machines, at the city of Chicago, on application of the party of the first part, or his authorized agent. (Record, 279).

This is the provision of the contract, and there is not one word of evidence in the record to show that, the payments were not made as specified in the contract, and the only witness who testifies about the matter at all says that, according to his best knowledge and belief, the payments were made as required in the contract.

If the payments were made according to the contract, then the $57,777.50 were paid for machines manufactured

prior to the year 1878, because the last payment was made in the year 1878, and must have been, according to the terms of the contract, for machines manufactured the preceding year—the year 1877. Assuming, therefore, as we have a right to assume from the contract and from Mr. Hanna's testimony, that the $57,777.50 represented the royalty on machines manufactured prior to the year 1878, then at $2.50 a machine—the sum specified in the contract—the defendants had up to that time made 23,111 machines —because $2.50 goes in $57,777.50 just 23,111 times. If we turn now to Hanna's statement, and add to the 23,111 machines the 4,041 machines sold in 1878, and the 3,621 machines sold in 1879, and the 3,762 "Droppers," on which none of the Saxton money is claimed by the defendants to have been paid—and which were not included in the "above machines" (Record, 167), on which the $57,777.50 were claimed to have been paid—then we have 34,535 machines as being the true number which the defendants manufactured and sold during the six years of their infringement. We do not see how anything could be more conclusive than this mathematical calculation. It demonstrates beyond question that the defendants made and sold many thousand more machines than admitted in their statements.

If we examine this matter of the Saxton payments from another view, we find that the 27,200 machines reported by Mr. Hanna cannot possibly be correct. The Saxton license provided under no circumstances for a continuation longer than the harvest of 1878. It says:

"It is further understood and agreed that this agreement is to continue during and for the year and harvest of 1874, and the said party of the second part is to have the option, at any time between this date [February 19, 1874] and the 15th day of October next, to elect to continue the license and agreement for and until and including the year and harvest of 1878." (Record, 278).

If we suppose that the terms of the contract were departed from—though Mr. Hanna, the only witness on the

question, says that to his best knowledge and belief they were not—and that the payment of 1878 was for machines built in 1878, then there would be the machines of 1879, and the "Droppers," to be added to the machines on which the payments were made. The payments, at $2.50 a machine, amounted, as we have seen, to 23,111 machines. The machines sold for 1879, according to Mr. Hanna's original statement, amounted to 3,621, and the "Droppers" amounted to 3,762, which would give us a total of 30,494 machines. This result is arrived at, as the court will see, by departing from the terms of the contract, and making a supposition, unrequired by the evidence, in the defendants' favor. We simply present this view of the case, which is less in accordance with the evidence than the other, and which is more favorable to the defendants than the evidence requires, to show the court that, in any possible view of the case, Mr. Hanna's statement of 27,200 machines cannot be accepted as the true and correct one, nor as showing the number of machines which the defendants really manufactured and sold. Not only is Mr. Hanna's statement discredited by the testimony of Mr. Franks, but it is absolutely impeached, and its unreliability exposed, from this simple mathematical calculation, based on the undisputed facts given.

In view of all this, we most earnestly insist that Mr. Hanna's statement, discredited as it is by his manner of testifying, by Mr. Franks' examination, and by these simple mathematical deductions, should be disregarded as showing the *highest* number of machines for which the defendants should account, and that Mr. Franks' statement should be adopted by the court as the true basis on which the account should be stated. We ask the court to correct the error into which the Master and the court below manifestly fell, in adopting the statement furnished by Mr. Hanna, instead of that furnished by Mr. Franks. A mere

affirmance of the decree below, without correcting this error, cannot afford the appellee complete justice.

THE QUESTION OF INTEREST.

On the question of interest, the Master in his Report said:

"It is insisted upon the part of the complainant that interest should be allowed from the time of the infringement, or rather from the end of each year in which sales were made, respectively, and cases are cited in support of this position. I do not, however, recognize this case as falling within the reason of the rule, and have therefore disallowed the claim in stating this account." (Record, 62).

The Master, however, allowed interest at the rate of six per cent. per annum upon the sum reported, from the date of the announcement of the decision of the court establishing the rights of the complainant—March 13, 1880—"from which time compensation for the alleged unauthorized use is shown to have been deliberately withheld from the complainant." (Record, 62).

The complainant duly excepted to this ruling of the Master on the question of interest, and argued the exception before his Honor, Judge Gresham. Judge Gresham disallowed the exception, and allowed interest only from the date of the Master's Report—July 21, 1884.

Our contention is that the appellee is entitled to interest on the royalties on each year's sales, from the end of the years in which the sales were made, respectively; that is, on the sales of 1874 from the end of 1874; on the sales of 1875, from the end of 1875, etc.

The first ground on which the complainant thus asks interest is that, in most respects, the case is analogous to an action of trover, and the rule in such cases is thus stated in Addison on Torts, p. 453, Note:

"It is undoubtedly the general rule that the measure of the plaintiff's damages in an action of trover, is the value of the property at the time of the conversion and interest thereon from the time of the conversion, up to the rendition of the verdict."

The second ground for this claim is that interest should be allowed under the rule often stated or suggested by this court, and which, without regard to other reasons, is particularly applicable to this case because of the deliberate character of the defendants' infringement. This rule is thus stated in *Seymour* v. *McCormick* (16 How., 489):

"The only actual damages which the patentee has suffered in such a case is the non-payment of the price which is put on his license, with interest."

At a second trial of this same case (3 Blatchf., 224), after it had been reversed, Justice Nelson, charging the jury, in the light of the utterances of this court, said:

"The customary charge for the right to use the patented invention is the measure of the damages which the patentee is entitled to recover in case of an infringement, with *interest* upon the same from the time of infringement. In other words . . . that fee, with interest from the time of the particular infringement, is the measure of damages for each infringement."

But the latest utterance of this court on this question of interest is in *Tilghman* v. *Proctor* (125 U. S., 143), in which the court, through Justice Gray, said:

"In an action at law for the infringement of a patent, the plaintiff can recover a verdict for only the actual damages which he has sustained; and the amount of such royalties or license fees as he has been accustomed to receive from third persons for the use of the invention, with *interest* thereon from the time *when they should have been paid* by the defendants, is generally, though not always, taken as the measure of his damages; but the court may, whenever the circumstances of the case appear to require it, inflict vindictive or punitive damages, by rendering judgment for not more than thrice the amount of the verdict."

As the complainant in this case is relying upon the recovery of damages, instead of profits, the rule of damages is the same as if this were an action at law. As said by Justice Strong, in *Locomotive Truck Co.* v. *Penn. R. R. Co.* (5 Banning & A., 518):

"There is no conceivable reason why the damages sustained by the patentee from the infringment of his patent are not the same whether he proceeds at law or in equity."

But in addition to invoking this rule of *Seymour* v. *McCormick* and *Tilghman* v. *Proctor*, which are representative of many other cases, we insist that the conduct of the defendants has been such as to justify the allowance of interest in order to afford complete indemnity. The allowance of interest has been often recognized by this court as proper, even on a recovery of *profits*, where the infringement has been deliberate and wilful.

In *Mowry* v. *Whitney* (14 Wall, 653) the court say that *generally* interest should not be allowed where the recovery is on the basis of *profits*, but that even then they "will not say that in no possible case can interest be allowed."

In *Littlefield* v. *Perry* (21 Wall., 229) the court, after stating that the decree was on the basis of *profits*, say:

> In *Mowry* v. *Whitney* it was held that interest is not allowable in such cases, *except under peculiar circumstances*. The testimony thus far presented in this case does not, in our opinion, justify such an allowance. It will be for the court to determine, upon the coming in of the new report, accompanied by other evidence, whether the conduct of the defendants has been such as to subject them to liability in this particular. Profits actually realized are usually, in a case like this, the measure of unliquidated damages. Circumstances may, however, arise which would justify the addition of interest, in order to give complete indemnity for losses sustained by wilful infringements."

In *Tilghman* v. *Proctor*, *supra*, this court, in laying down the rule as to interest on *profits*, as distinguished from *damages*, and in speaking of "the exception of the plaintiff to the refusal of the Master to allow interest on *profits* before the date of his report," said:

> "If the question thus presented were a new one, it would require grave consideration. But, by a uniform current of decisions of this court, beginning thirty years ago, the profits allowed in equity, for the injury that a patentee has sustained by the infringement of his patent, have been considered as a measure of unliquidated damages, which, as a general rule, in the absence of special circumstances, do not bear interest until after their amount has been judicially ascertained." (Page 160.)

It may thus be seen that, whatever be the general rule, the courts have often recognized the propriety of allowing

interest, even in cases of profits, where the infringement is shown to have been "wanton," or where there have been "special circumstances," or where the allowance of interest is necessary "in order to give complete indemnity for losses sustained by wilful infringement." In other words, in determining whether interest should be allowed in a case of profits, the courts have often said that it is material to inquire whether the defendant's infringement has been of such a wanton character as to "subject them to liability in this particular." But we have not been able to find a single case holding that, in a case of *damages* on the basis of a license fee, it is necessary to show that the defendant's infringement has been wanton or wilful. On the contrary, whenever the question has been before them, the courts have always said, as in *Seymour* v. *McCormick*, that in such case the patentee is entitled to recover his license fee, "with interest on the same from the time of infringement."

But, if the allowance of interest in this case depends on the character of the defendants' infringment, rather than upon the character of the recovery as between damages and profits, then we submit and insist that the element of wilful infringement is not lacking.

As before shown, the defendants had actual knowledge of the Graham patent from numerous interviews between them and the patentee before the infringement began; they had direct knowledge of the patent from an official letter of the Patent Office, dated October 7, 1875; they were again notified of the patent and of the complainant's claim by the commencement of this suit, June 8, 1877; they continued their infringement, and made more than nine thousand machines after the suit was commenced; they were informed of the validity of the patent by Judge Blodgett's decision, announced a few days after the commencement of this suit. Under all of these circumstances, it will be difficult to con-

ceive of a case where the defendants' infringement was more arrogant, deliberate and wilful.

Under the decisions of the court and the peculiar circumstances of this case, it seems to us clear that both the Master and the court erred in refusing the complainant interest on the amounts allowed as damages, on the basis of a royalty or license fee "from the time when they should have been paid by the defendants." Damages should have been paid by the defendants at the end of each year's use. The amounts were withheld from the complainant from the end of each year, and the defendants should be required to pay interest on the amounts which they thus retained, and of which they have had the use until the present time.

There can surely be no valid reason why interest should not be allowed, as was done by the Master, from the date of Judges Drummond and Dyer's decision—March 13, 1880—when the defendants were judicially informed that they had been using the complainant's invention. From that time on they certainly withheld compensation from the complainant deliberately, and with a full knowledge that they did so at their own risks, one of which was that they might be required to pay interest on the amount so withheld.

Judge Dyer, in the case of *Graham* v. *Geneva Lake Company*, took this view of the case, and required the defendants to pay interest from the date of the court's decision finding infringement, and the entry of the interlocutory decree referring the case to the Master. He said:

"A royalty or license fee of three dollars on each machine, if paid on 1,570 machines, would make an aggregate of $4,710, and on that sum I shall also allow interest at seven per cent from the date of the entry of the interlocutory decree, which was October 11, 1880." (Record, 263).

Judge Blodgett also took the same view in his opinion in *Graham* v. *Plano Company* (35 Fed. Rep., 597), in which he held that complainants were entitled to recover "damages at the rate of three dollars per machine, *with interest from the date of the interlocutory decree.*"

We therefore submit and insist that the court erred in refusing to allow the complainant interest from the end of each year's infringement, and that he still further erred in disallowing interest from at least the decision of Judges Drummond and Dyer finding infringement. We therefore ask the court for the allowance of interest from the end of each year's infringement; or, if this cannot be done, from the date of Judge Drummond and Dyer's decision—March 13, 1880—as reported by the Master.

THE MEASURE OF DAMAGES.

It may be observed, as preliminary to the consideration of the question of damages, that the defendants claim that they received no "profits" from the infringement complained of. In view of this claim by the defendants, and of the practical impossibility of arriving at the exact facts, which was well illustrated by the difficulty experienced in showing from their books the number of infringing machines that they had made and sold, the complainant decided to waive profits and insist on damages, as under the statute he might. As will be hereafter shown, he introduced all possible evidence, not merely cumulative, to show the amount of these damages; and, as has been held in *McKeever* v. *United States* (23 Off. Gaz., 1529), where, a patentee—

"Has clearly suffered a material loss by the defendant's use of his invention, and has produced all the evidence which the nature of the case admits of to establish the amount, there has never yet been a case in which his recovery has been restricted to nominal damages."

As already stated, the Graham invention provides, by means of a light and simple mechanism, both for an automatic and controllable raising, lowering and rocking of the finger-bar, independent of the main frame, and without the intervention of an under or supplemental frame. Others had previously provided for rocking the finger-bar in connection with the main frame, by attaching the bar directly to

the frame, so that whenever either moved up or down, the other always had a similar motion. Others afterwards sought to secure a rocking motion by attaching the cutting apparatus to a second or supplemental frame, placed under the main frame, as will appear by the model of the machine manufactured by the defendants immediately before they adopted the Graham invention As has been already suggested, a great objection to an attachment of the finger-beam to the main frame of the machine was that, whenever either the frame or finger-beam moved up or down, the other was required to have a similar movement. For instance, if the shoe passed over an obstruction, say four or six inches high, it would raise the rear end of the frame an equal distance, and, of course, cause a corresponding pushing down of the front end and tongue; or if the castor wheel, on which the rear end of the frame was supported, passed over an obstruction, say four or six inches high, it would raise the rear end of the frame and the inner end of the sickle bar an equal distance, and, of course, cause great waste, particularly in mowing where the finger-bar should always hug the ground and cut as close to the surface as possible. A great objection to an attachment of the finger-beam to a second or supplemental frame was that such frame rendered the machine unsightly, cumbersome, heavy and expensive. And, in either of these cases, at the time of Graham's invention the sickle bar was incapable of an independent, automatic rocking motion. The defendants' self-adjusting rocking motion, shown in their old double frame mower in evidence, was not made until 1866—two or three years after Graham's invention. (Record, 309, 311).

Such was the state of the art at the time Graham entered this field of invention. The necessity of an automatic rocking motion to enable the sickle bar to readily adjust itself to the irregularities of the ground, and that could at the same time be controlled by the driver, if desired, and of a rock-

ing motion produced independently of the main frame, and without the intervention of an under or supplemental frame, was fully realized by manufacturers. So far as shown, however, the problem of devising any practical way of producing these results was never worked out before the Graham invention. Of course, the defendants claim that Graham is not entitled to the credit of accomplishing these desirable results; that he has not described them, or means for producing them; but an examination of his patent will show, beyond question, that he is entitled to everything now claimed for him, namely, that he contemplated and provided for both an automatic and controllable rocking motion, both independent of the main frame, and both without the intervention of an under or supplemental frame. This statement is fully borne out by the quotations from his patent, made in considering the nature and characteristics of his invention in the opening part of our brief.

We reiterate, therefore, that Graham was the first to provide for a self-adjusting, raising, lowering and rocking of the finger-bar; that he was the first to accomplish these results controllably, or at the option and will of the driver, while the machine was in motion; that he was the first to accomplish these ends independent of the main frame, and on a single frame machine; and that his claims fully cover all of these movements, whenever accomplished in substantially the way described in the patent.

General Evidence of Utility.—Not mentioning the self-adjustability of all his movements, Graham made a great advance in the art when he thus provided for accomplishing the raising, lowering and rocking motions of the finger-bar *independently* of the main frame, and without the intervention of an *under* or *supplemental* frame. To make the importance of this advance in the art, and of the other advantages resulting from the use of Graham's simple mechanism, apparent, we cannot, perhaps, resort to a better

source of information than the statements of the defendants themselves, in their own pamphlets and circulars—statements made to the public for the purpose of inducing trade, and on the faith of which, it is reasonable to presume, they sold many machines and received large amounts of money.

In one of these circulars, issued in 1875, the year after they began to infringe, the defendants, in speaking of the infringing machines, say:

"We have greatly improved the 'Advance' this year, having substituted the *single* frame with an iron drag-bar, for the *double* wooden frame used last year, thus simplifying and lightening the machines very much, and at the same time preserving all the qualities which have made this machine such a general favorite in the past. Our arrangements for tilting the points of the guards to pick up fallen grain is very ingenious and effective, and at the same time easily managed by the driver." (Record, 222).

In speaking of another one of the infringing machines, the defendants, in this 1875 circular, say:

"The improved Prize mower is a two wheeled machine, with jointed bar cutting four feet in width, and has proven itself the best and most reliable grass cutter manufactured. It cuts equally well on rough or smooth ground and cannot be clogged in any kind of grass or clover. Owing to its grea. power it can be stopped in the heaviest grass or clover and start again without backing an inch. We know that every purchaser of this implement will be more than satisfied with it. It is of very light draft, and is so nicely balanced that there is no weight on the horses' necks, and no side draft." (Record. 222).

In speaking of the "Dropper," another one of the infringing machines, the defendants, in this 1875 circular, said:

"The 'Advance' dropper is a machine adapted especially to the wants of those having hilly farms, or who raise but little grain and a great amount of grass. It is a combined machine, with two bars—one for reaping, cutting five feet wide, and one for mowing, cutting four feet wide. It is a complete machine of its kind, made under the Seiberling patents, but a great improvement on the original; it gave perfect satisfaction wherever it was tried during the past season, and every farmer desiring a light machine, which will, at the same time, be very durable and do good work, cannot do better than to buy the Advance Dropper." (Record, 222).

In a pamphlet issued by the defendants in newspaper

form in April, 1875, in speaking of the machines which have been held to have been infringements, they say:

"We have: 1st. Our improved single frame Advance, a machine much handsomer in appearance and of lighter draught than the old double frame, but preserving the essential features of the machine which have made it so popular in the past. 2nd. Our improved Prize mower, which, during the past season, has won hosts of friends. 3d. The 'Advance' dropper, the best in the market." (Record, 222-3).

In this same circular of April, 1875, in speaking of the improved Advance, which they called the "king of combined machines," the defendants say:

"This machine stands in merit far ahead of all competitors—in fact, there is no machine fit to be called its competitor; it is so much superior to all other machines of its kind that it is strange that farmers will be deluded into buying any other, so long as they can get one of these famous grain savers. There are many other reapers which work well enough in nice standing grain, which, in fact, are great improvements on the old fashioned cradle, but the Advance stands without a rival in its adaptation to all conditions of grain, light or heavy, long or short, straight or tangled; in fact, no matter how bad the condition of the grain may be, or how difficult to cut, this superb machine will cut it clean." (Record, 223).

In this same circular of April, 1875, the defendants again say:

"We have replaced the double wooden frame by a single one, substituting for the auxiliary frame an iron drag-bar, thus making the machine much lighter and handsomer, without lessening its strength and durability, and at the same time retaining all the advantages of the double frame." (Record, 223).

In a circular issued in February, 1876, in speaking of one of the infringing machines, the defendants say:

"No reaper can do better work than the improved Advance did this year. No matter how hard to cut the grain was, no matter how badly lodged or tangled it may have been, this unrivalled implement was completely master of the situation. It repeatedly cut grain where other machines failed to do it." (Record, 224).

In a circular issued in February, 1877, the defendants say:

"Our improved Advance is unchanged, and needs no comment, as its record in the past speaks louder than words. Our Prize mower is also un-

changed. That it is everything a farmer could wish for in the shape of a mower is sufficient reason for our letting well enough alone, and offering it to you on its past meritorious record." (Record, 225).

And again, in this same circular, in speaking of the "Advance," the defendants say:

"We have not changed this machine in any particular from what it was last year, nor do we know of any point in it where it could be improved. The many testimonials we receive from all quarters of the country have so satisfied us as to its perfect working, that we have not considered it desirable to spend any time uselessly in making changes." (Record, 226.)

In a pamphlet issued in 1879 the defendants say:

"No reaper can do better work than the McCormick Advance did last year. No matter how difficult the grain was to cut, no matter how badly lodged or tangled it may have been, this unrivalled implement was completely master of the situation, and it frequentiy cut grain where other machines utterly failed." (Record, 227-8).

In a pamphlet issued in 1880 the defendants, in speaking of the "Advance," say:

"By means of a crank (which may be seen in the cut) at the driver's right hand, the points of the guards and the reel may be thrown down to pick up lodged or leaning grain, and by the use of this contrivance the very worst kind of lodged or tangled grain cannot escape the sickle." (Record 229).

We have thus quoted at length from the defendants' own statements, covering the whole period of the infringement, to show their own estimate of the advantages resulting from the use of the Graham invention, in its enabling the defendants to dispense with the heavy double frame used by them until they began infringing, in 1874, and in its enabling the machine to effectually and perfectly cut tangled, lodged and fallen grain or grass. We submit that nothing could more conclusively establish the fact that the Graham invention, as used by the defendants, was an improvement of great practical and financial value.

Of course, the defendants now contend that these advantages are in no wise due to the use of the Graham invention. Their man Hanna, recognizing the force of their admissions, plainly and coarsely stated that "we have to give a little

taffy every year." (Record, 174). But the fact stands, that just as soon as they adopted the Graham invention they dispensed with their old, cumbersome, supplemental frame, and secured the advantages which they so repeatedly pointed out in their advertising matter. If this were in no wise due to Graham's invention, it is certainly a curious coincidence that, although they had never been able to dispense with their under or supplemental frame before, they were now able to accomplish this important result, and to secure all of the other advantages named, in the very first infringing machines manufactured. It seems to us that this circumstance alone ought to be conclusive that all of the advantages resulting from their leaving off the supplemental frame were due to Graham's invention; but when we take their own statement that they "substituted the single frame with an iron drag-bar [Graham's invention, as used] for the double wooden frame" of their old machine, we do not see how there can be a possible doubt as to this question.

As a starting point, then, we have the defendants' own admissions that the adoption and use of the features held to be covered by the Graham patent "greatly improved" their machine, making it "much lighter and handsomer, without lessening its strength and durability," and at once placing it "far ahead of all competitors"—so far, in fact, that there was no other machine in the market "fit to be called its competitor."

The question now is,—What measure of damages should be applied? Or, in other words, how much should the complainant be allowed to recover per machine for the use of the invention thus publicly and repeatedly declared by the defendants to be so important and valuable?

Specific Measure of Damages.—As above said, the complainant waives profits, and relies upon a recovery of damages on the basis of a royalty or license fee. The general

rule, that an established royalty or license fee furnishes a safe and proper measure of damages in cases of this kind, may now be considered elementary. But, for the purpose of stating this rule in the language of this court, we will again quote from *Tilghman* v. *Proctor* (125 U. S. 143):

"In an action at law for the infringement of a patent, the plaintiff can recover a verdict for only the actual damages which he has sustained; and the amount of such royalties or license fees as he has been accustomed to receive from third persons for the use of the invention, with interest thereon from the time when they should have been paid by the defendants, is generally, though not always, taken as the measure of his damages; but the court may, whenever the circumstances of the case appear to require it, inflict vindictive or punitive damages, by rendering judgment for not more than thrice the amount of the verdict."

There can be no question that this rule is applicable to this case. But before citing the evidence, which we insist shows that the patentee has established a royalty or license fee, we wish to again call attention to a few circumstances which should be constantly borne in mind.

The patentee always labored under great disadvantages in his dealings with manufacturers. The failure of his early efforts to manufacture the machine and put it on the market, in connection with Porter Bros., Cleveland, and the Werden's, threw a deep shadow over the whole business and left him without the means or influence necessary to fair and equal negotiations and dealings with other manufacturers. The evidence shows that he visited most of the leading manufacturers in the country, and endeavored to make an arrangement to get them to manufacture his machines, but that he was unable to do so. And after he was obliged to commence suit against these defendants, in June, 1877, manufacturers declined to manufacture his invention and pay him a royalty, on the ground that the McCormicks and others with whom he was in litigation would succeed in destroying his patent, and therefore they did not care to engage in the manufacture of the machine, or pay a royalty. (Record, 207).

For these reasons, other manufacturers followed the example of these defendants, and generally considered it unnecessary to recognize Mr. Graham's rights, even when adopting his invention. Their open defiance and disregard of the patent rendered litigation necessary, and, of course, this brought into prominence many questions, real or imaginary, touching the scope and validity of the patent. The result has been that for more than fourteen years the patent has been the subject of hot litigation, and, until its expiration, manufacturers generally have stood aloof, watching the contest, and hoping for a result adverse to the patent, so that they could use the invention without cost.

To be a little more specific, the evidence shows that after Graham's disastrous enterprises at Waukegan, which extended from 1863 to 1869, he endeavored to get his machine manufactured in 1870 by the Bloomington Manufacturing Company, and by a party named Mr. Flagg; that in 1871 he saw D. M. Osborne & Co., of Auburn, New York; that in the winter of 1871 and '72 he called on Miller & Aultman, of Canton, Ohio, and on the Sieberling Manufacturing Co., of Akron, Ohio; on Russell, at Massillon, Ohio; on Bayliss, at Massillon; on various parties through the states of Ohio and New York; on Walter A. Wood, at Hoosac Falls, New York, and on these defendants; that in 1873 he called on D. M. Osborne, also on the McCormicks; on the Spragues, of Providence, Rhode Island; C. C. Bradley & Son, of Syracuse, N. Y., and the Remingtons, of Ilion, New York. (Record, 209-211).

As showing in a strong light the financial condition of Mr Graham at the time he saw the Remingtons in 1873, and the depressing effect which his failure in manufacturing his machine and securing its adoption had had upon him, we refer to the testimony of Mr. Ross, who was superintendent for the Remingtons. In his account of his interview with

Mr. Graham, when he appealed to the Remingtons to settle for the infringement which they had already begun, Mr. Ross testifies that he said, "I have not got the means to carry me home; I have fought so long." (Record, 442). This was in 1873. He thought he had fought so long; but he was then merely on the threshold of the contest. He has constantly fought for nearly fifteen years since then, and more then eleven of those years with these defendants.

Of course, under all of these disadvantages and circumstances, Mr. Graham has not been able to contract with manufacturers for the payment of royalties as generally, or on as reasonable terms to himself, as might otherwise have been the case; but still his contracts have been sufficient to satisfactorily establish the value of his invention, or at least a value the defendants ought not to complain of as the measure of damages. And right here it may be proper to suggest that, in cases of this kind, an established royalty or license fee is applied as a measure of damages, because the price which the invention "commands between those who sell and purchase it, is the best criterion of its *value*." (*Wooster* v. *Simonson*, 16 Fed. Rep., 680). The contracts, which will be referred to presently, must therefore prevail as establishing the measure of damages, unless there be other evidence in the record which furnishes a *better* criterion of value.

Keeping in mind the position of the patentee, this court will have no difficulty in determining what contracts, under the patent, most satisfactorily show the real worth of the invention, or, in other words, furnish the "best criterion of its value;" and, keeping in mind, also, that the defendants' infringement has been of a most deliberate and wilful character—in fact, committed in open, deliberate and arrogant disregard and defiance of the patentee's rights—this court

will hardly feel called upon to resolve doubtful questions in their favor.

Passing now to the consideration of special facts, we find that arrangments have been made under the patent, in three ways: first, at the rate of ten dollars a machine, under this and other patents; second, at lump or gross figures agreed upon in compromise settlements, and for which full releases and licenses have been given, without special regard to the number of machines, or value per machine; and, third, at the specific rate of five dollars a machine, under the two claims now in controversy, subject to a reduction to three dollars a machine, upon prompt payment. We will consider each of these ways of making arrangements under the patent, in appropriate order.

THE TEN DOLLAR LICENSES.

After the disagreement between the patentee and the Werdens, and the discontinuance of the manufacture of the machine in August, 1869, Mr. Graham endeavored to secure the manufacture of his machine on a royalty.

The Waterman-Bloom 1870 $10 License.—The first contract that he made was with a party named Amos Waterman, in January, 1870. (Record, 178). This agreement was followed by another between Mr. Graham and Mr. Waterman, which was adopted by a party named Jacob C. Bloom. This contract was in writing, and is dated January 29, 1870, and is printed at pages 239-42 of the record. It provided for a royalty of ten dollars per machine under the patent in suit and two other patents. Mr. Bloom paid five hundred dollars under this contract, although he never manufactured any machines under it. Mr. Graham says, in reference to this payment:

"He paid me five hundred dollars as a payment under the contract, which provided that they should pay me a certain amount of royalty

whether they should manufacture machines or not. I had a clause of that description in the agreement as a sort of spur." (Record, 193).

The Bloomington 1870 $10 License.—The next contract which Mr. Graham made was with the Bloomington Agricultural Company, in March or April, 1870. (Record, 178). This license was not in writing. Mr. Graham says that it covered the same three patents as those mentioned in the Waterman and Bloom contract. (Record, 180). The royalty agreed upon was ten dollars a machine under all of the patents. The company began to manufacture under the license, and built fifty machines. They refused, however, to pay the royalty to Mr. Graham, because they were notified by the Werdens not to pay any royalty to him. (Record, 181).

Both of these contracts included all of the claims of the patent in suit, together with two other patents, and the royalty was not apportioned between the patents. As a matter of fact, however, the first and second claims of the patent now in suit embodied practically all of the valuable features of the Graham invention. Mr. Graham was asked:

"Q. 60. What is the value and importance of these first and second claims of the patent in suit, as compared with all your other claims? A. I have always considered them of pretty much the entire value.

"Q. 61. Do you mean they are more important than all the other claims together? A. I do.

"Q. 62. What styles of machines have been contemplated or manufactured under the licenses which you have referred to as granted under this patent—mowers or reapers? A. Mowers, exclusively." (Record, 188).

Mr. Graham's statement above, that these two claims were of more value and importance than all his others together, is uncontradicted.

These contracts, therefore, must certainly be regarded as showing that the first and second claims of the Graham 1868 patent—the ones in suit—were considered worth a great deal more than the royalty claimed in this case—three dollars per machine.

In the absence of other evidence, however, we would not claim that they were sufficient by *themselves* to establish a technical license fee, but they certainly serve to throw light on the *value* of the invention. We shall therefore simply rely upon these contracts as showing Mr. Graham's first licenses, and as affording general evidence that the claims in suit are worth at least three dollars per machine.

THE LUMP SETTLEMENTS.

The next class of transactions were payments of gross or lump sums as settlements or compromises.

The Remington 1873 Lump Settlement.—The next payment or transaction under the patent was the payment of five hundred dollars by the Remington Company, in April, 1873. In reference to this payment, Mr. Graham says:

"They had been manufacturing a machine called the 'Sherwood'. It was the duplicate of the Sprague mower. They had learned before I saw them they were considered liable under this patent. I was at that time negotiating with the Spragues, at Providence, in relation to a settlement. They, the Remingtons, had made a few machines; I don't know how many. They paid me at that time five hundred dollars. They had discontinued making the machines at the time I met them. They paid me five hundred dollars for what they had made." (Record, 187).

Again, on cross-examination he was asked about this settlement with the Remingtons, and said:

"X Q. 110. When you made the collection of the Remington Company, did you call to see them? A. Yes.

"X Q. 111. Did you ask them how many machines they had made? A. Yes.

"X Q. 112. How many did they tell you they had made? A. They told me they had made towards a 100; could not tell exactly without some trouble, but they had made towards a 100 machines.

"X Q. 113. Did you take any means to satisfy yourself how many they had made? A. I did not, beyond their statement; I presumed they were honest, straightforward gentlemen, and I took their word for it.

"X Q. 114. Did they discontinue the manufacture? A. They had discontinued before I saw them." (Record, 193).

Mr. Graham was afterwards asked about the financial

condition of himself and his brother—Hugh Graham, the complainant— at the time he made the settlement with the Remingtons in 1873, and said:

"We were poor, financially very poor, and if I remember correctly, all of the money that had been obtained by settlement or otherwise, up to and including the second money paid by Remington, was consumed in expense, meeting the expenses of litigation or other expenses connected with the business. I, myself, was at work most of the time in the employ of other companies—part of the time with Walter A. Wood & Co., and part of the time with D. M. Osborne & Co. The first money that we received that we could call our own and make any use of, if I remember correctly, was the money we received from Mr. Burrill." (Record, 459).

The defendants took the deposition of Mr. A. M. Ross, the superintendent of the Remington Company, in reference to this 1873 settlement, and he says that up to 1873 they had made probably 2,400 Sherwood mowers, which were released by the payment to Mr. Graham in 1873. (Record, 440).

Mr. Ross says that he was not present at the time the settlement was made with the Remingtons, and that he did not know that any settlement had ever been made with Graham until after suit was commenced against the Remingtons for infringement, in 1880.

Mr. Ross was asked, on cross-examination:

"X Q. As I understand one of your answers, you did not consider the Sherwood mower as within the Graham patent? A. I have always maintained it was not.

"X Q. Do you know anything about Mr. Graham's financial condition or need for money at the time of that settlement? A. I do.

"X Q. Please state what you know on that subject? A. He appealed to the Messrs. Remington with his claims; they referred him to me. I had quite a contest; I have a great many that come to me with these claims, and told him he had no claim. He went away and came to me again in the afternoon, and said he was entitled to some consideration, and if I did not recognize him he should have to commence suit. He said 'I have not got the means to carry me home; I have fought so long,' and he wanted to know if I would not go to Mr. Remington with him. I told him I did not recognize his claim and could not do so. On the morning of the second day, he had seen Mr. Remington, and later on I saw Mr. Remington and

opposed his settlement, and Mr. Graham came in the afternoon, and that was the end of it for a time, until this last case, when I found that release, and until then I did not know that Mr. Remington paid him any money." (Record, 442).

Neither of the Remingtons was called as a witness, and the only statement in the record as to the number of machines which Mr. Graham understood that he was settling for in 1873, is that which we have before quoted from his testimony, where he says that the Remingtons informed him that they had made "towards a 100 machines." (Record, 193). But if Mr. Ross' statements should be considered as showing that this settlement covered a greater number of machines, then Mr. Graham was imposed upon as to the number of machines which the Remingtons had made. In this case he was grossly misled, and being also "without means to carry him home," it cannot be said with any justice that he was then establishing a price or value per machine. It appeared, however, when the evidence was taken in relation to the Sprague settlement, to which we will presently come, that the Sherwood mower was made in two ways, and that only about one-twelfth of them contained Graham's invention. In this view, on the number of machines given by Mr. Ross, Mr. Graham was really receiving five hundred dollars for about two hundred machines which infringed his patent.

But, as this settlement was a mere lump settlement, made when Mr. Graham was stranded at Ilion, New York, without means to carry him home, and possibly upon misinformation as to the number of machines involved, we submit and insist that it is not entitled to consideration as a means of indicating the value of the invention in controversy.

The Sprague 1878 Lump Settlement.—The next settlement for a lump sum was with the Spragues, of Providence, Rhode Island. Mr. Graham had sued Gam-

mon & Deering for selling the Sprague mower, and Judge Blodgett had decided in favor of the validity of the patent, and found infringement. Mr. Deering had been called as a witness on the accounting, and had reported that they had sold 1,392 machines, of which but 488 were infringing machines. (Record, 460). The Sprague Company was hopelessly bankrupt, and after much correspondence with Mr. B. F. Thurston, Mr. Graham accepted $2,650.00, for which he released Gammon & Deering and the Sprague Company. The defendants examined Mr. Cook, the manager of the Sprague Mowing Machine Company. He says that the Sprague Company had manufactured and sold, "in round numbers, about ten thousand" machines, and that, with the exception of a very few machines, all of these were the Sherwood Mower. Mr. Cook was asked on cross-examination:

"X Q. 24. Please state how many of such Sherwood mowers the books show to have been made in the way mentioned in my last question, namely, so that the finger-bar could be rocked or tilted? A. 997 is what I find; of these eight hundred and sixty one went to Gammon & Deering and the balance went to St. Louis.

"X Q. 25. Then, so far as you know or have been able to ascertain from the books, was this number of 997 the only Sherwood mowers having this rocking or tilting feature? A. Yes.

"X Q. 26. Was the settlement with the Grahams, to which you have referred, made at any rate per machine or was it a lump settlement, made at a gross figure? A. It was a lump settlement.

X Q. 27. Was it made as a compromise of a law suit then pending? A. Yes.

"X Q. 28. What was the condition of the Sprague Manufacturing Company at the time of that settlement, made in 1878? A. Hopelessly bankrupt.

"X Q. 29. Can you give us any statement as to its assets and liabilities at that time? A. Yes. Here is a statement I made up from our trial balance of April 30, 1878, which is the nearest date to the settlement with Gammon & Deering. I find the company's assets amounting to $55,817.48. I added to this, for certain contingencies, such as value of mowers on hand, tools and patterns, which I estimated at two thousand dollars, making the assets $57,817.48; and I find the indebtedness to be $709,737.94." (Record, 447).

In view of the fact that the Sprague Company had only made 997 machines which contained the invention in controversy, and in view of the fact that their indebtedness exceeded their assets more than twelve to one, we submit that Mr. Graham was not only justified in accepting $2,650.00 in full settlement, but that his attorneys, who negotiated the settlement, effected a remarkably advantageous one. If this lump settlement is to be considered at all, then $2,650.00 for nine hundred and ninety-seven machines almost amounted to three dollars per machine, and that from a company that was "hopelessly bankrupt."

The Warrior Mower 1881 Lump Settlement.—The next lump settlement under the patent was the one with David H. Burrell, August 4, 1881, by which Mr. Graham transferred to him his claim against the Warrior Mower Company for twelve thousand dollars cash. A suit had been commenced against the Warrior Mower Company for the manufacture of a machine that had never been considered or passed upon by a court; but this suit had not been brought to a final hearing, so that the question of infringement was in doubt. Mr. Graham was asked:

"Q. 50. State all of the particulars connected with the making of this agreement of August 4, 1881, with David H. Burrell. A. We had a suit pending against the Warrior Mower Company, and Mr. Burrell, of Little Falls, came here and wanted to compromise or buy the claim; the reason he gave was this: That the President of that Company was his father-in-law, and he was in very poor health, and a man that was easily worried over matters of that kind, and they were exceedingly anxious to do something with it, to relieve the old gentleman of the annoyance, and we finally made the trade with him. I transferred the claim to him to do what he pleased with, under certain restrictions, for the sum of twelve thousand dollars. The papers show all of the agreement between us.

"Q. 51. What was the condition of that suit, particularly with reference to questions of infringement, or at least, what did you understand about the advice that had been given to the defendants on that question? A. I understood they were advised they had a clear case on the question of infringement—a clear defense. The machine had never been passed on;

that was the first suit brought against that machine. The instrument shows the entire agreement and understanding." (Record, 186).

This sale to Mr. Burrell was made without any information as to the number of machines that the Warrior Mower Company had made, and the agreement with Mr. Burrell provided that he should make no settlement nor grant any license to the company, except for a gross sum, at a less figure than three dollars a machine. (Record, 252).

The defendants called Mr. Burrell, and examined him in reference to this arrangement. Mr. Burrell stated that the Warrior Mower Company had made from ten to twelve thousand machines prior to the settlement, and probably as many as three or four thousand since. On cross examination he was asked to state fully all of the facts connected with the making of the arrangement, and replied:

"A. The knowledge of this suit came to me through Judge Loomis, my father-in-law, who was President of the Company, and I thought the suit was wearing on him, and so I undertook to settle it. For that purpose I went to Chicago and had an interview with Mr. Graham at Mr. Banning's office, and asked them to show me what they based their suit upon, and after a little time they gave me the facts of the case. I suggested to them that perhaps it would be best for them to settle with us, and told them the reason why I desired to settle. They said they would think it over; and that they were coming East and would stop at Little Falls to see me, and perhaps the settlement could be made. A week or two after that, Graham and Banning came to Little Falls, and were here on the 4th of August, 1881. They questioned me as to the number of machines we had made. I told them I knew nothing about it; that I was simply a director and stockholder of the Company, and desired to get the matter settled on account of Judge Loomis, and I finally made them an offer of a gross sum of money, and after some little argument over the matter it was finally lumped off at twelve thousand dollars; that, in brief, is the history of the transaction.

"X Q. You did not inform him of the number of machines previously manufactured by the Warrior Mower Company? A. I did not.

"X Q. Do you remember any statements made by yourself at the time of that settlement to Mr. Graham, to the effect that the Warrior Mower Company's machines, as manufactured for the first few years after it began business and up until about 1875, had been different in construction from the Warrior Mower as manufactured afterwards, and

at the time of that settlement? A. I think I told Mr. Graham the machines had been different in construction since about 1875 from what it was before; that the machines had been the same since about 1875.

"X Q. What did you say to him on the question of infringement, as to the machines manufactured before 1875? A. I told him I understood they did not infringe.

"X Q. Was that settlement with the Grahams made at any rate per machine, or on the basis of any particular number of machines, or any particular rate of royalty under the patent? A. It was not." (Record, 435-7).

Mr. Burrell further says that he did not inform Mr. Graham of the number of machines the company would manufacture in the future, and in reference to the amount paid he says:

"I said to him I thought it was usual, where parties stepped up and made a proposition to settle, a concession should be made to them, and the result was I said to him squarely I would pay that amount and no more, and he finally accepted it." (Record, 438.)

We submit that there is nothing in this transaction with Mr. Burrell, which was for a lump sum, without information as to the number of machines the Warrior Mower Company had manufactured or would manufacture, with the question of infringement unpassed upon by a court, with a stipulation that Mr. Burrell should not assign the claim for any rate per machine less than three dollars, that can operate to place a less value upon Mr. Graham's invention. It was with reference to this payment of twelve thousand dollars that Mr. Graham said: "The first money that we received that we could call our own and make any use of, if I remember correctly, was the money we received from Mr. Burrell."

The Geneva Lake 1881 Lump Settlement.—The next lump settlement under the patent was with the Geneva Lake Company, in September, 1881. Graham had recovered a decree against them, at the rate of three dollars a machine, for $4,902.29. The company was insolvent, and Mr. Graham accepted $2,637.50, and the assignment of

a certain patent to Burdick & Leroy, owned by the Geneva Lake Company, for the state of Indiana. In reference to this matter Mr. Graham said:

"Q. 42. State whether you ever obtained any final decree in the suit against the Geneva Lake Company to which you have referred; and if so, what was finally done with such decree? A. I did obtain a final decree or judgment, an execution was issued and returned not satisfied, and finally the case was settled between ourselves and that Company. The judgment in that case was for a fraction over five thousand dollars—I forget just the exact amount—and during the accounting we granted them a license at the regular rate, they paying money in advance for that license, and we finally settled with them, after we discovered their insolvency, for a trifle less than three thousand dollars, if I remember correctly. I could not give you the exact figures. I can, however, by referring to the memorandum. They paid me something less than three thousand dollars, together with the right of the state of Indiana in the Burdick & Leroy patent.

"Q. 43. Gave you an assignment of their patent? A. Yes sir, the Burdick & Leroy patent, for the state of Indiana. The assignment was taken in another name.

"Q. 44. What was the condition of the Geneva Lake Crawford Manufacturing Company at the time that settlement was made? A. I suppose they were bankrupt. The execution was returned not satisfied—no property found. I saw a notice in the daily papers, a few days previous to the serving of the execution, of a sale of their entire effects, under the hammer, at Sheriff's sale." (Record, 184-5.)

The defendants examined Mr. Nethercut, the bookkeeper of the Geneva Lake Company, and he was asked on cross-examination:

"X Q. 35. The Geneva Lake Crawford Manufacturing Company was insolvent in 1881, was it not? A. Yes; I would not be sure about the date—'80-'1." (Record, 424).

We submit that the settlement of this decree, which had been rendered at the rate of three dollars per machine, in view of the insolvent condition of the Geneva Lake Company, affords no evidence whatever to show that Mr. Graham placed a valuation of less than three dollars per machine upon his invention.

The Glass 1882 Lump Payment.—The next gross or lump payment under this patent was with Albert J. Glass, January 13, 1882, who paid five hundred dollars for a right to manufacture the invention. Mr. Graham, in speaking of this matter, says:

"Mr. Glass came to me—he was an old friend of mine—and stated he was about to leave Chicago and engage in manufacturing reapers and mowers at Jainesville, Wisconsin, and they were getting up a new machine up there, and they might possibly run against our claim, and they might not, but, to avoid any difficulty in the future, he was desirous of making an arrangement with us that would allow him to use one or both of these claims in that mower, if they happened to strike it. He offered me five hundred dollars for such a license, and as our patent was nearly expired, had only a short time to run, and there was uncertainty of their getting near enough to make them liable, I concluded to trade with him, and I made such a trade with him as the papers in that particular show, which are here in evidence." (Record, 187.)

This license, which is printed at page 253 of this record, provides that "this license shall not be in any way assignable, nor shall other parties be associated with the licensee in exercising the privileges hereof, without the written consent of the parties of the first part," and that, if there should be any extension of the Graham patent, he would pay Mr. Graham at the rate of three dollars per machine.

We submit that this lump payment of five hundred dollars by Mr. Glass, under which it does not appear that any machines were manufactured containing the Graham invention, which was simply a personal privilege, specifically limited to an old friend, can cut no figure as indicating the value of the Graham invention involved in this controversy.

The Johnson 1882 Lump Settlement.—The next settlement for a gross sum was with the Johnson Harvester Company, of Brockport, New York, which paid ten thousand dollars. A suit had been commenced against them, but had not proceeded far. Mr. Graham says:

"We had a suit pending against the Johnson Harvester Company, and

one of their officers—I think it was their president, I cannot tell his name—came on here and wanted to effect a settlement; there was a good deal of question about the infringement of the machine, even in our own household, for that matter, and we finally settled that case for the sum of ten thousand dollars. It was a lump settlement." (Record, 186).

The settlement was reduced to writing, and is printed on page 254 of the record. It recites that "concessions being made on both sides, said parties have agreed upon a compromise of said suit, and of all matters connected therewith, or in anywise in controversy between them."

The defendants examined Mr. Charles Dewey, the president of the Johnson Harvester Company, in reference to this settlement with Mr. Graham. He says that all of the machines included in the settlement would be about eight thousand. (Record, 428). Mr. Dewey was asked:

"X Q. In the making of that settlement, was the number of machines manufactured by your company, and which were claimed to be an infringement of the Graham patent, mentioned or disclosed to Mr. Graham? A. No, sir; only in a general way. We estimated that as the number of machines of the different kinds we had made that were successful.

"X Q. And you stated that you had made various kinds of machines which did not embrace the features of the ones claimed to be an infringement of his patent? A. Yes.

"X Q. The whole settlement, then, was a compromise settlement of a law suit pending against your company, on account of that alleged infringement, was it not? A. Yes.

"X Q. In making that settlement with the Grahams, did your Co. claim or insist that its machines were not an infringement of the Graham patent? A. Yes; I think we did.

"X Q. Who represented your company as counsel in the suit against it, with the Grahams? A. Mr. Harding and Mr. Bennett." (Record, 428-29).

We submit that this payment of ten thousand dollars, which was made in a case where the infringement was doubtful, where the number of machines included in the settlement was not disclosed, and where the whole transaction was the settlement and compromise of a pending law

suit, can have no effect in determining the value of the Graham invention in controversy for each machine in which it was used.

In reference to all of these lump settlements, it may be stated that in every case they were compromises, generally made after suit begun, and generally where the question of infringement was, to say the least, doubtful. The amounts paid were not estimated on any particular basis, or at any particular rate. All but the last two or three were made at a time when the patentee was in urgent need of money to meet ordinary living expenses, as well as to carry on his litigation; and as the then counsel for these defendants appeared for the Johnson Company, the Remington Company and the Warrior Mower Company, the last two or three settlements were made under circumstances at least giving ground for a suspicion that a general combination had been formed to resist the patent; and most or all of them were made while this suit was pending, before the defendants' petition for a rehearing was overruled, and therefore while the patent was under the cloud of this litigation.

The law is well settled that general compromise settlements, such as those above are shown to have been, cannot be considered as fixing or establishing any rate of royalty or license fee that can be applied as a measure of damages in an infringement suit.

Thus, in *Black* v. *Munson* (2 Banning & A., 626), Justice Hunt, speaking of the general rule above mentioned, namely, that in cases of this kind an established royalty or license fee constitutes the true criterion of damages, says that such "rule can only be applied where there is a fixed and established price at which a license is granted," and then adds that—

"No price can be said to be fixed, or royalty established, where the pat-

entee varies his price according to the courage or ability to resist of the infringer, or where there are other circumstances showing the absence of a fixed and established fee."

This language is quoted in *Matthews* v. *Spangenberg* (14 Fed. Rep., 351), in which Judge Wallace, holding that such compromise settlements as those shown here cannot be considered as establishing a measure of damages, says:

"It is quite impossible from the proof to ascertain what was estimated as the basis of royalty for future use, or as damages for previous use, what was allowed for costs, and what by way of compromise. Everything is left to conjecture and speculation, except the fact that there was a recognition of liability to the complainant for the unlawful use of his invention."

If there were no other reason for excluding compromise settlements in an inquiry of this kind, Judge Wallace gives a sufficient one in the language quoted above, when he says that "everything is left to conjecture and speculation," so that it is impossible "to ascertain what was estimated as the basis of royalty for future use, or as damages for previous use, what was allowed for costs, and what by way of compromise." But in addition to this, it is contrary to all reason and sound principles to say that, although the law encourages compromises, a patentee cannot make them, even under pressing circumstances or in doubtful cases, without impairing or destroying the value of his patent. Or, stated in a different way, it is contrary to all sense and reason to say that a patentee may not, like any other man, act on ordinary, common-sense, business principles, and in proper cases make fair and honest compromises, without prejudicing his rights against manufacturers who refuse to compromise. Shall such manufacturers, who refuse to recognize an honest claim, and by continued and persistent opposition seek to crush a patentee, putting him to the trouble, delay, anxiety and expense of long and most burdensome litigation, be afterwards allowed the same consideration and terms as manufacturers who, respecting the rights of the patentee, make prompt and fair and honest

settlements for the use of the patented property? If this be the rule, then those who make it a business to appropriate other people's inventions will be placed on the same footing as honest manufacturers—concessions cannot be made to the latter without also being made to the former. And if this be the rule, patentees must be advised that, although called a meritorious class, the law really discriminates against them, and, instead of encouraging compromises, according to the general rule, actually discourages their making them, even in doubtful or bankrupt cases.

Assuming, then, that this court will not give controlling weight either to the licenses for ten dollars a machine, which included three patents, or to the settlements at compromise, lump figures, we come to a consideration of the third class of transactions under the patent, namely:

THE LICENSES AT $3 PER MACHINE.

The evidence shows that Mr. Graham granted a number of licenses, all of them but one being at the rate of $5 a machine, under the two claims in controversy, but with a provision that the royalty should be reduced to $3 a machine in case of prompt payments.

The Wayne Company 1878 $3 License.— The first license at the rate of three dollars a machine was made with the Wayne Agricultural Company, of Richmond, Indiana, November 21, 1878. This license was in writing, and is printed on page 244 of the record. It was taken voluntarily. In fact, it was long sought after, and the rate of royalty was named by the licensee itself, and in view of special circumstances, at a figure which all of the parties then considered very low. The license conferred an exclusive right for several states mentioned in it.

The Wayne Company desired to manufacture the Sprague Mower. This mower was not then in the market,

and to bring it into favor with purchasers would require time, effort and the expenditure of money. All of these things were urged as a reason why Graham should make a liberal reduction in reference to his royalty or license fee. Mr. Graham first demanded $5 a machine, but, in view of the circumstances above mentioned, finally consented to reduce his price to $3 a machine. The negotiations for this license were begun in 1876. Mr. Graham was represented by Mr. M. A. Morse, through whom correspondence was carried. After the license had been signed, the Wayne Company neglected to begin manufacturing under it, and in December, 1880, Mr. Graham, becoming impatient, notified them that the license was terminated, and shortly afterwards filed a bill against them for infringement. They had, in the meantime, begun to manufacture a machine called the "Crawford Mower" which contained Graham's invention, and they filed an answer in the suit against them, insisting that the license was in force, and that they were manufacturing under it. In the 4th and 7th paragraphs of their answer (Record, 274-5), they insisted that the license was still in force, and upon their right to manufacture under it. We quote at some length from the evidence in relation to this license.

Mr. Graham was asked:

"State all the particulars connected with the granting of the license to the Wayne Agricultural Company in 1878? A. I think in the winter of 1876 and 1877—I think perhaps in December—Mr. L. L. Lawrence, President of the company, sought an interview with me in relation to the Sprague Mower, which I at that time had sued, but the suit had not been yet determined. He was desirous of building that mower, and wanted to make an arrangement, if I gained that suit. In the summer of 1878 he opened up a correspondence with me in relation to it, and I met Mr. Lawrence here by appointment in August, that year, at which time we negotiated in relation to the matter. Mr. Lawrence offered me three dollars royalty. I asked him five dollars. He told me at the time that he did not think that his company could be induced to pay more than three dollars. We separated then, with the understanding that we would meet at the Kansas City Fair in the fall. We met there according to our understanding at that time, and

closed the trade up at three dollars. I became satisfied I could not do any better, and I closed the trade with him at three dollars per machine. We then made an appointment for a meeting at their place in Richmond, Indiana, some time about the middle of October. Subsequently, the meeting was arranged to take place here, at Chicago. I came on here to Chicago —at that time I was living in Girard, Kansas—and when I got here I got a communication from the company that they had concluded not to deal. I remained here in correspondence with them until late in November, and I went down to their place finally, and there closed up the license that is introduced here in evidence, which was executed on the 21st of November, if I remember rightly.

"Q. 28. What statements or promises were made, if any, on behalf of the Wayne Company, as to its proceeding with the manufacture of your mowers, and building up the trade therein? A. In that license I granted them exclusive territory as to certain states, as to license to sell, and they agreed to supply the demand, or at least to make their best efforts to supply the demand, in that territory, and they insisted that, as it would be some expense to them to introduce the machine and push it, they could not afford to pay me over three dollars, and give it the energy it was entitled to." (Record, 181-2).

On September 7, 1878, the Wayne Company wrote Mr. Morse, through whom the correspondence was conducted, saying:

"Your letter of August 24th came during the absence of our Mr. Lawrence. He has just returned, and we hasten to reply. Our Board has had the matter under consideration, and after looking all over the ground, they came to the conclusion that the offer of three dollars royalty is really as much as we can afford to pay, and work up the sale of the machine as it should be. Mr. Lawrence is desirous of seeing you as early as he can. He leaves for the Ohio state fair on Monday; from there he goes to the Kansas City fair. If you happen to be there, he will be glad to see you. Mr. L. wishes us to ask that you be sure and secure the mower we saw near Chicago, so that in case we should make an arrangement with you we may have the mower for use, etc" (Record, 246).

Mr. Graham says that Mr. Lawrence promised, on behalf of his company, that they would endeavor to build up a large business, and urged this as a consideration for his accepting three dollars per machine, and that it was on the faith of such promises, and of the promises contained in the above letter, that the agreement was made at the rate of three dollars per machine. (Record, 382).

Mr. Morse, being asked about the negotiations, and his interviews with Mr. Lawrence, and the statements that were made, said:

"Mr. Lawrence came to see me in our office on Canal street two or three times, and arrangements were made for him to examine what was known as the Sprague Mower, which was built upon the basis of Mr. Graham's patent. He went into the country in company with Mr. Graham, I think to Libertyville, or near Libertyville, in this state, where he saw and examined the Sprague Mower, and was well satisfied with its working. He then made a proposition for the manufacture of the mower under Mr. Graham's patent, which we would not accept at that time.

"Q. 7. What was that proposition? A. Mr. Lawrence made a proposition of three dollars for each machine that he might manufacture; we asked five dollars, and the matter rested there for a time; the negotiations were not, at that time, closed. Subsequently, upon the representations of his company that they were having a very largely increased trade in their reaper, and as to the necessity of their having a light mower to accompany that in the trade, and that they intended to enlarge their works, increase their facilities, and do a large trade in this mower, it was finally considered best to accept his proposition for the territory named, and the contract was drawn up and duly signed.

"Q. 8. What was said, if anything, by Mr. Lawrence in reference to pushing that mower business? A. He said the company would push it to the extent of their ability—their increased ability. They were to increase their facilities and they would be able to manufacture and sell a large number of those machines." (Record, 218).

"Q. 16. What was the object or purpose for which the license was granted to the Wayne Company? A. The question involved a matter of profit, to secure an income, to have the machine manufactured, to get it before the people, to introduce it again to the trade, and this concession was made for the purpose of having it started immediately and re-establishing its good reputation, for it certainly had a good reputation. Those of us who had been in the trade for years had to meet it.

"Q. 17. What was the reason, as given by Lawrence, that he declined to make any definite arrangement at the time you introduced him to Graham in the winter of 1876-77? A. Because the suit against Gammon and Deering was then pending, and they had no desire to involve themselves in a law suit; in other words, they wanted a clear title to their right to manufacture." (Record, 219).

"Q. 22. As I understand you, you say that the offer of three dollars per machine was first made by Lawrence at the time he went out in the country to see the machine, in the summer of 1878? A. It was.

"Q. 23. That was the offer that was afterwards accepted? A. It was." (Record, 220).

After the Wayne Company had filed their answer insisting that the license was still in force, and that they were manufacturing under it and ready to comply with all of its requirements, and after the complainant had begun to take evidence, the parties arranged the matter upon the Wayne Company paying three dollars a machine for all that they had manufactured—three hundred machines—and giving Mr. Graham three notes, for fifteen hundred dollars each, to cover their manufacture for the years 1882, 1883 and 1884, which they represented would be about five hundred machines per year. (Record, 183-4). The defendants afterwards examined Mr. Lawrence, and he stated that they had manufactured about one thousand machines for each of the years 1882 and 1883, and expected to make as many for the year 1884; but he admitted that, upon the arrangement with Mr. Graham, he had informed him that they would manufacture about five hundred machines a year. We here quote from his testimony:

"X Q. 48. Your company and the Grahams were in litigation at that time? A. Yes.

"X Q. 49. You were contending for the right to manufacture under the Graham patent under the license of 1878, were you not? A. Yes.

"X Q. 51. Did you state to Mr. Graham at that time how many machines you expected to manufacture during each year of the life of the patent? A. I stated that at five hundred then, in that way, that we had, but I did'nt know how many we could get out.

"X Q. 52. Did you not state that it was uncertain how many you would manufacture, or whether you would continue to manufacture during the life of the patent? A. I did not know whether I would be able to manufacture five hundred every year. I would settle on that basis.

"X Q. 53. You assumed that you would make five hundred each year, and paid for it in the way specified in these notes? A. Yes. (Record, 418).

The fact that the Wayne Company manufactured a greater number of machines than they had informed Mr. Graham at the time of the arrangement, when he gave them

a paid up license they expected to manufacture, cannot militate against him. The facts that the Wayne Company agreed to pay three dollars a machine under this license; that when Graham attempted to revoke it and have it declared at an end, they defended the suit on the ground that the license was in force; contended, as Mr. Lawrence expresses it, for the right to manufacture under the license; paid three dollars a machine for all that they had made under it, and paid for the future at the same rate for the number of machines which they expected to manufacture, show conclusively that, in the estimation of the Wayne Company, the Graham invention was worth at least three dollars a machine. They were willing to pay that, and compete with the defendants in this case, who were using the invention without paying anything.

As stated by both Graham and Morse, and as shown by the fact that they afterwards contended to have it continued in force, the Wayne Company earnestly desired this license; but, notwithstanding this, they delayed taking it for two years, because, as Morse says, "they did not want to engage in the manufacture of a machine on the basis of a patent in litigation;" or, as he otherwise expresses it, "they wanted a clear title to their right to manufacture." In any common-sense business view, this hesitation on their part, caused by the opposition of others, coupled with their representation that "they intended to enlarge their works," and "push it to the extent of their ability—their increased ability," and so "would be able to manufacture and sell a large number of those machines," and their agreement that, if they found it equal to their expectations, they would "manufacture it exclusively as a mower" after 1879, and would then "do all in their power to supply the wants of the trade," certainly furnished good reasons for making liberal concessions. As Morse well states, "the question involved a matter of profit, to secure an income, to have the machine manu-

factured, to get it before the people, to introduce it again to the trade; and this concession was made for the purpose of having it started immediately, and re-establishing its good reputation, for it certainly had a good reputation."

As this license is not expressly limited to any particular claims, it is proper that we should explain our statement that it was granted under the two claims now in controversy. As to this, all of the evidence shows that the Wayne Company, having their own reaper, simply desired a license to manufacture a mower—the Sprague mower. The language of the license is that "the party of the first part hereby agrees to license the party of the second part to manufacture their *mowing* machine." (Record, 244). The agreement, executed between the parties at the same time, refers to it as "a license to manufacture and sell a *mowing* machine," and all the way through speaks of "said *mower*" and "*mowing* machine." (Record, 245). In addition to the fact that the license is thus limited to a mower, and nowhere speaks of a reaper, all of the witnesses agree that it was simply intended to authorize the Wayne Company to manufacture the features of Graham's invention contained in the Sprague mower. Graham says the company told him they desired to manufacture "the machine known as the Sprague mower," and that it was for this they wished a license. Morse says the license related to a mower; that representations were made "as to the necessity of their having a light mower to accompany" their reaper, and that they intended to manufacture "what was known in the trade as the Sprague mower;" and in the letter forming a part of the negotiations, the Wayne Company asked Morse to "be sure and secure the mower we saw near Chicago," which both Graham and Morse say was a Sprague mower.

As stated then, all of the evidence shows that the license simply contemplated and authorized the manufacture of a mower as distinguished from a reaper. Turning now to the

patent, we find that these first and second claims are *the only ones that cover features applicable to a mower;* and Graham expressly says that this is so. (Record, 188).

It may be further objected that the license covers a spring coupling pin, secured by another one of Graham's patents. This is true, but the use of this coupling pin formed no part of the negotiations, and was not mentioned or considered in connection with the royalty provided for in this license. As to this, Mr. Graham says:

"After we had got our trade made and Mr. Baxter had got the instrument nearly finished, I happened to think of that pin, and it occurred to me I could throw it in there and perhaps get it introduced by its use in that machine, and I said to them they might use that pin free of cost to them if they desired; hence he wrote a clause there, near the close of that instrument, giving them the right to use it.

"Q. 34. Was that matter considered in any of your previous negotiations, or any reference made to it before? A. No, sir." (Record, 183).

Under these circumstances, can it be seriously claimed that the matter of this coupling pin entered into the negotiations as an element of value, or that it had the least bearing on the question of royalty or license fee?

And so the license simply authorizing the manufacture of a mowing machine, and the two claims now in controversy being the only ones that relate to such a machine, the license must have been granted for these claims, and the mere "throwing in" of another unimportant feature, not specially considered or cared for, cannot alter the fact that the royalty or license fee was fixed solely with a reference to the first and second claims of the patent now in suit.

The Ann Arbor 1880 $3 License.—The next license at the rate of $3 per machine was granted the Ann Arbor Agricultural Company in September, 1880. (Record, 246). It is expressly limited to the two claims now in controversy, and provided for the payment of a royalty of five dollars a

machine, but with a provision, usual in such instruments, that the royalty might be reduced to three dollars a machine, if full and true returns were made and the royalty promptly paid. The Ann Arbor Company immediately proceeded under this license to manufacture machines. This company was just beginning business, and in 1881 they manufactured but thirty machines, on which they paid $90. (Record, 194). In 1882 they manufactured one hundred and ninety machines, and paid $570. (Record, 196). In 1883 their business had still further increased, and they manufactured three hundred and fifty-four machines, on which they paid a royalty of $1,062. (Record, 458). This was the last year before the record in this case was closed. There was never any litigation of any kind, or any infringement whatever on the part of the Ann Arbor Company.

The Geneva Lake 1881 $3 License.—The next license at the rate of three dollars per machine was the one granted to the Geneva Lake Crawford Manufacturing Company, January 27, 1881. (Record, 247). It is expressly limited to the two claims now in controversy, and provides for a royalty of five dollars a machine, subject to a reduction to three dollars a machine, if paid promptly. Under this license the Geneva Lake Company manufactured sixty-six machines for the year 1881, on which they paid three dollars per machine. (Record, 199). For the year 1882 they manufactured two hundred machines, containing only the first claim of the patent. Their license provided that if they used but the first claim of the patent the royalty would be but $2.50 a machine. They paid $500 for these two hundred machines, according to the terms of the contract.

But it was urged in the court below that this license is not entitled to consideration, because it was granted after Judge Dyer's decision holding the Geneva Lake Company's machine to be an infringement of the Graham patent. To

this it may be answered that, although taken after the decision, the license was not taken because of the decision, or because of its influence on any matters then in litigation. On the contrary, the fifth paragraph expressly states that "this license is made and accepted without prejudice to any of said parties in respect of any existing rights or privileges, legal or otherwise, and is to constitute no waiver of the same." (Record, 249). Thus it will be seen that no settlement was made at that time, but that the question of damages, and all other questions in that litigation, were left open and unaffected by the license. The only question considered and settled in the license was as to the question of future operations—the royalty to be paid on the machines thereafter manufactured; and the only influence Judge Dyer's decision had on the matter was to settle the question that Graham's invention would be embodied in the machine intended to be manufactured. In other words, the parties settled voluntarily, on an equal footing, with reference to machines to be manufactured in the future, and in the same way they would have settled if there had not been any decision, but the company had admitted that its machine would contain the Graham invention.

The Remington 1881 $3 License.—The license granted to the Remington Agricultural Company, June 13, 1881, also provides for the payment of five dollars a machine royalty —a reduction to three dollars a machine to be made, as in other cases, whenever the royalty was paid at the time specified. (Record, 249).

At the time this license was granted the Remington Company reported that they had manufactured 1,350 machines containing the inventions secured by the first and second claims of the patent in suit, and for these they paid at the rate of three dollars per machine—$4,050. All of the machines which the Remington Company thereafter

manufactured were to be paid for at the regular rate—three dollars a machine—and the evidence shows that the few machines that they did manufacture, before the record was closed, were so paid for. (Record, 199).

AS TO ALL THESE LICENSES.

It will be seen that the complainant has pursued a consistent and uniform course and arranged with parties at a uniform royalty or license fee, in every arrangement made or contemplated which specified any particular rate per machine; and the question now is, whether, in view of all the circumstances, these licenses show any royalty or license fee which can be adopted as the measure of damages in this case.

As to this question, it may be observed at the start that the law does not specify nor require any particular number of licenses to fix a royalty or license fee, but only that they shall be sufficient in number or otherwise to show the price fixed by the patentee and paid by others for the use of the invention. As already quoted, Judge Wallace, in *Wooster* v. *Simonson* (16 Fed. Rep., 680), says that—

"An established license fee is competent and satisfactory evidence of the *value* of a patent right, because the price which it commands between those who sell and purchase it is the best criterion of its value."

Judge Woods, in *National Car Brake Shoe Co.* v. *Terre Haute Car Mfg. Co.* (19 Fed. Rep., 517), says that—

"In order to be competent evidence of value, the prices agreed upon must have been fixed with regard to future use, when, there being no liability between the parties, they are presumed, on both sides, to have acted voluntarily, and therefore to have made up their minds deliberately as to what was a fair price. Such arrangements, licenses thus granted, fees thus fixed, are competent evidence to consider in determining what the actual *value* of an invention is, and what the recovery ought to be for its use."

This being the ground on which the proof of a royalty or license fee is competent in an inquiry of this kind—that it furnishes "the best criterion of value," and is to be consid-

ered "in determining what the actual value of an invention is"—it is immaterial when the license was granted or the royalty fixed—whether late or early in the life of a patent, or before or after infringement. Of course the license must be granted in good faith, in the ordinary course of business, for legitimate business purposes, and under such circumstances that the parties "are presumed to act voluntarily, and therefore to make up their minds deliberately as to what would be a fair price;" but, meeting these requirements, it is as good evidence of value if granted just before the expiration of a patent as if granted just after its issuance, or if granted after an infringement as if granted before.

In fact, it may be said that the licenses granted shortly before the expiration of a patent should be presumed to indicate the *least* value that could be put upon the use of the invention. To illustrate the truth of this suggestion as to the present case—the expiration of other patents on reaping and mowing machines, during the existence of the patent in suit, made a large contribution to the inventions which were free and open for the public to use, without expense or payment. Most of the patents cited as references in this case, and which the defendants contend contain the essence of the invention in suit, had expired and were free to the public to use at the time the licenses above set out were granted. The Haines patent of 1855; the Dolph patent of 1857; the Aultman patents of 1858; the Stetson & Maynard patent of 1859; the Zug patent of 1859; the Ball patent of 1859; the Bartlett & Dodge patent of 1862, had all become public property at the time the Wayne Company were "contending" for the right to manufacture under the Graham patent under the license of 1878, and at the time the Ann Arbor Company, without any suit against them, without any claim against them, without any infringement or any liability on their part, voluntarily agreed to pay three dollars a machine for the invention covered by the

first and second claims of the patent in suit. So we may say that these licenses, granted in the old age of the Graham patent, after the expiration of so many other patents, conclusively show that, in the estimation of the parties taking them, the Graham invention in controversy was worth at least three dollars a machine over everything which they were free to use without let or hindrance.

But, if the inquiry should be limited to operations before or during the infringement, then we submit that the complainant is clearly entitled to recover at least from three to five dollars a machine. Not mentioning the Wayne Company license, four transactions occurred during this time—three before the defendants' infringement began, and one afterwards.

Of those occurring before the infringement, two were agreements at ten dollars a machine, under all three of the Graham patents, as above explained; and in view of the testimony that the two claims in suit embodied practically everything of value in Mr. Graham's patents, it cannot possibly be said that less than three to five dollars a machine of the royalty provided for in these contracts should be apportioned to the two claims in controversy.

The settlement with the Remingtons in 1873, for five hundred dollars, was made, as Mr. Graham testifies, and he is not contradicted, upon the statement that about 100 infringing machines had been made. Of course a full release was given for all of Remington's past transactions; but in determining its bearing on the question of value, the settlement should be considered with reference to infringing machines. It was afterwards claimed in the testimony of Mr. Ross that the Remingtons had manufactured about 2,400 "Sherwood" mowers before that settlement; but it further appeared from the depositions taken at Providence, that Sherwood mowers were manufactured in two forms, of which only about one in twelve there manufactured in-

fringed the Graham patent. In view of this fact, it is probable, even on the figures given by Mr. Ross, that only from one to two hundred machines included in the Remington settlement contained the Graham invention. The defendants did not show that all of them contained it, and we submit that the burden was upon them in that behalf. But, however the fact may be, if the number was reported as Graham states, and if he made the settlement supposing that report to be correct—and coming from large manufacturers of national reputation like the Remingtons, he had a right to presume on its correctness—it cannot now be said that he made a price for 2,400 machines, or any other number, higher than one hundred. And so we submit that, coming down to actual figures, this settlement can only be considered as having been made for one hundred machines, and therefore that the Remingtons really paid at the rate of five dollars a machine.

The last of these transactions which occurred during the time of the defendants' infringement was the settlement with Gammon & Deering and the Spragues for $2,650, made in 1878. According to Mr. Cook's statement, the Spragues had only made 997 infringinging machines (Record, 447), including the ones furnished to Gammon & Deering, and so, on this basis, the settlement was at the rate of nearly three dollars a machine. Mr. Deering's sworn statement was that only 488 infringing machines were received by them. (Record, 460). So that, leaving out the machines made by the Spragues, and not furnished to Gammon & Deering, and for which nothing could have been collected, the settlement was in fact at the rate of more than five dollars a machine.

These being the circumstances, the rate before and during the infringement being at least as high as the royalty established afterwards—if it can be called afterwards, the Wayne Company license having been granted during the infringement—we cannot see how the defendants will be at

all injured by the application of the $3 royalty per machine as a measure of damages. If the royalty established after the infringement were unreasonable or exorbitant, and largely in excess of the value of the invention, then there might be ground for claiming that it should not be applied to the defendants' previous infringements; but it is certainly no hardship to hold that a wrong-doer, appropriating the property of another, takes the risk of whatever that other may afterwards fairly and honestly do. As already suggested, the ground on which proof of a royalty is received in an inquiry of this kind is that it furnishes the "best criterion of value" and is competent "to consider in determining what the actual value of the invention is and what the recovery ought to be for its use," and hence it is immaterial when the royalty was established, provided it was at a time and under circumstances in which the parties "were presumed to act voluntarily, and therefore to make up their minds deliberately as to what would be a fair price."

If the doctrine should be adopted by this court, that royalties or license fees established after an infringement can not be resorted to as the measure of damages in such infringement, notwithstanding they are shown to be a fair and reasonable—at a fair and reasonable value of the invention—still such royalties would be competent in the next case of infringement occurring after they were adopted and established. Thus, this court would be placed in the position of holding that the licenses, which afford a fair measure of the damages in one case are not competent for the same purpose in another under the same patent, though the circumstances of the infringement might be precisely the same. We submit that no reasoning which leads to such an anomaly as this can be correct, or based on sound legal principles.

Judges Bond and Morris, in *Emigh* v. *B. & O. R. R. Co.*

(6 Fed. Rep., 289), had no hesitation in adopting as a measure of damages a royalty established long after the infringement complained of. They said:

"An established license fee, when one is proved, is unquestionably the safest rule of compensation in such cases; and in view of the great difficulty of proving with exactness the profits which have accrued to the defendant, the license fee found by the Master to have existed *at least during the latter portion of the life of the patent*, commends itself to us, under the circumstances of this case, as the measure of compensation least likely to do injustice to either party. . . . The testimony shows that *after* the validity of this patent was sustained by Judge Drummond in the United States Circuit Court for the Northern District of Illinois, and *after* the decree of that court in 1866 affirming the Master's report in the case against the Chicago, Burlington & Quincy Railroad Company, finding the profits derived by that road from the use of the 'Stevens' patent to have been $50 per car per year, the complainant fixed $25 per car per year as the license fee for all railroads using it, and that some eighteen railroads either compromised for past use, or took licenses for future use, substantially on the basis of that fixed rate."

It may be further said in reference to the number of licenses at three dollars a machine, shown in this case, that the number of manufacturers of reaping and mowing machines throughout the United States is not large. Outside of those whose names are given as having used the Graham invention, and as having paid for it in one way or another, there can be named very few others. Probably most of the mowing machines manufactured in the United States are made at the factories of less than a dozen manufacturers. When, therefore, the complainant has shown licenses on the part of three or four at a specified rate of $3 per machine; has shown that some of these parties took these licenses when they were under no possible legal obligation or inducement to do so; has shown that they took them while the defendants were paying nothing and while it was uncertain that the patent could be sustained, and while the payment of royalty put them at a disadvantage in competing with the defendants who paid none; and that in the case of one of them it was regarded as of such value and importance

that the parties contended in court for its continuation—the complainant has certainly made out a *prima facie* case of damages at the rate of three dollars per machine. He has introduced evidence which *certainly tends to show* that the invention is worth that much. The defendants have offered no evidence whatever *tending to show* that it is worth less than $3 a machine. If they could have shown this, why did they not do so? If this case, therefore, had been presented to a jury, the court below would have been, and this court would be, under the necessity of holding that a verdict of three dollars a machine was supported by the evidence. We submit that the same is true of the findings of the Master and the court below.

As the first ground of recovery, then, the complainant respectfully submits that he is entitled to damages on the basis of a royalty or license fee of three dollars per machine.

GENERAL VALUE OF INVENTION.

If it be held, as we think it must be, that the complainant has an established royalty or license fee, applicable as a measure of damages in this case, then, of course, that ends the matter; but, as the defendants will probably contend that no such royalty is shown, it will be proper to consider another question, namely, what is a fair and reasonable value of the invention, as shown by all the evidence? The complainant cannot be limited to nominal damages, for, as already quoted from *McKeever* v. *United States*, where a patentee—

"Has clearly suffered a material loss by the defendant's use of his invention, and has produced all the evidence which the nature of his case admits of to establish the amount, [which is true here] there has never yet been a case in which his recovery has been restricted to nominal damages."

As said in *Suffolk* v. *Hayden* (3 Wall., 320):

"There being no established patent or license fee in the case, in order to

get a fair measure of damages, or even an approximation to it, general evidence must necessarily be resorted to."

And so, if this position of the defendants be correct, the case will turn on the question above stated—what does all of the evidence, considered merely as "general evidence," show the invention to be fairly and reasonably worth per machine? And in considering this question it should be borne in mind, as stated in Addison on Torts, p. 458, that, "if the value of it is doubtful, every presumption is made against the wrong-doer."

As to this question, it is to be observed, in the first place, that the defendants have not offered a particle of evidence to show the actual value of the invention. One of two inferences must be drawn from this course on their part—they evidently considered that the complainant had shown such an established royalty or license fee as rendered "general evidence" on their part useless; or, second, and for obvious reasons, they wanted to avoid any inquiry into the general value of the invention. In either view, their failure to introduce general evidence must at least be considered a tacit recognition of the strength of complainant's case.

If all of the evidence in the case be considered merely as "general evidence," we submit that this court cannot say that the amount claimed as royalty or license fee is anything but reasonable. As already shown, the defendants, in strong and oft-repeated language, recognized and admitted the great value and importance of the features held to be Graham's, saying that they "greatly improved" their machine, making it "much lighter and handsomer, without lessening its strength and durability," and at once placing it "far ahead of all competitors"—so far, in fact, that there was no other machine in the market "fit to be called its competitor." Bearing in mind the prices which have generally been paid as royalties for this class of inventions, a good illustration of which is the price once charged by

these defendants of ten dollars a machine for a raker's seat, which this court, in 16 How., 491, say was "an improvement of small importance," it will readily be seen that five dollars a machine, or even more, would be a very reasonable, not to say a very low royalty for the features now in controversy which have been held to be Graham's, and which the defendants have referred to as "greatly improving" their machine, placing it "far ahead of all competitors," etc. From their own statements, then, a satisfactory deduction can be drawn as to the value of the patented invention; for it needs no argument to show that saving the expense of an under frame on each machine, which the defendants dispensed with when they adopted the Graham invention, was worth more than the royalty now asked by the complainant.

But, without regard to this, there is abundant evidence showing the Graham inventions to be fairly worth at least the amount asked of the complainant, namely, the actual transactions under the patent, which must certainly be considered, even in the light of "general evidence," as more satisfactory than mere opinions or guesses of witnesses. These transactions have already been referred to at length, and so it will now only be necessary to suggest their bearing as "general evidence."

The first two transactions—which took place at an early day, before the market value of the invention was seriously impaired by manufacturers clouding Graham's title through deliberate infringements and persistent insistance in the courts that his patent was void, and at a time when the "parties were presumed to act voluntarily, and therefore to make up their minds deliberately as to what would be a fair price"—provided for the payment of a royalty of ten dollars a machine. It is true, as before explained, that these licenses covered all of Graham's inventions secured by this and two other patents; but, in considering their bearing on the question of value, it should be remembered that "mow-

ers exclusively" were contemplated or manufactured under them (Record, 188-9), and that Graham's other claims related to reapers, excepting the one on the coupling pin, which is unimportant and has never been manufactured, so that the rate of royalty must have been fixed mainly with reference to the two claims now in controversy; and, speaking of these two claims, Graham says that he has "always considered them of pretty much the entire value" of all his inventions. (Record, 188). These being the facts, the only reasonable inference is that "in making up their minds deliberately as to what would be a fair price," the parties then considered ten dollars a machine, or about that sum, to be a fair and reasonable royalty for these two claims.

As already shown, the rate of three dollars a machine was agreed upon in the Wayne Company license because of special circumstances, and while the patent was resting under the cloud of this litigation. All of the facts connected with the negotiation and granting of this license, as well as the fact that the Wayne Company afterwards contended in court "for the right to manufacture under it," show that in this transaction all of the parties considered three dollars a machine a very low estimate of value. And so we submit that, considered merely as "general evidence," this license and surrounding circumstances show the Graham invention to be worth considerably more than three dollars a machine.

The license to the Ann Arbor Company and other similar ones, in all of which the licensees agreed to pay five dollars a machine in case the payments were not made within certain limited times, when the payments would be at the rate of three dollars a machine, also show the invention to be worth at least this amount. And so we submit that, considered merely as "general evidence," every transaction under the patent, from the beginning down, in which the parties can be "presumed to have acted voluntarily, and therefore to have made up their minds deliberately as to

what would be a fair price," shows an estimate of at least three dollars a machine for the invention now in controversy; and in agreeing to pay this rate these several licensees had to consider the fact that, in addition to the usual disadvantages of competing with strong manufacturers, they would be placed at the further disadvantage, as before suggested, of having to pay royalty, while these defendants and other competing manufacturers were ignoring the patent, paying no royalty, and claiming that they never would have to do so. It certainly needs no argument to show that under such circumstances they would all seek to get the price down to the lowest possible figure, and, of course, would be unwilling to pay as much as if the patent had been fairly recognized, and royalty paid under it by other competing manufacturers. These licenses, therefore, considered merely as "general evidence," show the lowest estimate or value that manufacturers could put upon the invention in controversy, even when the royalty was to be paid by some competing with others who paid nothing.

In thus considering the licenses as "general evidence," we have only adverted to the transactions under the patent in which the parties acted voluntarily, and therefore made up their minds deliberately, and not to those in which special matters, such as poverty, litigation or bankruptcy, entered into the arrangement or had an influence on the minds of the parties; but, if this court should hold that the compromise settlements mentioned in the evidence are competent to be considered at all, then we submit that—showing payments in some cases amounting to three or even five dollars a machine, and in others to large and substantial sums, —such compromises cannot be held to impair the value put upon the invention in other transactions. On the contrary, if the parties were willing to pay large sums in compromise of doubtful cases, where successful defenses might have possibly been made, the reasonable inference is that they

considered the invention to be of such value that there would be much larger liabilities, several times larger, in case of final decisions against them. Considering the peculiar nature of patent property, such compromises are generally made at very low figures—say anywhere from ten to fifty cents on the dollar; and so, if proper to be considered at all, the only bearing these compromises and settlements can have on the question of value is to show that the invention was considered as really worth several times the amounts actually paid.

As to the second ground of recovery, therefore, the complainant respectfully submits that he is entitled to damages on the basis of the actual value of the invention, as shown by all the evidence, and that such value is at least three dollars a machine.

CONCLUSION.

In view of all the foregoing, we respectfully submit and insist that the complainant's patent is valid; that the defendants have infringed its first and second claims; that the complainant is entitled to recover three dollars a machine on 32,382 machines; that he is entitled to interest on that sum from the end of each year's infringement, and that, if this cannot be allowed, he is entitled to interest from the date of Judges Drummond and Dyer's decision—March 13, 1880—when the defendants were judicially informed that they were using the complainant's property, and since which time they have never tendered the complainant compensation, to stop interest.

EPHRAIM BANNING,
THOMAS A. BANNING.
Counsel for Appellee.

Supreme Court of the United States.

OCTOBER TERM, A. D. 1888.

No. 108.

CYRUS H. McCORMICK AND NETTIE FOWLER McCORMICK, Executor and Executrix of Cyrus H. McCormick, deceased,
LEANDER J. McCORMICK AND ROBERT HALL McCORMICK,
Appellants,
vs.
PETER WHITMER, Administrator of Hugh Graham, deceased,
Appellee.

Appeal from the Circuit Court of the United States for the Northern District of Illinois.

Supplemental Brief and Argument for Appellee

EPHRAIM BANNING,
THOMAS A. BANNING,
COUNSEL FOR APPELLEE.

EASTMAN BROS., LAW PRINTERS, 187 WASHINGTON ST., CHICAGO.

Supreme Court of the United States.

OCTOBER TERM, A. D. 1888.

CYRUS H. McCORMICK AND NETTIE FOWLER McCORMICK, Executor and Executrix of Cyrus H. McCormick, deceased,
LEANDER J. McCORMICK AND ROBERT HALL McCORMICK,
Appellants,
vs.
PETER WHITMER, Administrator of Hugh Graham, deceased,
Appellee.

Appeal from the Circuit Court of the United States for the Northern District of Illinois.

Supplemental Brief and Argument for Appellee

MAY IT PLEASE THE COURT:

As our other brief was filed in advance of appellants', it is now necessary for us to give brief consideration to some of the points on which a reversal of the lower court's decision is asked.

In the first place, it is with regret that we are compelled to characterize many of the statements in appellants' brief as wholly unwarranted by the record; and, of course, if their statement of facts is found to be unreliable, the court should hesitate about accepting too readily their fine-spun mechanical theories. We do not mean by this that any of their statements supported by the record should be at all discredited, but simply that they should be subjected to the same test that we ask for our own;—"to the law and to the testimony" is the rule we here invoke.

In a charitable view, it may be suggested that appellants' present counsel did not participate in taking a single word

of the evidence, and that, in the press of business, he has probably dictated his brief to a stenographer after only a superficial study of the record. No other proper reason can be assigned for many of his misstatements. But, whatever the reason, the court will certainly agree with us in the view that the facts should be made to appear.

On page 4, in speaking of the question of damages, the learned counsel says that "out of these settlements were selected several instances where the number of machines to be settled for was so small that a payment, insignificant as compared with the cost of litigation, would represent a large rate per machine." Nothing of the kind was done; there was no selection whatever. As explained in our other brief, every financial transaction under the patent was fully disclosed; and, as stated at the time, this was done "so that the Master and court might have full information on the subject." (Record, 179.)

On the same page he says that in these exceptional cases there was executed an instrument reciting that the grantor "*demanded*" five dollars a machine for a certain number of machines theretofore sold, but "accepted" three dollars a machine, if payment was made in accordance with the terms of the instrument. If this is intended to refer to the licenses generally, it is wholly unsupported by the record. The licenses to the Wayne Company, to the Geneva Lake Company, to the Remington Company, and to others, contained no such statements. (Record, 244, 247, 249.) The only place where the word "demands" occurs is in the Ann Arbor license. (Record, 246.)

On pages 4 and 5 it is said that "in one of the several cases the party making the settlement, who was the president of the company with which it was nominally made, was personally given an assignable shop right under the patent." This is supposed to refer to the Geneva Lake Company, which was licensed January 27, 1881, and after-

wards assigned to the John Haskins Manufacturing Company. (Record, 422.) The insinuation that a personal inducement was offered is entirely unsupported by the record.

On page 5 it is said that the company was "released from the payment of one-half of the sum recited in the so-called license." This is without foundation in or out of the record; but it can be excused on the assumption that, in his imperfect knowledge of the facts, counsel has intended to refer to the judgment against the Geneva Lake Company, which was settled for $2,637.50, after the company had become bankrupt, and been sold out at sheriff's sale, as explained on page 109 of our other brief.

On the same page counsel says that the complainant in another case "agreed under bond to protect and hold harmless the grantees in the manufacture of a machine they were then making (not the Graham machine), against a patent owned by a stranger." This is supposed to refer to the Ann Arbor transaction, in which the facts will not bear the construction thus sought to be put upon them.

On the same page he says that "the Master held that these exceptional transactions thus selected and manipulated by the complainant" afforded a measure of recovery. There was no selection, no manipulation; and if appellants' counsel makes this covert insinuation in the expectation of prejudicing the court against complainant, it should certainly fail of its object.

On page 6 it is stated that "the Master found that the complainant had an established royalty of five dollars a machine." The record fails to show that the Master ever found anything of the kind. The Master distinctly says that he finds a royalty of three dollars a machine—not five. His exact language is: "I find that the testimony established a royalty or license fee of three dollars for each machine." (Record, 61.)

On the same page counsel again says that "the damages

thus assessed for a modification relating to a subordinate adjustment in a complicated machine were shown in evidence to be several times the entire profit on the complete machine." This is entirely unfounded, nothing of the kind being shown in the record.

On the same page it is said that "these damages were assessed in behalf of a complainant, who never undertook to manufacture or sell a machine, either in his own behalf or through licensees, during any part of the term of infringement." This is all untrue. The complainant, Hugh Graham, when he bought the patent in 1870, made the patentee, A. B. Graham, his agent, and gave him full authority in the management of the patent (Record, 177, 242); and during the term of the infringement, as well as before, Mr. A. B. Graham was very active. As shown in our other brief (p. 114), he effected a license November 21, 1878, for three dollars a machine to the Wayne Company. This was certainly "during" the infringement.

On the same page counsel says that "there were no transactions in evidence in which this royalty purported to be paid simply for a license under this patent, other than those in which the transaction was in settlement of litigation begun or threatened." This is so contrary to the facts that we leave it for the court to say whether it is at all excusable, even in the charitable way suggested. The Ann Arbor license, explained in our other brief (p. 121), was one where there had never been any infringement; where there had never been any "litigation begun or threatened;" where there was no settlement of any kind or nature; and where there were absolutely no inducements or considerations of any kind or character except the desire to receive the royalty on the one hand, and to use the invention on the other. It was as pure and honest a business transaction as was ever entered into.

The Wayne Company license was also taken before in-

fringement, and no royalties were ever paid under it because of "litigation begun or threatened." The only way in which it was ever affected by litigation was in the licensee's effort to keep it in force—to enforce specific performance of its terms, to the extent of compelling complainant to accept the royalty which it provided for, and thus preclude the possibility of having to pay at a higher rate.

At the bottom of page 16 counsel says that it was common to use "two swivel joints, one connecting the vibratable link with the gearing carriage and the other in the draft-rod, making the pivot connections between these elements and the finger-beam at the rear of the inner end of the finger-beam, or of the shoe on which it rides." A simple inspection will show that there is not a single prior patent in evidence where a swivel joint is used at the connection of the draft-rod with the shoe or finger-beam.

On page 29 it is said that the Zug patent contains "two swivel joints, one in the vibratable link and the other in the draft-rod, so that the finger-beam can both rise and fall at either end, and tilt crosswise or rock forward and backward on the rear pivot to the same extent" as defendant's machine. The court can see whether this is so by an inspection of the Zug patent and reading its specification. No swivel joint is shown or mentioned in the whole patent, and no rocking motion or crosswise tilting, or provision therefor, is anywhere shown or described.

On page 33, in quoting from the Dolph patent, a material statement is omitted. The specification says that "the devices render the cutter-bar and cutters adjustable only so far as raising *one end* at a time." (Record, 351).

On page 35 it is said that the Bartlett patent of 1862 "contains two swivel joints, one where the vibratable link is attached to the gearing frame, as in Graham, and the other in the draft-rod." An examination of the drawings,

particularly Fig. 3, will show that the draft-rod has no swivel joint whatever.

On page 40 it is said that the infringing machine in *Graham* v. *Gammon* corresponded with the patent in suit, "in features in which the present defendants depart from it." This is simply not so; and we venture the assertion that counsel never saw the machine then passed on by Judge Blodgett.

On page 41 counsel argues, in effect, that Judge Blodgett never recognized the Graham patent as providing for an automatic or self-adjusting rocking motion. This feature of the Graham device has been recognized by Judge Blodgett in his decision in the Plano case (33 Fed. Rep., 917), where he says that "the first claim is for the device shown, whereby the finger-beam is *enabled* to rise and fall at either end," etc. It was recognized by Judges Drummond and Dyer in this case, where they say that—

"The first claim is for a combination of the finger-beam with the gearing carriage by means of the vibratable link, the draft-rod, and the two swivel joints M M', so that the finger-beam *may* both rise and fall at either end and rock backward and forward."

On the same page counsel, in order to make the defendant's machine appear to resemble the prior art, says that "the shoe of the defendant's machine rests on the ground as far forward as does the shoe of the Zug or the Bartlett or the Ball." In the Bartlett and the Ball patents the shoe does not rest on the ground at all, but rests and rides on the drag-bar; and by looking at the shoe of the defendant's machine (cut opposite p. 228 of the Record), and the shoe of the Zug machine (cut opposite p. 363 of the Record), the careless or wilful character of this statement will be apparent.

On page 43, in speaking of the Graham 1867 patent, counsel says that "the first claim of this patent is as follows"—quoting a claim that was first made in the applica-

tion and afterwards erased. The claim which he thus quotes, and would have the court consider as the first claim of the 1867 patent, is not found in that patent at all.

On page 50 it is argued that the operator of the infringing machine has no power to lower the points of the guards. But the defendants, in speaking of their own machine, the one held to be an infringement, say: "The cutting apparatus may be rocked on its swivelling pivot joint and held in any desired position to adapt it to rough as well as smooth land, by means of a rocking lever N pivoted to the drag-bar and extending to within convenient reach of the driver." (Record, 281). Again: "Our arrangement for tilting the points of the guards to pick up fallen grain is very ingenious and effective, and at the same time easily managed by the driver." (Record, 222). And still again: "By means of a crank (which may be seen in the cut) at the driver's right hand, the points of the guards and reel may be thrown down to pick up lodged or leaning grass, and by the use of this contrivance the very worst kind of lodged or tangled grain cannot escape the sickle." (Record, 229.) All this shows that counsel is now denying a capacity or movement of their machine which the defendants themselves have repeatedly and publicly emphasized; and we leave it for the court to say which is entitled to the greater weight—appellants' own statement, made before litigation begun, or their counsel's statement, made now.

On page 52 counsel says that "the draft-rod bent upward and reaching the heel from above was shown in the Zug patent." A mere glance at the drawing of the Zug patent will show that this is not so. The drag-bar does not reach either the front or the heel of the shoe.

On page 55 counsel, in speaking of the Saxton license under which the defendants claim to have paid $57,777.50, says that "under this license (which included a large number of patents), royalties were paid on all the machines now

charged to be an infringement of the Graham patent." The impression is here conveyed that these royalties were paid for the use of the features now in controversy. This was not so. The patents included in the Saxton license were the Wheeler of 1854, the Wheeler of 1860, the Wheeler of 1864 —two patents—and the Dodge of 1859. (Record, 426). Defendants did not regard these patents—three of which are prior to Graham—as sufficiently near his invention to present them to the court. They are not printed in the record. Only one of them—one of the Wheeler 1864 patents—is set up in the answer, and none of them were made the subject of evidence—expert or otherwise. They cover other features than those involved in this suit.

On page 55 it is said that Cleveland "put fifteen thousand dollars into the business" of manufacturing the Graham machine. The record is absolutely destitute of anything justifying this statement. The contract between Graham and Cleveland merely provided that "if the said parties shall have obtained a patent for said machine within one year from the date hereof, then the said party of the second part shall and will invest in said business of manufacture, repair and sale of said machines the sum of fifteen thousand dollars." (Record, 237). This is no evidence that Cleveland "put fifteen thousand dollars into the business;" it merely shows that he agreed to do so in case Graham obtained a patent within one year from the date of the agreement, February 4, 1864.

On page 56 counsel says that "in the spring of 1866 Graham made an arrangement with the Werdens to manufacture." The agreement was made November 25, 1865. (Record, 156). This misstatement is perhaps immaterial, but it at least shows carelessness in regard to facts.

On page 57 counsel says that if a machine having the Graham construction encounters a rise in the ground (which he illustrates by some fanciful pictures opposite page 57),

"when it is concealed by the grass or when the driver's attention is off, the guard fingers will plow into it and breakage is likely to result." This contradicts his argument on page 20, where he claims that the draft-rod, pulling the shoe from the front, will at all times hold the points of the guards inclined upward, saying that "the pull of the draft-rod from the front tends to hold the teeth in a line extending toward the front pivotal point of the draft-rod." This front pivotal point is considerably above the plane of the finger-beam. He thus argues on one page that the points of the guards will be held inclined upward, and on another page that they will run into the ground.

On page 58, in speaking of the machines held to be an infringement, appellants' counsel says that "the machines mentioned took the grand prize at the Paris Exposition of 1867—before the Graham patent was granted." The circulars were not speaking of the infringing machines, but of their predecessors, which had also been called the "Advance" and "Prize" mowers.

On page 59 counsel refers to the disclaimer at the end of the Graham 1867 patent, which says that he does not "claim the connecting of the finger bar I to a bar J by a joint *h*, for that has been previously done." In this and at other places in his brief, he says that this disclaimer involved the "swivelling play between the draft rod and the finger-beam," and argues that therefore Graham in his first patent disclaimed the subject matter of his second claim. This is ridiculous. The joint *h* referred to was merely the hinge between the finger-beam and the vibratable link, enabling the beam to be folded up for transportation. This was old, and neither appellee nor his counsel have ever claimed that it was new.

On page 60 it is said that "the crosswise tilt was old, and the swivel joint was the common means for providing for such movement in mowing machines." An examination of

the prior patents in evidence will show this to be incorrect.

On page 60 counsel says that "at least ten or twelve such machines were manufactured during the spring of 1863." The record shows that this is not so; and none of the witnesses so testified. Mr. Graham says that they completed but three or four (Record, 106, 121); and Mr. Porter says he thinks four. (Record, 102-3). Mr. Porter says they "started a dozen" (Record, 102); and from this counsel jumps to the conclusion, without regard to the evidence, that at least ten or twelve "were manufactured."

On page 72 counsel says that "Minskey, who had been interviewed by Graham before he testified, indicated throughout his examination a disposition to adapt his testimony to the complainant's interest as far as possible." This statement about Mr. Graham having interviewed Minskey, and thus biased his testimony, is contradicted by the record; we can find nothing to justify it. Referring to Minskey, Mr. Graham says: "The first I ever knew of his having one of those machines was when he testified in this case." (Record, 136). And, in the next answer he says: "I do not know that he ever had one of them; I do not know where his farm is and never did." Mr. Minskey's only reference to a conversation with Graham was when he bought the machine, *fifteen years before*, and then he is not certain that he talked with him at all. (Record, 331). Out of this account of a possible talk with Mr. Graham at the time Minskey bought his machine, fifteen years before, counsel has apparently attempted to insinuate that Minskey had been recently interviewed by Graham, and his testimony biased. We leave it for the court to say whether this kind of argument is fair or worthy of countenance.

On page 74 counsel quotes from the witness Stearns, where he says that Graham "told him if McCormick sent any agent up there to kind of play off and say that the machine was not worth a damn." Graham on page 137 of the rec-

ord absolutely denies this, and states what the conversation between him and Stearns was, and Stearns himself, on page 337, qualifies and virtually withdraws the language quoted by appellants' counsel.

On page 93 counsel, in one sentence of forty-seven printed lines, brings together so many false and misleading statements that we feel called upon to deny the matter generally as well as specifically. He wholly misrepresents the Master and the Court, and incorporates into his forty-seven line sentence so many insinuations that it is practically impossible to separately and adequately deny them *seriatim*. He says that the Master and the Court assumed that a party might establish a royalty by procuring "exceptional" cases with parties against whom he has "pending suits." They held nothing of the kind. He says that they assumed that "it is immaterial whether that rate was actually paid." They assumed nothing of the kind. He says that they assumed that it was immaterial that a party only paid "on a fraction" of the machines included in his settlement. They assumed nothing of the kind. He says they assumed that it was immaterial, that the officers of the companies were given "a separate consideration that would compensate for all that was actually paid." They assassumed nothing of the kind, and no such case ever occurred. He says that they assumed that it is immaterial that the sum to be paid, or a considerable portion thereof, "was afterwards released." They assumed nothing of the kind. He says that they assumed that it is immaterial that the license was "not acted upon and not intended to be acted upon." They never assumed anything of the kind. He says that they assumed that it was immaterial that the payments were "never for machines made in accordance with the patent, but always for immunity in the sale of machines of different construction." They never asumed anything of the kind, and this statement does not

correctly represent the facts before them. As we have before said, the Wayne Company and the Ann Arbor Company were under no liability whatever, but voluntarily, of their own motion, and at their own earnest solicitation, procured the licenses to them. This whole long indictment of the Master and the Court is as full of false charges and insinuations as an egg is of meat; and it can only be explained on the assumption that counsel has failed to comprehend the grounds of their action.

On page 95 counsel speaks of the transactions under the patent as having been "doctored to meet the exigencies of the case." This is absolutely false, and contains one of counsel's characteristic insinuations. If the licenses under the patent had been "doctored" or manipulated with a view of establishing a royalty to use against the defendants, no slips requiring explanation, as, for instance, the second patent in the Wayne Company license, would ever have occurred.

On page 96 he says that the settlement with the Remington Company, in 1873, was at a rate of about twenty cents a machine. This matter is fully explained at page 102 of our other brief, where it is shown that Mr. Graham received five hundred dollars for a use which the Remingtons assured him involved only "about one hundred machines."

On this same page he says that the Master "assumes that the burden is upon the defendant to show the value of the invention," and quotes the statement of the Master that the defendants had introduced no evidence whatever tending to show the value of the invention. This statement of the Master was simply for the purpose of showing that all of the evidence introduced was by the complainant, and that the defendants had introduced none contradicting him.

On the same page counsel says that there is no instance "in which anybody ever paid or undertook to pay a royalty

of five dollars under this patent," and that the transactions "are compromise settlements." Although unimportant, this statement, as to "five dollars," is not true. The contract with the Ann Arbor Company (Record, 246), and with others, provided for, and the parties agreed to, a payment of five dollars a machine, unless the payments were made promptly at the times specified, in which case the regular royalty was to be three dollars a machine. Nor were these cases "compromises;" for, as before explained, there was no suit whatever against the Ann Arbor Company or the Wayne Company, nor the slightest ground for any. When the licenses were granted there was not, and never had been, anything to compromise.

On page 99 counsel speaks of the Bloom & Waterman contract, "made in 1869." This contract was made January 29, 1870. (Record, 239). This error is immaterial, and is merely mentioned to show counsel's way of stating facts.

On page 101, in speaking of the Sprague settlement, he says that complainant "had his decree against Gammon & Deering for these machines;" but before the settlement was made Mr. Deering testified that only 488 of the machines which they had sold contained the Graham invention. (Record, 460). We have fully explained this settlement in our other brief, pages 104-5.

On the same page counsel attempts to insinuate that underhanded means were employed to procure the Wayne Company license. He says that "Morse, who was dealing in mowing machines in Chicago, and a personal acquaintance of the president of the Wayne Agricultural Company, occupying an office in common with that Company, *was offered by Graham twenty-five per cent of the royalty that should accrue.*" Mr. Morse says that "Mr. Lawrence came to see me in our office on Canal street [Chicago] two or three times." (Record, 218.) This was at Chicago, at Mr. Morse's office. The Wayne Company had no office in Chicago, and

did not share Mr. Morse's office. The only foundation for this statement is in Mr. Morse's reference to the fact that his company occupied one half of the same premises at Louisville, Kentucky, that the Wayne Company did. (Record, 219). Mr. Morse says that the Wayne Company began the negotiations. They came to him, as an acquaintance, about the matter. He induced Mr. Graham to give him a commission on whatever license he effected. We see nothing improper or underhanded in this. A patentee, like anybody else, certainly commits no impropriety in paying a commission on sales effected in his interest; but, in his efforts to prejudice the court, counsel seeks to produce the impression that it was a most questionable transaction.

On this same page counsel says that the license with the Wayne Company was effected "under two Graham patents." Mr. Graham fully explains the second patent mentioned in the license—that it formed no part of the consideration—but counsel ignores his explanation. Our other brief (page 121) fully considers this matter.

On page 102 counsel says, in reference to this license, that the Wayne Company "never made a machine under it, and the license was revoked." This is not so. Graham served a notice of revocation on the Wayne Company, and filed a bill against them for infringement. They thereupon filed answer, insisting that they were manufacturing under the contract, and asking to have it carried out. (Record, 273). Mr. Lawrence, the president of the company, testified that they contended for the privilege of manufacturing under this license (Record, 418), and they paid three dollars a machine under the license—as explained at page 114 of our original brief.

On pages 102-3 counsel says, in italics: "Every transaction is affirmatively shown to have been with alleged infringers against whom suit was then pending, with two exceptions, trivial in character, one of which was an unlimited license for the

term of the patent, without royalty, for five hundred dollars, and the other included another patent, and related to the manufacture of a machine, charged to be an infringement." This statement is absolutely false. The two exceptions referred to are the Glass payment, explained on page 110 of our other brief, and the Wayne Company license, explained on page 114 and following pages. It leaves out of consideration the Ann Arbor license, which, as has been repeatedly explained, was taken by a party who had never infringed, and against whom no claim existed whatever. Under this license, during the last year, before the evidence in this case was closed, the company paid the complainant $1,062.

On page 103 counsel says, in italics, that "every so-called license, and every settlement, on which the Master rests his finding of an established royalty, was effected through the counsel then prosecuting this suit, and every cent paid was collected through such counsel." This is unqualifiedly false; and there is not a word in the record to justify it. We were the counsel for the complainant during all of these years, and we had nothing whatever to do with the negotiating of the Wayne Company license nor the Ann Arbor license, nor the collecting of money under the latter. If we had, however, it would not militate one iota against them. This is one of counsel's characteristic and small insinuations, which seem to be about his caliber.

On page 104 counsel makes a number of statements, in italics, in reference to the settlement with the Geneva Lake Company. He says that the judgment for $4,902.29 "was almost immediately released" after it was entered. This is not true, unless more than four months and a half is "almost immediately." The decree was entered May 10, 1881. It was released September 28, 1881, upon the payment of $2,637.50, the company being bankrupt, as before explained.

He says in the very next sentence that "there was also executed to both the company and its president, *at the same*

time with this release, a grant, severally to the company and to its president, of the right to manufacture and sell under the complainant's patent for the full term of it, without royalty." The grant here referred to is printed on page 453 of the record. Its last clause, which counsel refers to as "a grant, severally," etc., had no relation to the machine in controversy, but was simply intended as an assurance that the parties would not be molested, under the Graham patent, for manufacturing under their own "combined mower and reaper" patent. At the same time their agreement of January 27, 1881 (Record, 247), under which they were to pay royalty on their other machines, containing the Graham invention, continued in force.

On page 104 counsel says, in speaking of the Remington payment of three dollars a machine, that this three dollars a machine "was to be paid only on 1,350 machines, while about 900 additional machines made by the company were released without any payment whatever." These 900 machines here referred to were machines that the Remingtons had sold, most of them to the Geneva Lake Company, and for which the complainant already held a judgment. The others had been sold to the Wayne Company, and the complainant expressly reserves his right to recover for these machines from those companies. (Record, 251).

On page 107 appellants' counsel says that "under this Ann Arbor license but 220 machines have been made." This is false, and without excuse. Mr. Graham testifies that they paid for the year 1883, $1,062.00 for "354 machines sold for the year 1883." (Record, 458).

On page 107 counsel says that the Ann Arbor license was "a license under the Sherwood patent." This is not so. Graham never owned any interest in the Sherwood patent. The only reference to it in the license is in the guaranty against the Sherwood patent "so long as the party of the second part shall manufacture said machines in accordance

with the sample machine shown to the said Alvaro B. Graham," etc. (Record, 246.) Counsel certainly knows the difference between a license under a patent and a guaranty against one.

On page 112 he says that "the Graham ~~invention~~ machine never went into use." This is not so. The Graham invention went into extensive use. The evidence in this record shows that it was used by the Sprague Company, the Remington Company, the Warrior Mower Company, the Geneva Lake Company, the Wayne Company, the Ann Arbor Company, the Johnson Company, the defendants in this case, and others. If he means by the Graham "machine" that the particular machines shown in the Graham patent as to all of its other features and details, it is unimportant whether his statement be true or not. The only material question is as to the invention described and claimed in the first and second claims of his patent.

On page 113 he repeats that "the Master reported that complainant had an established royalty at the rate of five dollars per machine." This is not so. As before shown, the Master reported no such thing, but simply held "that the testimony established a royalty or license fee of three dollars for each machine." (Record, 61).

On page 117 he says that the defendant's machine was worthy of the eulogy pronounced on it in their circulars, "because of the radical differences in almost every feature of construction between it and the Graham machine." The circulars show that the very features embodied in the Graham invention constituted the burden of their song.

Appellants' brief contains many other errors, mistakes, insinuations and charges, which show that it was prepared in disregard of the evidence; but if the court has read our brief to this point, its unreliable character will be sufficiently established.

We have felt the necessity for this review of appellants' brief, to prevent the court from being imposed upon, as well as to insure a decision that will not be on a misapprehension of the facts. We greatly regret the necessity of being obliged to criticise any statement of facts emanating from a member of the bar of this court, and we have endeavored to indulge in gentle rather than severe criticism. But we feel that duty to the court, as well as to our clients, will not permit us to put the case more mildly than we have done.

THE QUESTION OF ABANDONMENT.

The peculiar way in which appellants have presented the evidence relating to the question of abandonment renders further consideration of this subject proper. Before again referring to the evidence, it may be well to recall the fact that ever since the organization of our patent system it has been the policy of the courts to *encourage* experiments. The reason for this is plain—to avoid the patenting or introduction of crude, experimental or impracticable inventions. Nearly half a century ago, Justice Story clearly announced the rule that an invention not "perfected and adapted to use" is not patentable (*Reed* v. *Cutter*, 1 Story, 590; 2 Robb., 90). His language was:

"He is the first inventor in the sense of the Act, and entitled to a patent for his invention, who has first perfected and adapted the same to use; and until the invention is so perfected and adapted to use, it is not patentable. An imperfect and incomplete invention, resting in mere theory or in intellectual notion, or in uncertain experiments, and not actually reduced to practice and embodied in some distinct machinery, apparatus, manufacture, or composition of matter, is not, indeed cannot be, patentable under our Patent Acts; since it is utterly impossible, under such circumstances, to comply with the fundamental requisites of those acts."

Justice Clifford quotes this language in *White* v. *Allen* (2 Fisher, 446), but first says:

"While the suggested improvement, however, rests merely in the

mind of the originator of the idea, the invention is not completed within the meaning of the patent law, nor are crude and imperfect experiments sufficient to confer a right to a patent; but in order to constitute an invention in the sense in which that word is employed in the Patent Act, the party alleged to have produced it must have proceeded so far as to have reduced his idea to practice, and embodied it in some distinct form."

Justice Grier well states the same rule in *Roberts* v. *Reed Torpedo Co.* (3 Fisher, 631), in these words:

"It is when speculation has been reduced to practice; when experiment has resulted in discovery; and when the discovery has been perfected by patient and continued experiments; when some new compound, art, manufacture or machine has been thus produced, which is useful to the public,—that the party making it becomes a public benefactor, and entitled to a patent."

The same idea is thus expressed by Judge Sprague in *Howe* v. *Underwood* (1 Fisher, 166):

"The terms 'being an experiment' and 'ending in experiment' are used in contradistinction to the term 'being of practical utility.' Until of practical utility, the public attention is not called to the invention; it does not give to the public that which the public lays hold of as beneficial."

This rule, that experiments should be *encouraged*, seems so elementary, and so in harmony with sound reason and common sense, that it seems hardly necessary even to mention it; but, in this case, the question is a pertinent one how Mr. Graham was to make the experiments necessary to test his invention—which experiments the law said it was his duty to make—if not in the very way which, as a plain, practical man, he appears to have adopted.

But in every case in which the question seems to have been at all considered, the very course pursued by Mr. Graham has been recognized as proper. This is especially true of the decisions of this court, of which the one in *Elizabeth* v. *Pavement Co.* (97 U. S., 194) is a good illustration; and it has been true of the lower courts ever since the first organization of our patent system.

More than sixty years ago, Justice Story said in *Mellus*

v. *Silsbee* (4 Mason, 108; 1 Robb, 509) the italics being ours:

> "I agree *his acts are to be construed liberally;* that he is not to be estopped by licensing a few persons to use his invention to ascertain its utility, or by any such acts of peculiar indulgence and use as may fairly consist with the clear intention to hold the exclusive privilege."

Whether his acts are "construed liberally" or not, it is clear that Mr. Graham's first arrangements amounted to nothing more than "licensing a few persons to use his invention to ascertain its utility."

> "It would be a harsh limitation of the statutory rights of an inventor which should give the naked infringer the privilege of using an invention because the patentee has attempted, in good faith and in secrecy, to incidentally make his experiments of some pecuniary benefit, while he was patiently endeavoring, amid many failures, to remedy the defects of the machine, test its value, and ascertain whether it could be used advantageously, and whether it ever would be of any benefit either to himself or to the public." (*Jennings* v. *Pierce*, 3 Banning & A. 365).

Applying these principles, the courts have held that, in proper cases, experiments may be made by the sale of experimental machines. A common sense construction has always been put upon the statute in this respect, just as it has in reference to public use. In determining the latter question, for instance, the inquiry embraces two points, additional to the question of time: (1) whether the use was public, in the ordinary way; and (2) whether the invention was then perfected; and so in regard to sales, these same two questions have to be considered: (1) was the invention on sale in the ordinary way; and (2) was it then perfected, or in an experimental stage? If the latter, and a sale was necessary in order to secure a proper test, it could undoubtedly be made. Otherwise there will be two rules, applicable to different inventors, and discriminating against the inventor whose position is such as to render sales necessary for a proper test of his invention.

In addition to the cases cited in our other brief on this point, we now call attention to the following:

In *Innis* v. *Oil City Boiler Works* (22 Fed. Rep., 780) Judge Acheson held that the sale of a machine more than two years before application for a patent, was not sufficient to invalidate such patent, the sale appearing to have been necessary in order to secure a proper test of the invention. The language of the court is:

"The one sale relied on to support the plea was not only characterized by that condition, [a right to return if unsatisfactory], but was otherwise exceptional. It was made at an under price, and without profit to the seller. Moreover, I am persuaded that the sale was made for the purpose of securing a fair test of the invention. . . . 'Running light,' doing no work, at his shop, it was apparently a success; but it could not be satisfactorily tested there. . . . Now, obviously, the only way to determine whether or not the objection [that the piston valve would work loose] was well founded, was to put the engine to work at an oil well and keep it at work there a sufficient length of time. . . . To secure such thorough trial was the principal inducement with the plaintiff to make the sale. Upon the whole evidence it is plain that the transaction was altogether experimental; therefore the invention was not in public use or on sale within the meaning of the statute."

In *Campbell* v. *Mayor*, etc. (9 Fed. Rep., 503), which involved an invention relating to steam fire engines, it appeared that, at the instance of the inventor, the city of Troy used one fire engine embodying the invention more than four years, and another more than two years, before any applica- for a patent was filed. We do not here refer to other sales mentioned in the opinion, the effect of which seems to have been considered with reference to the question of "consent and allowance;" but simply to cases in which the city of Troy, at the instance of the inventor himself, used the invention for more than two years before application for a patent. In reference to these Judge Wheeler said:

"It is contended that these uses and sales, either those with or those without the consent and allowance of Knibbs, will defeat the patent. This invention, like that in *Elizabeth* v. *Pavement Co.*, 97 U. S. 126, could not well be experimented with and tested in private. Its object was connected with purposes in their nature public. Its practice was necessarily somewhat of the same nature. The invention was not essentially varied by the

trials and use made, and was patented according to its features as first applied. Still, it was not clear to the inventor that no changes or modifications would be necessary, and necessary to be specified in the application for a patent, in order to obtain the full benefit of one. In this view, the use by him as engineer, and by the city of Troy at his request, is deemed to have been experimental and allowable within the rule laid down in the case cited."

In *Draper* v. *Wattles* (3 Binning & A., 620-1) Judge Lowell, after stating that the inventor sold two sets of rings containing the patented invention "about six months more than two years before he applied for his patent," says:

"That the use was experimental is sworn to by the inventor, and there is ground for saying that an invention of this sort can be best tested by actual use in a mill; therefore, if the inventor does not happen to own a mill, he must make use of that of another person. . . . The ring which Carrol sold was not the completed and most perfect form of his invention. We think it very doubtful whether in that form the ring would have gone into general use, and that the last and patented article would not be a patentable improvement upon it. . . . The sale or use, to defeat the patent, must have been of the thing patented; and we are of opinion that, in order to defeat the patent, it is not enough to prove that the inventor has sold an earlier and less perfect article—that is, less perfect in the sense of the patent law, even if the thing sold would be within the claim of the patent. In other words, the test is not, necessarily, whether the article sold would infringe the invention by embodying a part of it, but whether it is the invention—that is, embodies the whole of it."

In the light of these authorities and those cited in our other brief, and applying the test, not "whether the article sold would infringe the invention by embodying a part of it, but whether it is the invention"—the perfected invention—it will be material to consider exactly what Graham did in 1863. His first application was actually filed December 4, 1865, and under familiar rules he is at least entitled to have this taken as the date prior to which the two years began to run; so that, in this view, the two years began to run December 4, 1863. Now, what was his condition, and the extent of his operations in 1863?

A poor man, without means, without experience, and

without facilities for experimenting, Mr. Graham makes a valuable invention. It being absolutely impossible for him to develop or perfect his invention otherwise, he goes to Porter & Bro., old friends, and induces them to build three or four of his new machines. His circumstances were such that, however counsel may seek to discredit his testimony, the court cannot doubt that his following statements are literally true.

"Q. 24. Why did you make the arrangements which you refer to in your other deposition with Porter & Bro. and Cleveland in reference to making your machines? A. Because I hadn't the means within my control to make my experiments and to bring my machine up to a success.

"Q. 25. If you had not made these arrangements or others of a similar nature, would it have been possible for you to have ever completed your invention or reduced it to practice or not? A. It would not. I was destitute of means. I had a quarter of a section of wild land in Iowa, which at that time, I suppose, was worth about $500. This constituted my resources at that time. That is the land the mortgage was given on to secure the note spoken of in my testimony before, and I finally lost the land for the taxes on it.

"Q. 26. In your arrangements with Porter & Bro. or Cleveland, were you or were you not to have the control or management as regards sales? A. My recollection is that I had no control of the business, either with Porter & Bro. or Cleveland.

"Q. 27. Then did you or did you not have any control of the machines which Porter & Bro. had on hand when your arrangement with them was closed in the fall of 1863, or anything to say in reference to such machines until your next arrangement with them? A. I did not.

"Q. 28. As I understand you, you say it was necessary that you should make arrangements of this kind giving the practical control of a limited number of machines when manufactured to other parties. Is that correct? A. It is." (Record, 138).

Now, on these facts, we submit that it was perfectly proper for Mr. Graham to make the arrangement with Porter & Bro. under which all the 1863 operations were conducted. In the words of Justice Story, already quoted, the arrangement was, at most, merely "licensing a few persons to use his invention to ascertain its utility." If it was not proper for him to make such an arrangement, then we respectfully

but very earnestly ask the court to point out how an inventor in such position can arrange for proper experiments to test the practical utility of his invention.

Mr. Graham further explains the necessity he was under of having his machines tested by farmers, in exactly the way they were tested, as follows:

"I had the difficulties usually attending such enterprises. I had neither means nor facilities for putting any ideas into practical form, and in this particular line of invention or experimenting the season for practical operation, testing different methods for the accomplishment of the object, is very short—only a few weeks, at most, during the year that the mechanism could be tested practically. It is not like a thing a man can experiment on every day in the year. In addition to that, the farmer's time is very valuable to him, and I found it almost an impossibility to induce farmers to try my experiments. Of course, the market was supplied with what were known as standard machines in the same line, and all well represented in the market, and it required a good deal of pressure to persuade a farmer to take the chances on his crop, perhaps, and the possible loss of his time while giving them a trial.

"Q. 15. What did you have to do in order to get your machines tried, particularly in 1863 and 1864? A. I had to almost offer to give them away; I had to agree to let them have machines at very low prices compared with machines in the market, in the event that the machines were successful, and if not successful, they were our property.

"Q. 16. Was this the only way you could get them tried, or did you have horses, or money with which to hire horses, to try them yourself, and was it necessary or not for you to make such offers in order to get them tried? A. I did not have horses, nor money to hire them. It would seem that it was pretty near necessary, to say the least, to offer these inducements, at the same time having the satisfaction of knowing that the trials would be made practically when they were made; in fact, it was almost a fight to get a farmer to take a machine and give it a trial, even upon those conditions.

"Q. 17. Did you have any other way of trying your machine or getting them tried or not? A. I did not." (Record, 113, 114).

He also says that "the trials were under my personal supervision" (Record, 111), and in answer to the question whether, during the time the machines were being tried in 1863 and 1864, he was "looking after them personally and

endeavoring to correct and improve them as might appear necessary," he says:

"A. I was; I devoted my entire time, night and day, to that object, except, perhaps, very late in the season of 1864, through a little misunderstanding between myself and Mr. Cleveland. I did not have anything to do with the machine taken out and tried by Mr. Ward. I was constantly with the machine or in the shop, making such changes as the case in hand seemed to require, trying various methods to overcome the difficulties." (Record, 112).

These facts are reiterated through a long examination and cross-examination, and the defendants have not offered a word of contradictory evidence, or a word to show how Mr. Graham could have made his experiments in any other way. The defendants themselves having failed to do so, are hardly in position to ask the court to point out any other way by which Mr. Graham could have developed and tested his machine than the one he adopted; but if this way was not proper, the public at large are interested to know exactly what course should be pursued by an inventor in such circumstances.

It is also clear, beyond question, that the 1863 machines were so imperfect that they cannot be considered as having embodied the perfected invention; and, therefore, in no possible view can it be said that the perfected invention was on sale or in public use during that year, or more than two years before application for a patent was actually filed. On this point, as indeed on all material points, we respectfully ask the court to read carefully everything contained in the record. Our present statements must necessarily be brief, so that we can do but little more than suggest the points; but a careful study of the record will show, beyond question, that, in addition to Mr. Graham's operations being experimental, his first machines were very crude and imperfect. As to this—that his first machines were very crude—Mr. Graham says—and he is repeatadly corroborated by other witnesses:

"X Q. 19. Had you any intention of taking out a patent in January, 1863, for the mower you intended to build? A. I certainly had.

"X Q. 20. Why did you wait until 1864 before moving in the matter? A. I preferred to experiment to some extent to determine whether my ideas would be practical when put to the test.

"X Q. 21. And you didn't intend to take out a patent until you found that the devices contemplated and embodied in your mower were a success? A. Not until I found they were practical; unfortunately for me, perhaps, I had understood that they must be practical in order to secure a patent.

"X Q. 22. And your experience and use of the mowing machines, as you build them in connection with Porter & Bro., before and during the summer of 1863, convinced you that you had a practical and successful machine; is not that a fact? A. It so convinced me, with certain alterations which those experiments suggested.

"X Q. 26. The joint and connection which you have described, as connecting the draft-rod with the shoe in the machines built by you and Porter & Bro. in the year 1863, allowed free tortional movement, and was substantially a swivel joint, and your lugs and pin on the shoe, as connected with the draft-rod, were designed for swivel purposes, were they not? A. Those joints admitted of the movement, but I should consider them very crude compared with the joints that I put in their stead in my model of 1863 and 1864, especially in connection with the clear V spoken of before, which to me at that time seemed to be a necessity.

"X Q. 27. But these joints admitted of a free play of the finger-bar over irregularities of surface, and of its rising and falling at either end, did they not? A. To a certain extent. But in very abrupt irregularities of the surface there was a confliction with other parts that the newer joint overcame.

"X Q. 28. Do you wish the court to understand that these joints, or the manner of attaching the draft-rod to the shoe, interfered at all with the success of that machine, as built in 1863? A. With the attachments connected with it in 1863 I understand very distinctly that there was an interference, very materially, with its free action." (Record, 118–120).

"X Q. 59. Do you deny that your mower, as operated on the Dooley farm in 1863, was a practical working machine? A. I do, most emphatically.

"X Q. 60. You didn't find it out until some time after this suit was begun, did you? A. I found it out very early in the harvest of 1863, on Mr. Dooley's farm, and never was known to have denied that it was a failure." (Record, 123).

"X Q. 64. They were practical working machines, and did good work in the grass field in 1864, did they not? A. I have stated that in light

grass they did tolerably well while they staid together, but in heavy grass not so.

"X Q. 65. How many of those mowers did you put out which were run in the grass field of 1864? A. . . . The facts were, it was about an impossibility to get a farmer to take one of them out; they were considered by the farming community unworthy of an attempt; that was my experience with them at the time." (Record, 124).

On this point, also, we think it proper to present, as authority, the opinion of able counsel who have opposed the Graham patent in another case—the one against the Plano Company. In this case Messrs. Coburn & Thacher, whose reputation and ability are well known in this court, took the position, on substantially the same evidence as now presented, so far as this question is concerned, that Graham's early operations were not even sufficient to entitle him to protection back to 1863. In other words, they contended that another party, whose machine was first tested in the summer or fall of 1863, was ahead, and that all Graham's operations should have been considered as being purely experimental until 1865. In order that their position may appear in their own words, we here quote from their brief, used before Judge Blodgett in the case referred to; but we thus present their views simply as authority—entitled to much weight, although not as much perhaps as a court's decision—and as showing how unsatisfactory the facts in question are, when sought to be twisted out of their natural shape to suit the object of particular counsel in particular cases. In their brief in the Plano case, Messrs. Coburn & Thacher say, the italics being ours:

"According to Mr. Graham's own statement, *he did not have his invention reduced to practice until 1865*. Bramer's reduction to practice and the public use of a successful machine was in the summer of 1863, and his production of the 1862 machine is established by five witnesses. Now we contend that the evidence shows that Bramer was the first to invent his machine; *the first certainly to reduce it to practice*, the first to commence the manufacture and sale of the machine, and the first to apply for and obtain a patent."

Judge Blodgett, however, differed with them as to the effect of Bramer's operation.

Of course, if Mr. Graham "did not have his invention reduced to practice until 1865," all his earlier operations were experimental. Where able counsel, all interested in defeating the patent, can thus differ as to the effect of Graham's earlier operations, can the courts say that the defense in question is made out with that clearness required by the rule of *Coffin* v. *Ogden* (18 Wall. 124), as follows—the italics being ours:

> "The invention or discovery relied upon as a defense *must have been complete and capable of producing the result sought to be accomplished;* and *this must be shown by the defendant.* The burden of proof rests upon him, and *every reasonable doubt should be resolved* against him. If the thing were embryotic or inchoate; if it rested in speculation or experiment; if the process pursued for its development had failed to reach the point of consummation, it cannot avail to defeat a patent founded upon a discovery or invention which was completed, while in the other case there was only progress, however near that progress may have approximated to the end in view *The law requires not conjecture, but certainty.*"

Without regard to the fact that able counsel differ as to the effect of Graham's early operations, which is immaterial except by way of authority or argument, we respectfully submit that any possible construction of the evidence will show that Graham's invention was not "complete" in 1863; that it was then "an experiment," and that, in a practical view, it was not "capable of producing the results sought to be accomplished."

On page 76 of his brief, counsel for appellants has made a very earnest and adroit effort to discredit Mr. Graham's testimony in reference to his early operations; but, if everything is considered, we believe his attempt will be found to have completely failed. Of course, it is possible to take a part here and a part there, and, leaving out other statements or explanations, twist anything into almost any shape desired; but, if this question be at all material, we simply ask

that Mr. Graham's entire statements may be read and considered in the light of corroborating testimony and circumstances. The particular matter in which counsel makes his main attack on Mr. Graham is itself capable of a natural, reasonable, and, as we believe, true explanation.

The substance of counsel's statement is that Graham is three times contradicted, over his own signature, in reference to the time when he first knew that his first applica- was not filed promptly. The first thing to which he here refers is the contract with the Werdens, of November 25, 1865, and the second is the assignment of the same date. In each of these instruments it is recited that Graham is "about" to make application for a patent, and from this counsel assumes that he must have known that he had not already made such application. Passing the fact that he was contemplating filing *another* application, for other improvements (Record, 115), which would make his "about" statement literally true, it appears that, as to formal parts, the Werden instruments in question were literally copied from the Cleveland contract of February 4, 1864. After the opening clause, the Cleveland contract recites "that, whereas, the said party of the first part has invented a combined reaping and mowing machine, known and called the 'Champion Machine,' for which invention an application is about to be made to the Patent Office at Washington, D. C., for Letters Patent" (Record, 236); and, after the opening clause, the Werden contract recites "that, whereas, the said party of the first part has invented a combined reaping and mowing machine known and called the 'Champion Machine,' for which invention an application is about to be made to the Patent Office at Washington, D. C., for Letters Patent." (Record, 156). It further appears that whole material paragraphs in the Werden contract are literally copied from the Cleveland contract; so that it is clear that the Cleveland instrument was then used as a gen-

eral form, and this explains how the general recital containing the word "about" came to be used. The assignment being drawn at the same time would naturally adopt the same general form of recital.

There is intrinsic evidence that the power of attorney to Renwick, to which counsel attaches importance, was drawn in New York and sent to Graham for execution; the interviews with Renwick, had through W. B. Werden, were at New York (Record, 115), while the power of attorney appears to have been executed at "Waukegan, Ill." (Record, 411). This being the case, it was certainly not very strange if the simple recital of a date, not then considered important, should have failed to attract attention or impress itself upon Mr. Graham's mind.

There are other circumstances, shown in the record, strongly corroborative of Mr. Graham's statements. For instance, the Cleveland contract, which was made February 4, 1864, contemplated Graham's obtaining a patent *within one year*, and held out a very strong inducement for him so to obtain it if possible. As expressed in the agreement, this inducement was that "if the said parties shall have obtained a patent for said machine, within one year from the date hereof, then the said party of the second part [Cleveland] shall and will invest in said business of manufacture, repair and sale of said machines the sum of fifteen thousand dollars, to be used in said business annually," etc. (Record, 237).

This clearly shows that it was then undersood that the application for a patent should be prosecuted vigorously, and the fact that Graham immediately afterwards proceeded to have his first application put in shape—it was sworn to February 25, 1864—shows that the proceedings were so started. Additional to this, Graham thus states his position at that time: "I was very desirous of getting out my patent, as I looked upon it as my capital or stock in trade. When-

ever I would approach a man to join me in the enterprise, the uncertainty of my obtaining a patent was one of the strongest objections that was raised." (Record, 108). Can it be supposed that under these circumstances, in 1863 having borrowed the money to make his application, and in 1864 having the assistance of a man of means, Graham knowingly withheld his first application, or allowed it to be withheld by his solicitors?

In our view, then, we think counsel's attack on Mr. Graham entirely uncalled for, and unsupported by the record. But even if we are wrong in this, the point is comparatively unimportant—except on the question as to whether Graham's first application should be considered as filed at the time it was executed and placed in the hands of his solicitors—which has never been the foundation of any decision or finding—there is abundant evidence to corroborate him in every other material point. That he was a poor man, without experience, without manufacturing facilities, without any other ways of developing or testing his invention than those employed, appears beyond the possibility of question.

The insinuation that Mr. Graham "showed no disposition" to furnish other evidence than his own statement is directly opposed to what we have always understood to be the actual facts, as shown by the record. As it is possible, however, that we may have misunderstood the effect of our own acts, we call special attention to what the record shows on this point (127-8), as follows:

In cross-examination, Mr. Graham was asked if he was willing to let Munn & Co. or Renwick, who had acted for him in confidential relations, give their testimony; and at first he said that he was "not prepared to answer that question" without giving it a "little thought." After recess he stated that he had no objection to their "placing all of my letters in relation to my application for patents upon the record,

and their statements as to the facts, upon such conditions" as his counsel should name, and added that his previous hesitation was because he understood "that the parties named in those questions were retained as experts by the defendants, and that they have to some extent assisted in working up the defense to this suit." As counsel, we thereupon offered to permit Munn & Co. and Renwick's *ex parte* statements, in the form of letters, to be introduced as evidence; and of course it is reasonable to suppose that in such *ex parte* statements, everything in which any remissness was claimed had been explained as favorably to themselves as possible. We also offered to permit Munn & Co. or Renwick to be examined as witnesses, on the simple condition that their depositions should be taken in such a way as not to make unnecessary expense. Now, we leave it for the court to say whether in all this Mr. Graham was showing any "disposition" to keep back facts.

THE GRAHAM 1867 PATENT.

The effect of Graham's first patent, as a ground of defense, is fully considered in our other brief; but since appellants seem to consider it very important, it may be proper to notice it further.

The only ground on which it has ever been said that an inventor can not take out a patent on new subject matter, described in a patent already issued, is that by his failure to claim it in his first patent he abandons or dedicates it to the public. But, as this court said in *Suffolk Company* v. *Hayden* (3 Wall., 315), a pending application "repels any inference of abandonment or dedication from the omission to again claim it." In *Miller* v. *Brass Company*, and other reissue cases, two years has been suggested as a reasonable time within which a patentee can come back and claim subject matter described but not claimed in his original patent; in other words, these cases proceed on the theory that no

presumption of abandonment arises until two years after the original grant. By analogy to this, it seems reasonable that a patentee should be allowed to come back and claim, within a reasonable time, subject matter described but not claimed in his first patent; and there are numerous decisions to the effect that he may do this, of which the following will furnish illustrations:

"I am much inclined to think that the mere fact that a new article is shown in the drawings of a patent for a machine would not of itself be an abandonment of the new article, which would properly be the subject of a different patent, until the statutory forfeiture of use for two years had been incurred." Lowell, J., in *Hatch* v. *Moffit*, 15 Fed. Rep., 255.

"The fact that the complainant showed a feature analogous to the function and operation of this feature in one of his earlier patents did not, I think, preclude him from taking this patent, under the rule laid down in *Graham* v. *McCormick*, 11 Fed. Rep., 859, and the cases there referred to." Blodgett, J., in *Wilson* v. *Cubley*, 26 Fed. Rep., 157.

"The question we have to decide is whether the description of another invention in a prior patent by the same inventor forfeits his right to take out a subsequent patent for such invention. I do not understand that the Supreme Court have held that such prior description is a dedication to the public of the second invention. The invention of a machine, and a process employed in the use of the machine, being different things, it is difficult to see how the application for a patent on one should operate as an abandonment of any claim to a patent on the other; provided, of course, the application for the second patent is made before the statutory forfeiture of two years' prior use has run. This view is in harmony with the decisions of the Circuit Courts where the question has arisen. *Vermont Farm-machine Co.* v. *Marble*, 19 Fed. Rep., 307, 20 Fed. Rep., 117; *Graham* v. *McCormick*, 11 Fed. Rep., 859; *Graham* v. *Geneva Lake C. Manuf'g Co.*, Id., 138; *McMillan* v. *Rees*, 1 Fed. Rep., 722; *Hatch* v. *Moffit*, 15 Fed. Rep., 252; *Cahn* v. *Wong Town On*, 19 Fed. Rep., 424; *Collender* v. *Griffith*, 18 Blatchf., 110, 2 Fed. Rep., 206. The patent in suit having been applied for within two years from the date of the machine patent, there was no abandonment of the second invention, though a description of such invention was found in the prior patent." Colt, J., in *Eastern Paper Bag Co.* v. *Standard Paper Bag Co.*, 30 Fed. Rep., 65.

"The question has been very fully considered, and the authorities, including *Mahn* v. *Harwood*, reviewed in *Eastern Paper Bag Co.* v. *Standard Paper Bag Co.*, 30 Fed. Rep., 63. The conclusion was there reached that such description in a prior patent does not, of itself alone, invalidate a subsequent patent for the invention so described, applied for in

due season." Wheeler, J., in *Holmes Electric Protective Co.* v. *Metropolitan Burglar Alarm Co.*, 31 Fed. Rep., 562.

In this case, however, appellants' counsel asks that subject-matter claimed in an application filed nearly five months and a half before *any* patent was issued shall be considered as abandoned, notwithstanding the rule that the filing and pendency of the second application "repelled any inference of abandonment." If others can be allowed to come back within two years after the issuance of a patent, and claim subject matter which they described but failed to claim at first, as the above cases say they may do, certainly Graham could come more than five months before his first patent was issued and do the same. But this whole matter is so clear that we cannot believe appellants' position entitled to serious consideration.

Counsel's own position with reference to licenses shows the complications which would arise if the rule he is contending for as to abandonment should be adopted. In such case, if the scope of the license is to be determined by the description part of a patent, rather than by its claims, endless confusion will arise. A license under an old patent describing an invention generally may be considered or construed as extending to all possible improvements subsequently made thereon, if counsel's position be correct. This is well shown in this case, by appellants' attempt to make a pretended license from one patent extend to another.

THE WERDEN MATTER.

In considering the effect on the patent sued on of the 1867 patent to Graham and the Werdens, counsel, on page 87 of his brief, says that "if this second patent is valid in respect to the first two claims, this complainant has, by a species of jugglery, appropriated what had been already assigned to the Werdens, or those claiming under them," and in other statements on this matter conveys the impres-

sion that Graham committed a fraud on the Werdens by withdrawing the subject matter of the claims sued on from his first application..

If he had committed a fraud on the Werdens in withdrawing these claims and making them the subject of another application, the Werdens would have their remedy. It would not affect the validity of the patent sued on, no fraud being practiced on the Government. But the withdrawal was made with the knowledge and consent of the Werdens, in the interest of all the parties and under the advice of eminent counsel—Mr. Renwick.

Mr. Graham says:

"In the fall of 1866 Mr. William B. Werden, who was then interested with me in the machine, went to New York, and through a friend of his he made the acquaintance of Mr. E. S. Renwick. I had determined to get a new solicitor, and instructed Mr. Werden to find one and lay the case before him personally. He laid the case before Mr. Renwick, with the view to an appeal in the Patent Office; also saying to him that I was about to make an application for other improvements on the same machine. Renwick advised me, through Werden, to withdraw that portion that is comprised in the first and second claims of the patent now in suit, and embrace them in the application about to be made, as the cheaper and better course to pursue." (Record, 115).

In cross-question 117 he was asked:

"Isn't it a fact that your principal object and aim in taking out this Feb. 11, 1868, patent was to beat the Werdens out of the claims and inventions which you had shown in the 1867 patent and obtain those claims personally to yourself, although you were in duty and honor bound by your contract with them to convey to them whatever invention there was in the 1868 patent, as far as that patent relates to the first and second claims? Wasn't that the real object of the 1868 patent, and the real reason why you didn't follow the advice of Messrs. Munn & Co., and appeal?

"A. It was not, and if they intimate such an intention I brand it as a falsehood. It was not in any sense my object in changing solicitors, or my object in changing my course from an appeal to the course finally pursued, and up to the time that we received advice from Mr. Renwick I was not aware that it was possible for us to proceed in any way except by appeal." (Record, 131).

None of this evidence is contradicted. Mr. W. B. Wer-

den corroborates it by admitting that he conducted the correspondence with Mr. Renwick "in reference to the proceedings in Patent Office in obtaining the patent in suit, as well as the one issued July 23, 1867," and said: "I saw him personally about every application, I think, and sometimes more than once." (Record, 318).

All this shows that there was no "jugglery" or fraud on the Werdens. Under the contract between them and Graham their rights depended on the fulfillment of their agreement and not on the particular name under which the patent issued. And the defendants, in taking a license from them after the commencement of this suit, were bound to inquire whether they had fulfilled their part of the contract. As a matter of fact, their agent was fully informed by Mr. Werden. (Record, 318).

In view of the many misstatements contained in appellants' brief, we again respectfully but very earnestly ask that the record be consulted in reference to every material question. We believe a study of the record will show the merit of Mr. Graham's position better than it can be shown in any other way.

EPHRAIM BANNING,
THOMAS A. BANNING,
Counsel for Appellee.